BRISTA COMMONS, BUILDING TWO

3160 GULF OF MEXICO DRIVE
LONGBOAT KEY, FL



ABBREVIATIONS

Periods only used on one word abbreviations, if the abbreviation is a different word by itself; e.g. ARCH., BIT., and LAM. Periods are usually used when abbreviating multiple words, unless they are very common without periods; e.g. AFF, HVAC, R/A, and WWM.

A	A.B.	ANCHOR BOLT
	ABV	ABOVE
	A/C	AIR CONDITIONING
	ACC	ACCESS
	AC.T.	ACOUSTICAL TILE (CLG)
	AFF	ABOVE FINISH FLOOR
	A.D.	AREA DRAIN
	ADD	ADDENDUM
	ADH	ADHESIVE
	ADJ	ADJUSTABLE
	AGG	AGGREGATE
	A.H.U.	AIR HANDLING UNIT
	ALT	ALTERNATE
	ALUM	ALUMINUM
	A.P.	ACCESS PANEL
	APX	APPROXIMATE
	ARCH.	ARCHITECT(URAL)
	ASPH	ASPHALT
	A.T.	ASPHALT TILE
	AUTO	AUTOMATIC
	AVG	AVERAGE
	AWNG	AWNING
B	B36	36" WIDE BASE CAB.
	BD	BOARD
	BF	BI-FOLD (DOOR)
	BIT.	BITUMINOUS
	BLKG	BLOCKING
	BLDG	BUILDING
	BLK.	BLOCK (CMUs)
	BLKG	BLOCKING
	BM	BEAM
	B.M.	BENCH MARK
	BP	BI-PASS (DOOR)
	BRG	BEARING
	BRK	BRICK
	B.S.	BOTH SIDES
	BSMT	BASEMENT
	BTM	BOTTOM
	BTWN	BETWEEN
	BVL	BEVELED
	B.W.	BOTH WAYS
C	CAB	CABINET
	CEM	CEMENT
	CER	CERAMIC
	CF	CUBIC FOOT
	CHAM	CHAMFER
	C.I.P.	CAST-IN-PLACE CONC
	CIR	CIRCLE
	CIRC	CIRCUMFERENCE
	C.J.	CONTROL JOINT
	CL	CLOSET OR CENTER LINE
	CLG	CEILING
	CLR	CLEAR(ANCE)
	CLS	CLOSURE OR CLOSER (DOOR)
	CMU	CONCRETE MASONRY UNIT
	C.O.	CASED OPENING
	COL	COLUMN
	COMB	COMBINATION
	CONC	CONCRETE
	COND	(AC) CONDENSER
	CONST	CONSTRUCTION
	CONT	CONTINUOUS
	CONTR	CONTRACTOR
	CORR	CORRUGATED
	CPT	CARPET
	CSMT	CASEMENT
	C.T.	CERAMIC TILE
	CTR	CENTER OR COUNTER
D	D	DRYER
	DBL	DOUBLE
	DECO	DECORATIVE
	DEM	DEMOLISH, DEMOLITION
	DET	DETAIL
	DH	DOUBLE HUNG
	DIAM	DIAMETER
	DIM	DIMENSION
	DN	DOWN
	DR	DOOR
	DS	DOWNSPOUT
	DTL	DETAIL
	DW	DISH WASHER
	DWG	DRAWING
	DWR	DRAWER
E	EA	EACH
	E.J.	EXPANSION JOINT
	EL	ELEVATION
	ELEC	ELECTRIC(AL)
	EQ	EQUAL
	EST	ESTIMATE
	EXG	EXISTING
	EXT	EXTERIOR
F	FAS	FASTEN(ER)
	F.B.O.	FURNISHED BY OTHERS
	F.D.	FLOOR DRAIN
	F.E.	FIRE EXTINGUISHER
	F.F.	FINISH FLOOR (LINE)
	F.G.	FIXED GLASS
	FIN	FINISH
	FLG	FLASHING
	FLR	FLOOR(ING)
	FN	FENCE
	FND	FOUNDATION
	F.O.	FACE OF
	FP	FIREPLACE
	FR	FRAME(D)(ING)
	FTG	FOOTING
	FUR	FURRED(ING)
G	GA	GAUGE
	G.B.	GYPSUM (WALL) BOARD
	G.C.	GENERAL CONTRACTOR
	GD	GRADE OR GRADING
	G.D.O.	GARAGE DOOR OPENER
	GFI	GROUND FAULT INTERRUPTER
	GL	GLASS OR GLAZING
H	42"H	42" HIGH (WALL)
	HB	HOSE BIBB
	H.C.	HOLLOW CORE
	HD	HEAD
	HDR	HEADER
	HDW	HARDWARE
	HGT	HEIGHT
	H.M.	HOLLOW METAL
	HORZ	HORIZONTAL
	HR	HOUR
	HS	HORIZONTAL SLIDER
	HVAC	HEATING/VENTILATING/AIR COND.
I	I.D.	INSIDE DIAMETER
	I.L.O.	IN LIEU OF
	INSUL	INSULATED(TION)
	INTR	INTERIOR
J	JST	JOIST (FLOOR OR ROOF)
	JT	JOINT
K	KD	KNOCKDOWN (CEILING)
	KIT	KITCHEN
	KO	KNOCKOUT
	KPL	KICKPLATE (ON DOOR)
	K/S	KNEE SPACE
L	LAM	LAMINATE(D)
	LAV	LAVATORY (SINK)
	LIV	LIVING
	LL	LIVE LOAD
	LT	LIGHT
	L.T.	LAUNDRY TUB
	LTL	LINTEL
	LVL	LAM VENEER LUMBER (BEAMS)
	LVR	LOUVER
M	MAX	MAXIMUM
	MAS	MASONRY
	MATL	MATERIAL
	MC	MEDICINE CABINET
	MECH	MECHANICAL
	MFR.	MANUFACTURER
	MH	MANHOLE
	MIN	MINIMUM
	MIR	MIRROR
	MISC	MISCELLANEOUS
	MLD	MOULDING
	M.O.	MASONRY OPENING
	MTL	METAL
	MT	MOUNTED(ING)
	MULL	MULLION OR MULLED
N	N/A	NOT APPLICABLE
	NIC	NOT IN CONTRACT
	NOM	NOMINAL
	NTS	NOT TO SCALE
	NGVD	NAT. GEODETIC VERTICAL DATUM
O	OA	OVERALL
	OBS	OBSCURE (GLASS)
	O.C.	ON CENTER
	O.CAB.	OVERHEAD CABINET
	O.D.	OUTSIDE DIAMETER
	O.G.D.	OVERHEAD GARAGE DOOR
	OH	OVERHEAD
	OPNG	OPENING
	OPT	OPTIONAL
	OSB	ORIENTED STRAND BOARD
P	PAR	PARALLEL
	P.BD.	PARTICLE BOARD
	PC CONC	PRECAST CONCRETE
	PED	PEDESTAL (SINK)
	PL	PLATE (HEIGHT)
	P.LAM.	PLASTIC LAMINATE
	PLAS	PLASTER
	PNL	PANEL
	PNT	PAINT(ED)
	PR	PAIR (OF)
	PREFAB	PREFABRICATED
	PSF	POUNDS PER SQ FOOT
	PSI	POUNDS PER SQ INCH
	PT	PRESSURE TREATED (WD)
	PVC	POLYVINYL CHLORIDE
	PLYWD	PLYWOOD
Q	Q.T.	QUARRY TILE
R	R	RISER (ON STAIRS)
	R/A	RETURN AIR
	R.B.	RUBBER BASE
	RAD	RADIUS
	RD	ROOF DRAIN
	REF	REFRIGERATOR
	REQ	REQUIRED
	REV	REVISION(S), REVISED
	REINF	REINFORCED(ING)
	RJB	REINFORCED JUNCTION BOX
	RM	ROOM
	R.O.	ROUGH OPENING
	R.O.W.	RIGHT OF WAY
	R&S	ROD AND SHELF(S)
S	SC	SOLID CORE (DOOR)
	SCH	SCHEDULE
	SD	SMOKE DETECTOR
	SEC	SECTION
	S.F.	SQUARE FEET
	S.G.D.	SLIDING GLASS DOOR
	SH	SINGLE HUNG
	SHT	(DRAWING) SHEET
	SHTHG	SHEATHING
	SIM	SIMILAR
	SL	SIDELIGHT OR SLEEVE
	SPEC	SPECIFICATIONS
	SPK	(AUDIO) SPEAKER(S)
	S.ST.	STAINLESS STEEL
	STD	STANDARD
	STO	STORAGE
	STL	STEEL
	STR	STRUCTURAL
	SQ	SQUARE
T	T	TREAD (AT STAIRS)
	TB	TOWER BAR
	TBD	TO BE DETERMINED
	TEMP	TEMPERED
	T&G	TONGUE & GROOVE
	TEL	TELEPHONE
	THK	THICK(NESS)
	TOC	TOP OF CONCRETE
	TOM	TOP OF MASONRY
	TOW	TOP OF WINDOW
	TP	TOILET PAPER HOLDER
	TV	TELEVISION OUTLET
	TYP	TYPICAL
U	UC	UNDERCUT(DOOR)
	UNO	UNLESS NOTED OTHERWISE
V	VB	VB VANITY BASE
	VB	V.B. VAPOR BARRIER
	VERT	VERT. VERTICAL
	VT	V.T. VINYL TILE
W	W	WIDE OR WASHING MACH
	WC	WATER CLOSET
	WD	WOOD
	WF	WIDE FLANGE (STL BEAM)
	WH	WATER HEATER
	WIC	WALK-IN CLOSET
	WIN	WINDOW
	W/ W/O	WITH OR WITHOUT
	WP	WATERPROOF(ING)
	WS	WATER SOFTENER
	WWM	WELDED WIRE MESH

SYMBOLS

- ELEVATION KEY OR SECTION KEY SHEET NUMBER
- DETAIL NUMBER OR SECTION KEY SHEET NUMBER
- ANGLE
- CENTERLINE
- HB — HOSE BIBB (FREEZE PROOF)
- GAS LINE STUB
- PENNY
- PERPENDICULAR
- PL — PLATE
- Ø — ROUND OR DIAMETER

- EARTH
- SAND OR GRAVEL FILL
- WOOD STUD PARTITION
- 3-2X4 WOOD POST OR 2-2X6 UNLESS OTHERWISE NOTED
- BRICK
- CONCRETE BLOCK
- CONCRETE
- STEEL
- DIMENSIONAL LUMBER
- BLOCKING
- FINISH GRADE WOOD
- PLYWOOD
- INSULATING SHEATHING
- BATT INSULATION
- RIGID INSULATION
- WATER CLOSET
- LAVATORY

BUILDING CODE SUMMARY

BUILDING DATA :

OCCUPANCY : MIXED - BUSINESS, MERCANTILE

BUILDING TYPE: III B - UNPROTECTED, SPRINKLERED

SPECIAL FLOOD HAZARD AREA: AE

BASE FLOOD ELEVATION: 8.00' NAVD

DESIGN FLOOD ELEVATION: 9.00' NAVD

FIRM MAP / DATE: 125126 / 03-27-2024

APPLICABLE CODES (CURRENT EDITIONS ONLY):

FLORIDA BUILDING CODE 7TH EDITION (2023)
FLORIDA BUILDING CODE 7TH EDITION (2023) ENERGY CONSERVATION
FLORIDA BUILDING CODE 7TH EDITION (2023) PLUMBING
FLORIDA BUILDING CODE 7TH EDITION (2023) MECHANICAL
FLORIDA BUILDING CODE 7TH EDITION (2023) TEST PROTOCOLS
FLORIDA BUILDING CODE 7TH EDITION (2023) ACCESSIBILITY CODE
2020 NATIONAL ELECTRICAL CODE (NFPA 70)

NEW BUILDING AREA: 3,422 SQUARE FEET

LOCATION MAP

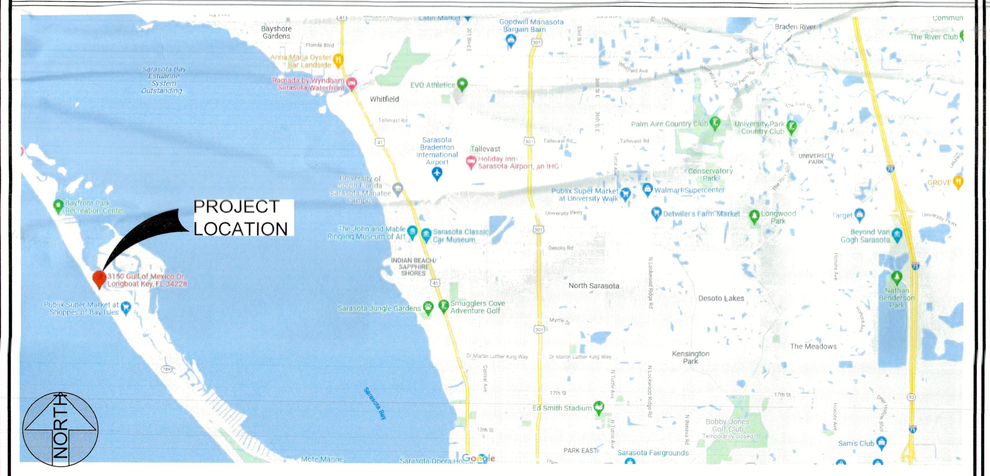

SHEET LIST

CVR	GENERAL NOTES, SUMMARY, LOCATION MAP	M-0	GENERAL NOTES
		M-1	FLOOR PLAN
LS1	LIFE SAFETY PLAN	M-2	SPECIFICATIONS
A1.0	SIDEWALK PLAN		
A1.1	FLOOR PLAN		
A1.2	ROOF PLAN	E-0	NOTES
A2.0	ELEVATIONS	E-1	PLAN
A3.0	BUILDING SECTIONS	E-2	PANEL LAYOUTS
A4.0	FLOOD PANELS		
A4.1	DETAILS		
S1.0	FOUNDATION PLAN		
S1.1	FOUNDATION DETAILS		
S2.0	STRUCTURAL FLOOR PLAN		
S3.0	ROOF FRAMING		
S4.0	DETAILS		
S4.1	DETAILS		
P-0	GENERAL NOTES		
P-1	FLOOR PLAN		
P-2	SPECIFICATIONS		

PROJECT TEAM

DESIGNERS:

JKING DESIGNS
JUSTIN KING
(941) 465-0036
JUSTIN@JKINGDESIGNS.COM

STRUCTURAL ENGINEERS:

YOUNG AND HEDRICK ENGINEERING
JODY YOUNG
(941) 306-1225
JODY@YHENGINEERS.COM

PLUMBING, MECHANICAL, AND FIRE PROTECTION ENGINEERS:

GENESIS ENGINEERING GROUP
ANTHONY LUKASZ
(941) 444-2189
TLUKASZ@GENENG.NET

ELECTRICAL ENGINEER:

DAVID PATTON JR PE
(941) 993-4607
PATTON7820@VERIZON.NET

NOTES

1. ALL WORK PERFORMED SHALL COMPLY WITH ALL APPLICABLE LOCAL AND STATE BUILDING CODES, ORDINANCES, AND REGULATIONS AS ADMINISTERED BY THE LOCAL BUILDING OFFICIALS AND SHALL BE CONSIDERED PART OF THESE CONSTRUCTION DOCUMENTS. NO PORTION OR THE DRAWINGS ARE MEANT TO IMPLY OTHERWISE.
2. IN THE EVENT OF A NOTE OR SYSTEM DESCRIPTION CONFLICT BETWEEN ARCHITECTURAL AND STRUCTURAL INFORMATION, NOTIFY DESIGNER AND STRUCTURAL ENGINEER IMMEDIATELY.
3. GENERAL CONTRACTOR TO VERIFY ALL DIMENSIONS, NOTES AND CONDITIONS AT THE SITE BEFORE ANY WORK IS STARTED. THE CONTRACTOR SHALL NOTIFY THE DESIGNER OF ANY DISCREPANCIES OR CONFLICTS IN THE DRAWINGS AND/OR FIELD CONDITIONS BEFORE STARTING THE WORK. THE DISCOVERY OF DISCREPANCIES AFTER BEGINNING THE WORK SHALL BE THE FULL RESPONSIBILITY OF THE CONTRACTOR.
4. ALL DIMENSIONS AND LOCATION OF ITEMS ARE SUBJECT TO FIELD VERIFICATION. GENERAL CONTRACTOR TO COORDINATE DISCREPANCIES WITH DESIGNER.
5. SHOP DRAWINGS AND PRODUCT SUBMITTALS SHALL BE THE RESPONSIBILITY OF THE CONTRACTOR AND REVIEWED BY THE CONTRACTOR FOR COMPLIANCE WITH THE INTENT OF THE WORK, UNLESS NOTED OTHERWISE IN THESE CONSTRUCTION DOCUMENTS.
6. REFER TO SEPARATE CIVIL DRAWINGS BY SHROYER DRAPALA ENGINEERING LLC FOR DETAILS AND METHODS SHOWING HOW COMPLIANCE WITH THE BEST MANAGEMENT PRACTICES FOR CONSTRUCTION SITE EROSION CONTROL OF STORM WATER RUN-OFF WILL BE ACCOMPLISHED. THIS IS PART OF THE NATIONAL POLLUTANT DISCHARGE ELIMINATION SYSTEM AND REQUIRED BY FEMA. REFER TO THOSE PLANS FOR INDICATION OF BEST MANAGEMENT PRACTICES FOR CONSTRUCTION SITE EROSION CONTROL OF STORM WATER RUN-OFF. FLORIDA BUILDING CODE, TOWN OF LONGBOAT KEY CODE, AND EPA CLEAN WATER ACT OF 1972
7. ELECTRICAL EQUIPMENT INCLUDING BUT NOT LIMITED TO AC EQUIPMENT, WATER HEATERS, RECEPTACLES, SWITCHES, LIGHTING, PANELS, AND TIMERS NOT PROTECTED WITHIN FLOOD-PROOF ENVELOPE OF BUILDING TO BE INSTALLED AT OR ABOVE THE NOTED DESIGN FLOOD ELEVATION IN ACCORDANCE WITH FBC 2023, 8TH EDITION, TOWN CODE 154.301(C)(5), ASCE 24-18 CH7, AND FEMA/NFIP TECHNICAL BULLETIN #1
8. ALL BUILDING MATERIALS INSTALLED BELOW THE DESIGN FLOOD ELEVATION NOTED AND NOT PROTECTED WITHIN THE FLOOD-PROOF ENVELOPE OF THE BUILDING SHALL BE FLOOD-RESISTANT MATERIAL OR, AT MINIMUM, CAN WITHSTAND FLOOD WATERS FOR 72 HOURS WITHOUT DAMAGE.

BLDG PERMIT PLANS
FILE
Copy of Record

Permit # PB24-0986 Revision
REVIEWED FOR CODE COMPLIANCE
LONGBOAT KEY BUILDING DEPT.
JUL 10 2025
APPROVED
Reviewer:

RECEIVED
JUN 25
TOWN OF LBK
Planning, Zoning

DO NOT SCALE DRAWINGS FOR DIMENSIONS NOT SHOWN CONTACT PLAN COORDINATOR FOR CLARIFICATION.

JKING DESIGNS
1356 5th Street
Sarasota, FL 34236
(O) 941.465.0036

BRISTA HOMES

BRISTA COMMONS, BUILDING TWO
3160 GULF OF MEXICO DRIVE
LONGBOAT KEY, FL

ISSUE DATE
07/25/2024

COVER PAGE

SHEET NUMBER
CVR

FIRE RATING AND OCCUPANCY NOTES

1. PER FBC TABLE 504.3, THE MAXIMUM ALLOWBALE BUILDING HEIGHT FOR A III-B, SPRINKLERED BUILDING IS 75'-0". THE MAXIMUM BUILDING HEIGHT 22'-0".
2. PER FBC TABLE 504.4, THE MAXIMUM ALLOWABLE STORIES FOR A TYPE III-B 'M' OCCUPANCY IS FOUR (3). THE BUILDING, AS DESIGNED, IS ONE (1) STORY.
3. PER FBC TABLE 506.2, THE MAXIMUM ALLOWABLE SQUARE FOOTAGE FOR A MULTI-STORY TYPE III-B BUILDING IS 50,000 SQUARE FEET FOR 'B' OCCUPANCY. THE TOTAL NEW SQUARE FOOTAGE IS 3,422 SQUARE FEET.
4. PER TABLE 601, THE EXTERIOR BEARING WALLS MUST BE 2-HOUR RATED. THE EXTERIOR BEARING WALLS ARE 2-HOUR RATED, 8" CMU WALLS PER FBC MIN. EQUIVALENT THICKNESS TABLE 721.1 AND SECTION 721.1 (SEE MANUFACTURER'S CERTIFICATION)
5. PER FBC TABLE 601, THERE IS A ZERO (0) HOUR RATING REQUIRED FOR THE PRIMARY STRUCTURAL FRAME, INTERIOR BEARING WALLS, NON-BEARING INTERIOR WALLS, FLOOR CONSTRUCTION, AND ROOF CONSTRUCTION OF A TYPE III-B BUILDING.

TABLE 601
FIRE-RESISTANCE RATING REQUIREMENTS FOR BUILDING ELEMENTS (HOURS)

BUILDING ELEMENT	TYPE I		TYPE II		TYPE III		TYPE IV	TYPE V	
	A	B	A	B	A	B	HT	A	B
Primary structural frame[g] (see Section 202)	3[a]	2[a]	1	0	1	0	HT	1	0
Bearing walls Exterior[e, f] Interior	3 3[a]	2 2[a]	1 1	0 0	2 1	2 0	2 1/HT	1 1	0 0
Nonbearing walls and partitions Exterior	See Table 602								
Nonbearing walls and partitions Interior[f]	0	0	0	0	0	0	See Section 602.4.6	0	0
Floor construction and associated secondary members (see Section 202)	2	2	1	0	1	0	HT	1	0
Roof construction and associated secondary members (see Section 202)	1 1/2[b]	1[b, c]	1[b, c]	0[c]	1[b, c]	0	HT	1[b, c]	0

For SI: 1 foot = 304.8 mm.

a. Roof supporting fire-resistance ratings of primary structural frame and bearing walls are permitted to be reduced by 1 hour where supporting a roof only.
b. Except in Group A-1, M, and S-1 occupancies, fire protection of structural members shall not be required, including protection of roof framing and decking where every part of the roof construction is 20 feet or more above any floor immediately below. Fire-retardant-treated wood members shall be allowed to be used for such unprotected members.
c. In all occupancies, heavy timber shall be allowed where a 1-hour or less fire-resistance rating is required.
d. Not less than the fire-resistance rating required by other sections of this code.
e. Not less than the fire-resistance rating based on fire separation distance (see Table 602).
f. Not less than the fire-resistance rating as referenced in Section 704.10.

TRAVEL DISTANCE NOTES

MAIN OCCUPANCY TYPE: M - BUSINESS
CONSTRUCTION TYPE: III-B SPRINKLERED

PER FBC TABLE 1017.2 IN B OCCUPANCIES, THE COMMON PATH OF EGRESS TRAVEL IN A SPRINKLERED BUILDING SHALL NOT EXCEED 250 FEET (91.44M).

SEE PLAN FOR WORST CASE TRAVEL DISTANCES - THERE ARE NO TRAVEL DISTANCES OVER 250 FEET.

EXIT LIGHTING AND EMERGENCY LIGHTING SHOWN FOR ILLUSTRATIVE PURPOSES ONLY. REFER TO ELECTRICAL PLAN FOR MORE INFORMATION.

MERCANTILE - 60 GROSS

BUSINESS AREAS - 3,422 SQ FT @ 60 SQ FT/PERSON = 3422/60 = 57 PEOPLE

TABLE 1017.2
EXIT ACCESS TRAVEL DISTANCE*

OCCUPANCY	WITHOUT SPRINKLER SYSTEM (feet)	WITH SPRINKLER SYSTEM (feet)
A, E, F-1, M, R	200	250[b]
I-1	Not Permitted	250[b]
B	200	300[b]
F-2, S-2, U	300	400[b]
H-1	Not Permitted	75[b]
H-2	Not Permitted	100[b]
H-3	Not Permitted	150[b]
H-4	Not Permitted	175[b]
H-5	Not Permitted	200[b]
I-2, I-3, I-4	Not Permitted	200[b]
S-1	200	400[b]

For SI: 1 foot = 304.8 mm.

a. See the following sections for modifications to exit access travel distance requirements:
Section 402.8 for the distance limitation in malls.
Section 404.9 for the distance limitation through an atrium space.
Section 407.4.2 for the distance limitation in Group I-2.
Sections 408.6.1 and 408.8.1 for the distance limitations in Group I-3.
Section 411.4 for the distance limitation in special amusement buildings.
Section 412.7.7 for the distance limitations in aircraft manufacturing facilities.
Section 1006.2.2.5 for the distance limitation in refrigerated machinery rooms.
Section 1006.2.2.6 for the distance limitation in refrigerated rooms and spaces.
Section 1006.3.2 for buildings with one exit.
Section 1017.2.2 for increased distance limitation in Groups F-1 and S-1.
Section 1029.7 for increased limitation in assembly seating.
Section 3103.4 for temporary structures.
Section 3126.5 for pedestrian walkways.

b. Buildings equipped throughout with an automatic sprinkler system in accordance with Section 903.3.1.1 or 903.3.1.2. See Section 903 for occupancies where automatic sprinkler systems are permitted in accordance with Section 903.3.1.2.

c. Buildings equipped throughout with an automatic sprinkler system in accordance with Section 903.3.1.1.

d. Group H occupancies equipped throughout with an automatic sprinkler system in accordance with Section 903.3.1.

LEGEND

- EXIT LIGHT AND EMERGENCY LIGHT COMBO - SHADED AREA INDICATES ILLUMINATED FACE
- DIRECTIONAL EXIT LIGHT - SHADED AREA INDICATES ILLUMINATED FACE
- BATTERY OPERATED LAY-IN EMERGENCY LIGHT
- FIRE EXTINGUISHER
- BATTERY OPERATED STRIP LED EMERGENCY LIGHT

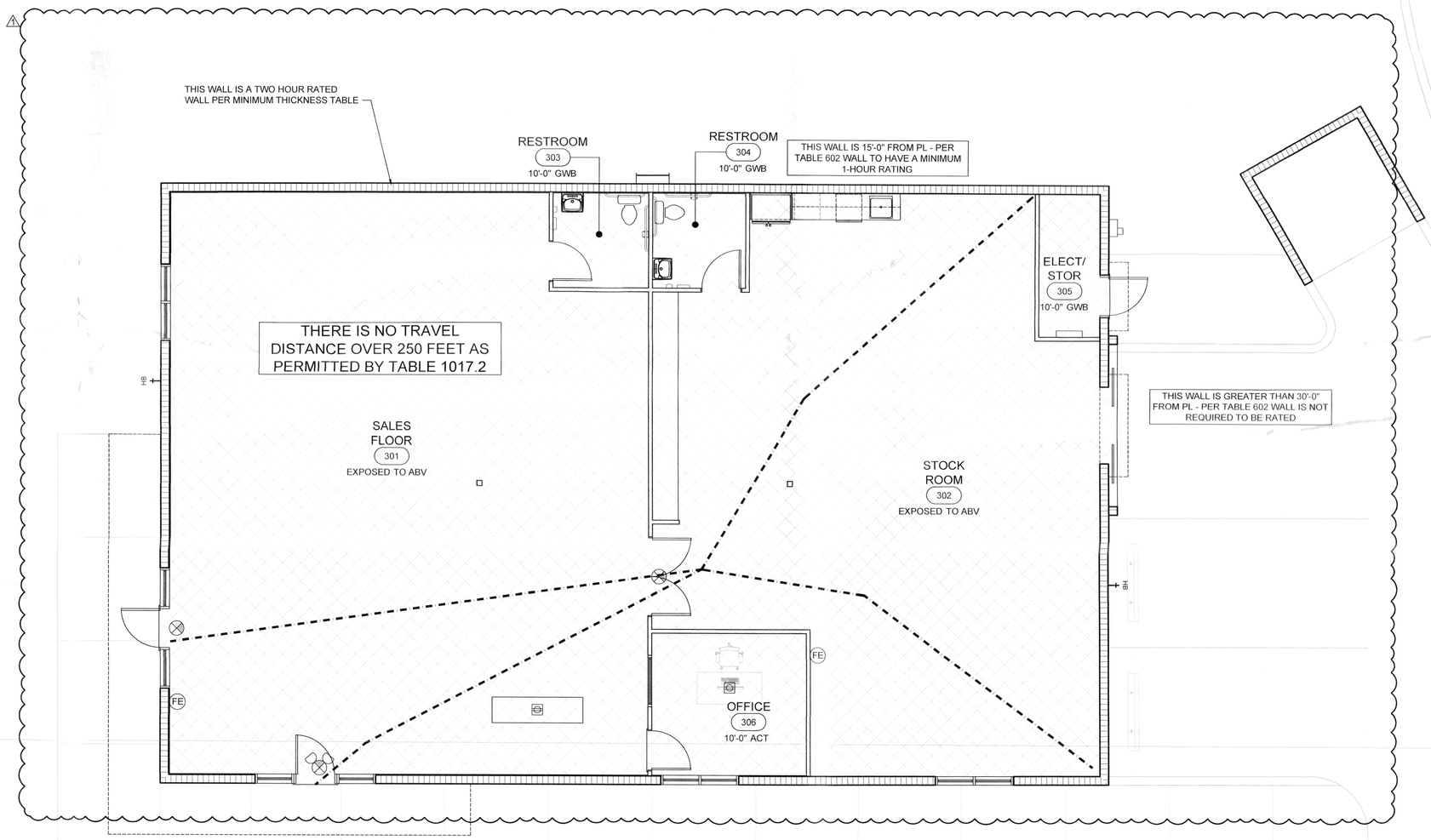

LIFE SAFETY PLAN
SCALE: 3/16" = 1'-0"

DO NOT SCALE DRAWINGS FOR DIMENSIONS NOT SHOWN CONTACT PLAN COORDINATOR FOR CLARIFICATION.

King Designs
1305 5th Street
Sarasota, FL 34236
(O) 941.465.0036

INTR BUILD-OUT
TENJ - 05/21/2025

BRISTA HOMES
941.379.0900 BRISTAHOMES.COM

BRISTA COMMONS, BUILDING TWO
3160 GULF OF MEXICO DRIVE
LONGBOAT KEY, FL

ISSUE DATE
07/25/2024

LIFE SAFETY PLAN

SHEET NUMBER
LS1

SITE LAYOUT NOTES

1. EJ = EXPANSION JOINT
2. CJ = CONTROL JOINT
3. PROVIDE EXPANSION JOINT BETWEEN SIDEWALK AND BUILDING SLAB
4. ALL SIDEWALKS TO BE MINIMUM 4" THICK
5. ALL CONTROL JOINTS TO BE TOOLED CONTROL JOINTS
6. ALL SITE STRIPING PER CIVIL PLANS
7. ALL CURBING PER CIVIL PLANS
8. ALL HC PARKING DETAILS PER CIVIL PLANS

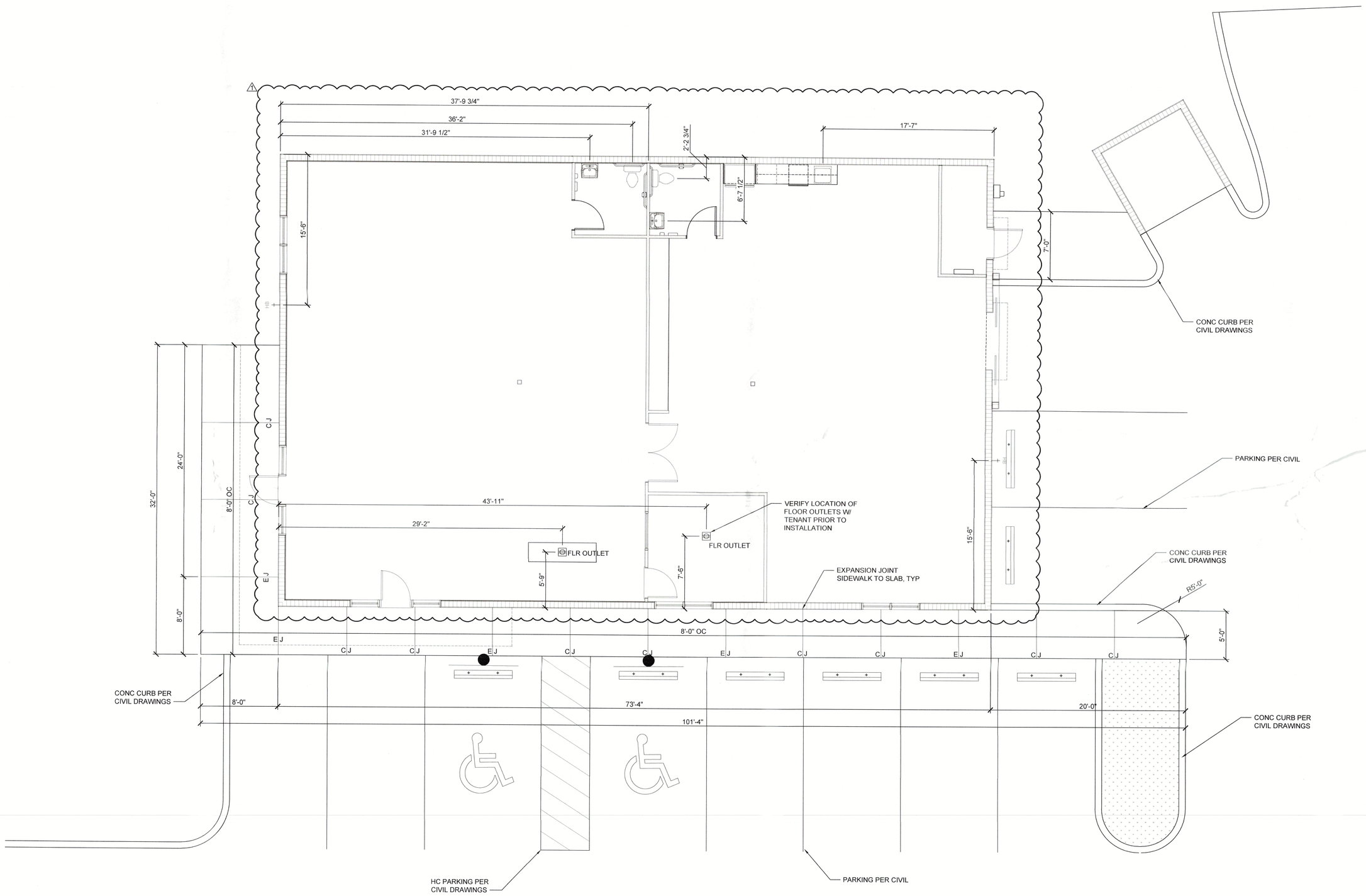

SIDEWALK PLAN
SCALE: 3/16" = 1'-0"

DO NOT SCALE DRAWINGS FOR DIMENSIONS NOT SHOWN CONTACT PLAN COORDINATOR FOR CLARIFICATION.

JKING DESIGNS
1385 5th Street
Sarasota, FL 34236
(O) 941.455.0038

1	INTR BUILD-OUT
	TENJ - 05/21/2025
2	
3	
4	
5	
6	

BRISTA
941.379.0500 BRISTHOMES.COM

BRISTA COMMONS, BUILDING TWO
3160 GULF OF MEXICO DRIVE
LONGBOAT KEY, FL

RECEIVED
JUL 25 2024
TOWN OF LONGBOAT KEY
Planning, Zoning & Building

ISSUE DATE
07/25/2024

SIDEWALK PLAN

SHEET NUMBER
A1.0

NEW BUILDING
AREA: 3,422
SQUARE FEET

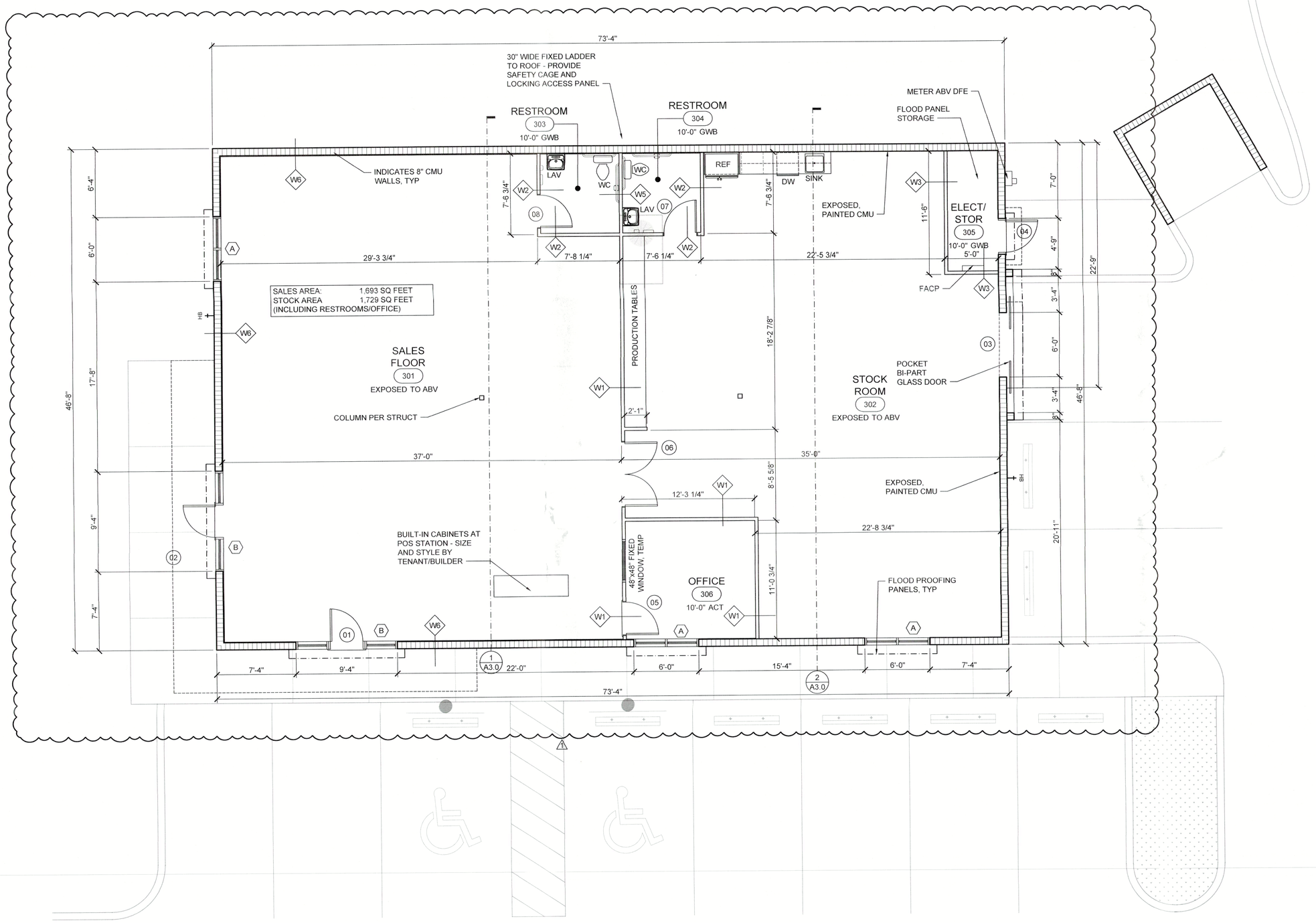

FLOOR PLAN
SCALE: 3/16" = 1'-0"

FLORIDA PRODUCT APROVAL LIST

MARK	PRODUCT CATEGORY	SUBCATEGORY	MANUFACTURER	MODEL	FL APPROVAL NO.
1	PANEL WALLS	STOREFRONT	CGI DOORS AND WINDOWS	SS-3500	FL25574.2
2	EXTERIOR DOORS	SWINGING DOOR ASSEMBLIES	CGI DOORS AND WINDOWS	SE-3550	25573.3
3	EXTERIOR DOORS	SECTIONAL EXTERIOR DOOR	HAAS DOOR COMPANY	HT SERIES TO 16'-2"	FL17430.2
4	EXTERIOR DOORS	SECTIONAL EXTERIOR DOOR	HAAS DOOR COMPANY	HT SERIES TO 18'-2"	FL16660.20
5	STRUCTURAL COMPONENTS	RESULT OF NEW TECH	SMART-VENT	1540-520	FL5822.3
6	STRUCTURAL COMPONENTS	RESULT OF NEW TECH	SMART-VENT	1540-510	FL5822.1
7	STRUCTURAL COMPONENTS	PRODUCT OF NEW TECH	FLOOD RISK AMERICA	FRA FLOOD PLANEL	FL41703.1
8	ROOFING	UNDERLAYMENTS	POLYGLASS USA	POLYGLASS UNDERLAYMENT	FL5259.2
9			POLY-GLASS	ROOF EDGE TERMINATION SYSTEMS	NOA 22-0630.03
10			POLY-GLASS	MODIFIED MITUMEN	NOA 23-1211.05
11			POLY-GLASS	RIGID INSULATION	
12			GENSTEEL DOORS	STEEL GENSTORM	NOA 23-1207.07
13			GENSTEEL DOORS	STEEL GENSTORM	NOA 23-1207.12

HARDWARE SCHEDULE

HDW1	1 SET OFFSET PIVOT HINGE - COLOR: ALUMINUM INTERIOR PUSH BAR - CRL: PRO311148 - SIZE: 48" - MATL : ALUMINUM - COLOR: CLEAR ALUM EXTERIOR PULL - CRL: PRO321112 - SIZE: 12" OFFSET - MATL : ALUMINUM - COLOR: CLEAR ALUM THRESHOLD PER DOOR SYSTEM	CLOSER - CRL: DC53A - SIZE: "3" - COLOR: ALUM FULL WEATHERSTRIPPING LOCK - BEST ACCESS SYSTEMS 1E SERIES LOCK - ALUM FINISH - STANDARD CAM - KEYED LOCK AT EXTERIOR - THUMBTURN AT INTERIOR
HDW2	2 PAIR BUTT HINGES - SATIN NICKEL (1) LEVER STYLE HANDLE W/ PRIVACY LOCKSET - SATIN NICKEL (1) UNISEX HANDICAP RESTROOM SIGNAGE (1) INTERIOR, LIGHT-DUTY CLOSER	
HDW3	2 PAIR BUTT HINGES - SATIN NICKEL (1) LEVER STYLE HANDLE W/ KEYED ENTRY LOCKSET - SATIN NICKEL	
HDW4	2 PAIR BUTT HINGES - SATIN NICKEL (1) LEVER STYLE HANDLE W/ NO (HALL/CLOSET/PASSAGE) LOCKSET - SATIN NICKEL	
HDW5	2 PAIR BUTT HINGES - SATIN NICKEL (1) LEVER STYLE HANDLE W/ KEYED/CLASSROOM LOCKSET - SATIN NICKEL	
HDW6	2 PAIR BUTT HINGES - STAINLESS STEEL (1) LEVER STYLE EXTERIOR HANDLE/DEADBOLT HANDLESET	
HDW7	2 PAIR BUTT HINGES - STAINLESS STEEL (1) LEVER STYLE HANDLE W/ PRIVACY LOCKSET - SATIN NICKEL	
HDW8	(1) 6" BOTTOM RAIL WITH PIVOT AND HOLD OPEN - COLOR: CLEAR ANODIZED (1) TOP PATCH W/ INSERT - COLOR: CLEAR ANODIZED (1) CORNER (SIDELITE) TRANSOM PATCH W/ INSERT - COLOR: CLEAR ANODIZED (1) CORNER (SIDELITE) TRANSOM PATCH - COLOR: CLEAR ANODIZED (1) SET 8" BACK TO BACK HANDLES - COLOR: SATIN CHROME (2) LOW PROFILE DOME DOOR STOP - COLOR: SATIN CHROME	

ALL ITEMS ARE "OR EQUAL" - VERIFY ALL FINISHES AND COLORS W/ OWNER

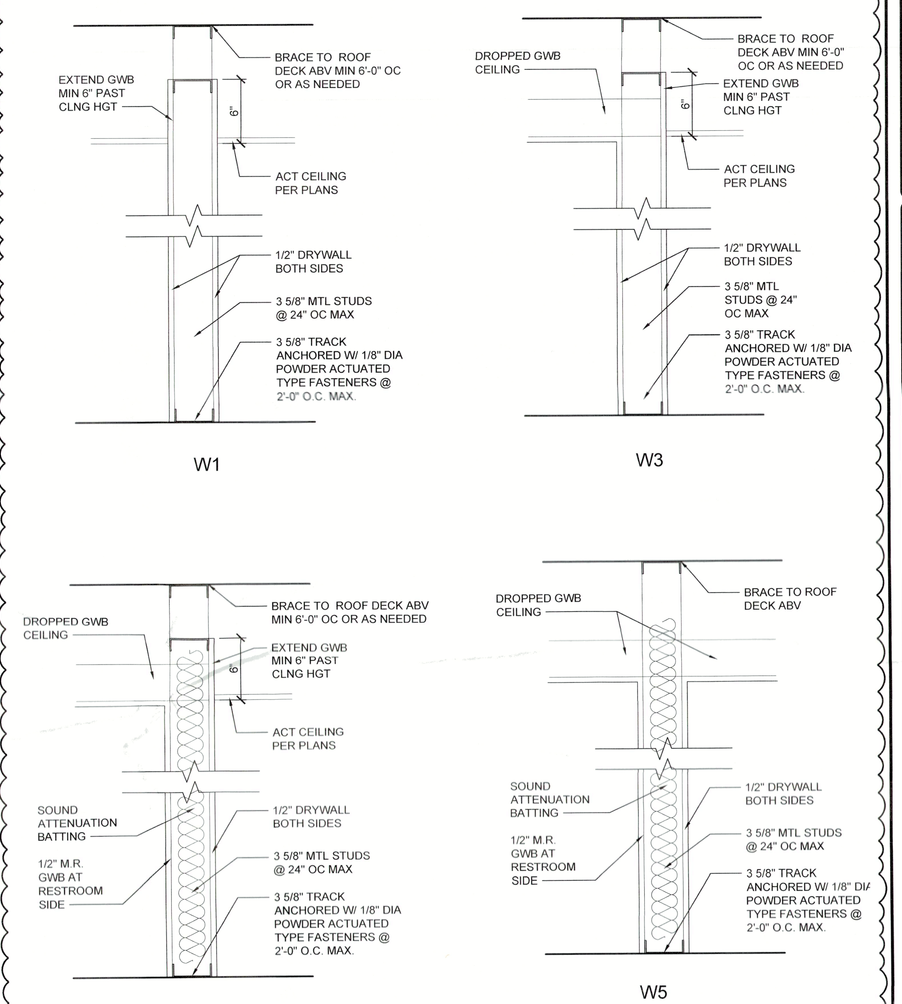

DOOR AND FRAME SCHEDULE

NUMBER	TYPE	SIZE		MATL	FRAME				HARDWARE	NOTES
					MATL	DETAIL				
		WIDTH	HGT			HEAD	JAMB	SILL		
01	STOREFRONT	3'-0"	8'-0"	ALUMINUM	ALUMINUM	SEE STRFRNT SHOP DWGS	SEE STRFRNT SHOP DWGS	--	HDW1	--
02	STOREFRONT	3'-0"	8'-0"	ALUMINUM	ALUMINUM	SEE STRFRNT SHOP DWGS	SEE STRFRNT SHOP DWGS	--	HDW1	--
03	BI-PART STOREFRONT	6'-0"	8'-0"	ALUMINUM	ALUMINUM	SEE STRFRNT SHOP DWGS	SEE STRFRNT SHOP DWGS	--		--
04	SC METAL	3'-0"	8'-0"	STEEL	STEEL	1/A4.1	2/A4.1	--	HDW6	--
05	PREHUNG INTERIOR	3'-0"	8'-0"	HC WOOD	WOOD	--	--	--	HDW3	--
06	PREHUNG DBL	6'-0"	8'-0"	HC WOOD	WOOD	--	--	--	HDW4	--
07	PREHUNG INTERIOR	3'-0"	8'-0"	HC WOOD	WOOD	--	--	--	HDW2	--
08	PREHUNG INTERIOR	3'-0"	8'-0"	HC WOOD	WOOD	--	--	--	HDW2	--

FLOOR PLAN NOTES

1. ALL SIDEWALKS TO BE MINIMUM 4" THICK
2. ALL SITE STRIPING PER CIVIL PLANS
3. ALL CURBING PER CIVIL PLANS
4. ALL HC PARKING DETAILS PER CIVIL PLANS
5. SEE A3.0 FOR DUMPSTER ENCLOSURE DETAILS
6. ALL EXTERIOR WALLS TO BE CMU UNO
7. BUILDING DESIGNED AS "DARK SHELL".
8. RTU TO BE INSTALLED AT ROOF CURBS. NO DUCTING IN UNITS.
9. ALL ANGLES TO BE 90° UNLESS NOTED OTHERWISE
10. SEE STRUCTURAL PAGES FOR ALL STRUCTURAL SPECS, LAYOUTS, AND DETAILS.
11. SEE MECHANICAL PAGES FOR ALL MECHANICAL SPECS, LAYOUTS AND DETAILS.
12. SEE PLUMBING PAGES FOR ALL PLUMBING SPECS, LAYOUTS AND DETAILS.
13. SEE ELECTRICAL PAGES FOR ALL ELECTRICAL SPECS, LAYOUTS AND DETAILS.
14. PROVIDE FLOOD PROOF PANELS AT EACH DOOR/STOREFRONT LOCATION. FLOOR TO DFE PROTECTION TO BE "FLOOD LOG" SYSTEM BY FLOOD PANEL LLC PROVIDED BY NATIONAL FLOOD PROTECTION.
15. PROVIDE FLOOD PROOF PANELS AT EACH WINDOW BELOW DFE. WINDOW PANELS TO BE "FLOOD PANEL" SYSTEM BY FLOOD PANEL LLC PROVIDED BY NATIONAL FLOOD PROTECTION.
16. ALL FLOOD PROOF SYSTEMS TO BE INSTALLED PER MANUFACTURER'S AND VENDOR'S SPECIFICATIONS AND INSTALLATION DETAILS.
17. ALL CONNECTION DETAILS FOR FLOOD PROOF PANEL SYSTEMS TO BE PROVIDED BY MANUFACTURER AND/OR VENDOR.
18. ALL CASEWORK DESIGN AND LAYOUT BY OTHERS.
19. FUTURE TENANTS TO PROVIDE SUMP PUMP LOCATION AND SPECS FOR SUMP DRAINAGE.
20. FUTURE TENANTS TO PROVIDE FLOOR DRAIN LOCATIONS IN FUTURE TENANT SPACES.
21. FUTURE TENANTS TO PROVIDE UNDER SLAB WATER PROOFING MEMBRANES AS NECESSARY WHEN NEW SLABS ARE INSTALLED
22. PROVIDE MIRAPLY AND MIRA DRAIN SYSTEM UNDER SLAB AND FOOTINGS FOR WATER PROOFING UNDER THE BUILDING
23. PROVIDE MASTER SEAL WATER PROOF MEMBRANE AT ALL EXTERIOR WALLS 6" ABOVE DFE. MASTER SEAL COATING TO BE APPLIED PRIOR TO EXTERIOR FINISH. CEM OR STONE FINISH APPLIED OVER MASTER SEAL.

RECEIVED
JUN 21 2024
TOWN OF LONGBOAT KEY
Planning, Zoning & Building

DO NOT SCALE DRAWINGS FOR DIMENSIONS NOT SHOWN CONTACT PLAN COORDINATOR FOR CLARIFICATION.

Jking DESIGNS
1385 5th Street
Sarasota, FL 34236
(O) 941.400.5566

INTR BUILD-OUT
TENJ - 05/21/2025

BRISTA HOMES
941.870.6000 BRISTAHOMES.COM

BRISTA COMMONS, BUILDING TWO
3160 GULF OF MEXICO DRIVE
LONGBOAT KEY, FL

ISSUE DATE
07/25/2024

PARTIAL FLOOR PLAN

SHEET NUMBER
A1.1

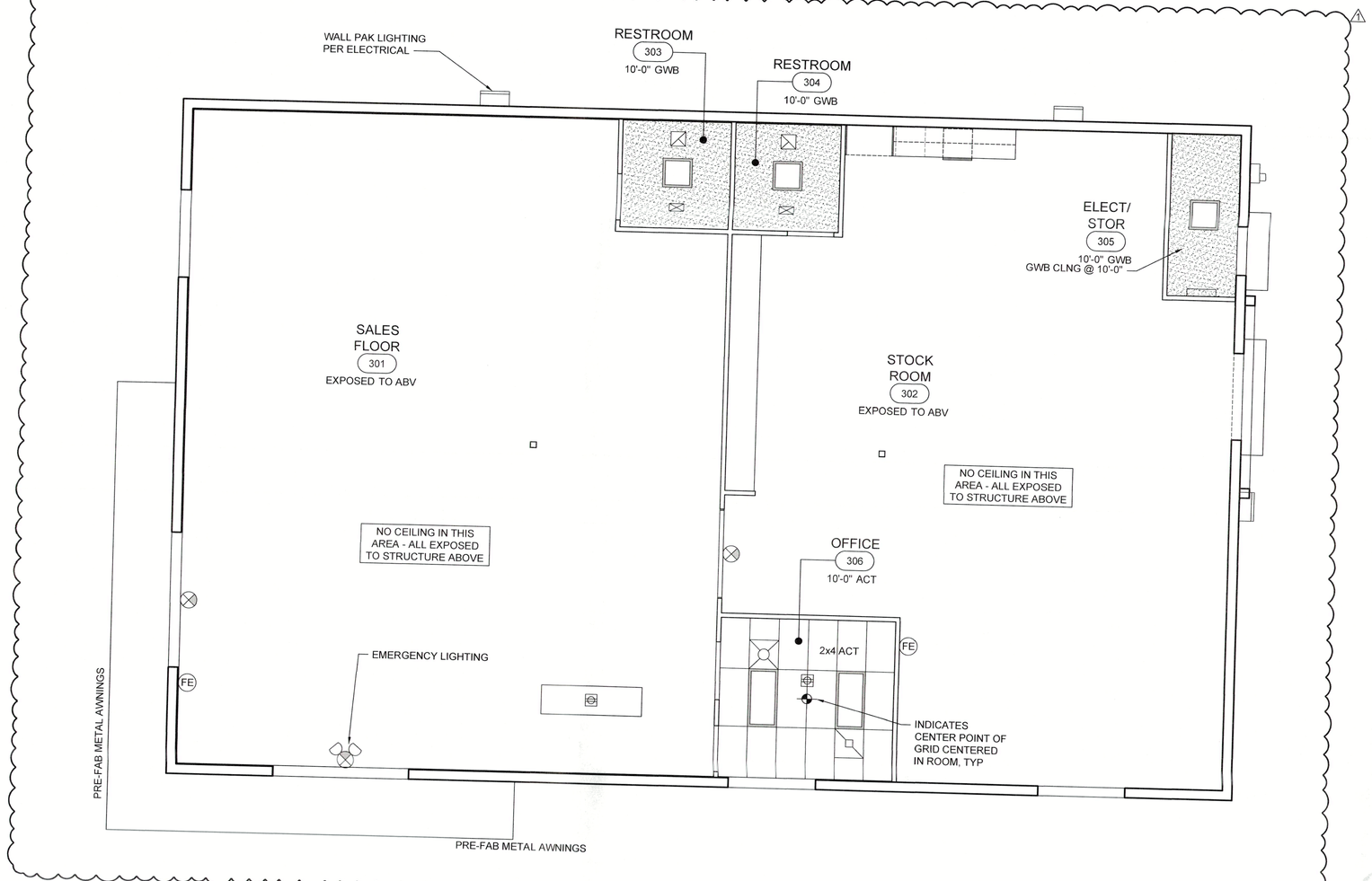

REFLECTED CEILING PLAN
SCALE: 3/16" = 1'-0"

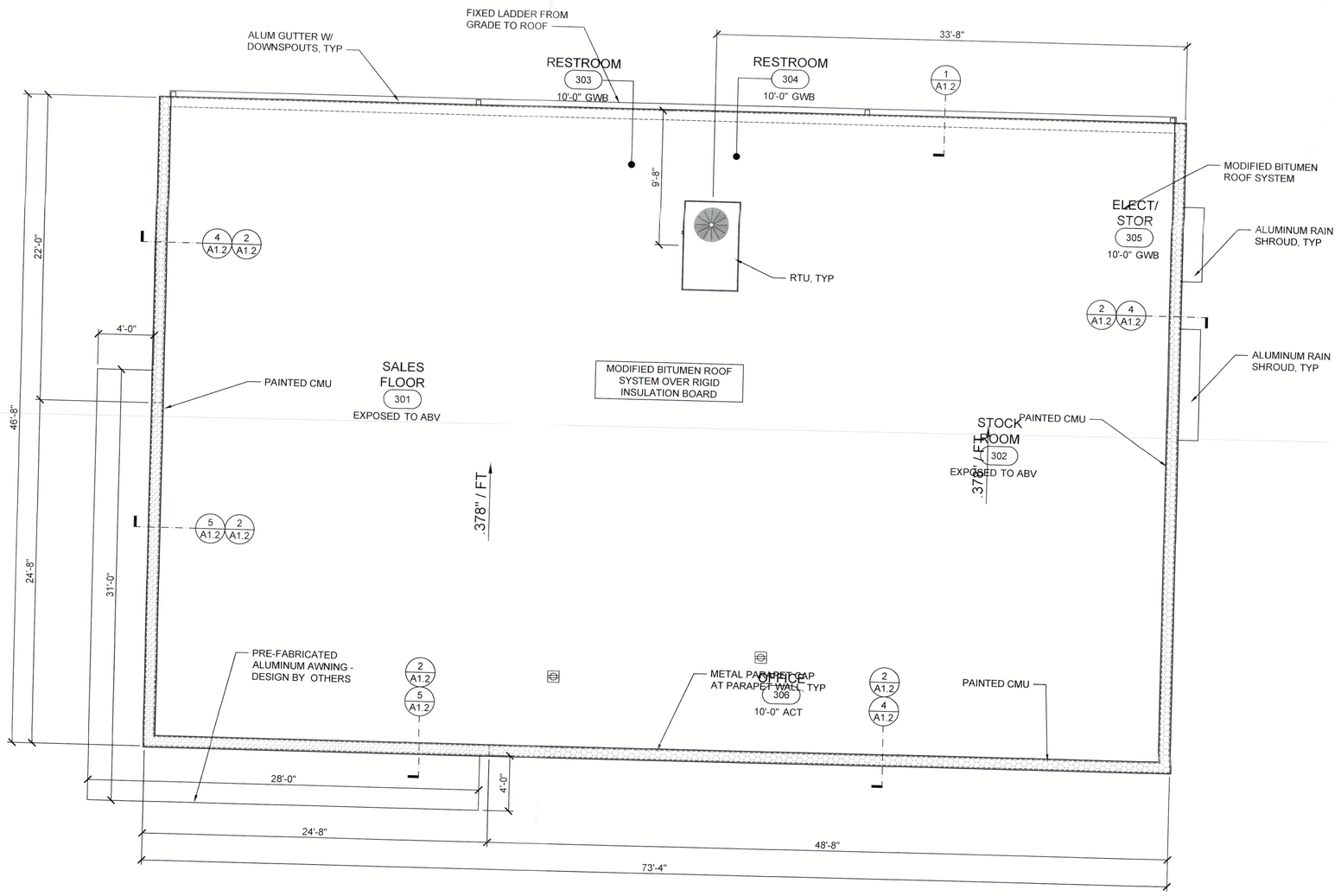

ROOF PLAN
SCALE: 3/16" = 1'-0"

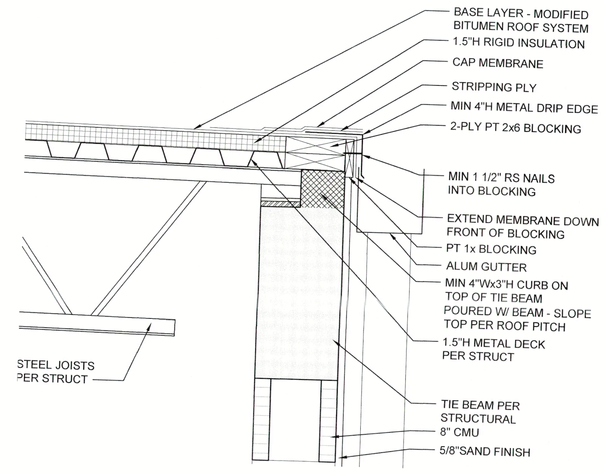

1 ROOF EDGE DETAIL
SCALE: 1 1/2" = 1'-0"

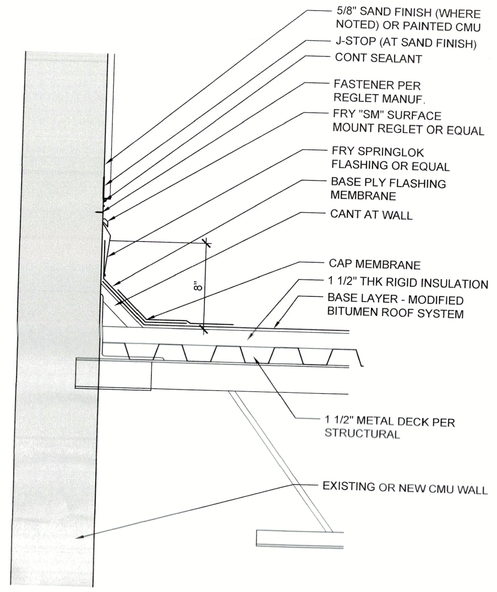

2 FLASHING DETAIL
SCALE: 1 1/2" = 1'-0"

REFLECTED CEILING PLAN NOTES

1. ALL NEW ACT TO BE 2x4 LAY-IN TILES UNO
2. ALL RESTROOM CEILINGS TO BE GWB
3. SEE PLANS FOR TYPICAL CEILING HEIGHTS
4. GRID TO BE INTERRUPTED AT EACH INTERIOR PARTITION WALL
5. ALL RECESSED LIGHT FIXTURES SHOWN TO BE CENTERED IN THE CEILING TILE

CEILING LEGEND

- RECESSED LED LIGHT
- DIRECTIONAL EXIT LIGHT - SHADED AREA INDICATES ILLUMINATED FACE
- EXIT SIGNAGE
- 2x4 LAY-IN LIGHT FIXTURE
- 2x2 AC SUPPLY GRILLE
- 2x2 EXHAUST FAN GRILLE
- SPRINKLER HEAD
- WALL MOUNTED LIGHT PACK
- LED STRIP FIXTURE

RCP DETAILS

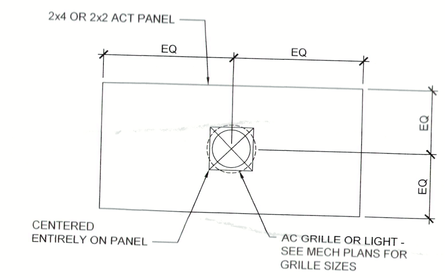

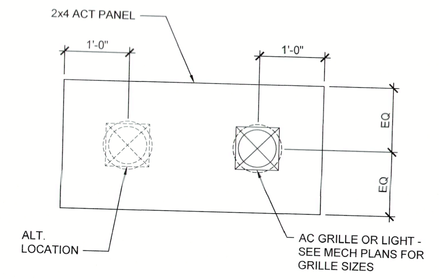

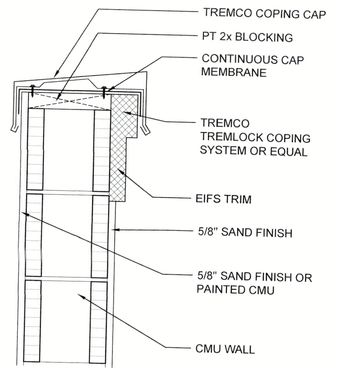

4 PARAPET DTL (W/O STONE)
SCALE: 1 1/2" = 1'-0"

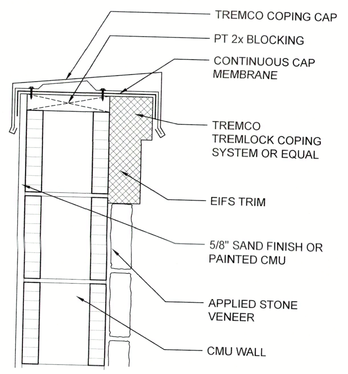

5 PARAPET DTL (W/ STONE)
SCALE: 1 1/2" = 1'-0"

BEARING HEIGHT LEGEND

- INDICATES TOP OF CMU AT 20'-0" AFF
- INDICATES TOP OF CMU AT 16'-4" AFF
- INDICATES TOP OF CMU AT 13'-4" AFF

REVIEWED
JB/ PK
TOWN OF ISLAMORADA
Planning & Building Dept.

DO NOT SCALE DRAWINGS FOR DIMENSIONS NOT SHOWN CONTACT PLAN COORDINATOR FOR CLARIFICATION.

JKing DESIGNS
1385 5th Street
Sarasota, FL 34236
(O) 941.955.0008

INTR BUILD-OUT
TENJ - 05/21/2025

BRISTA HOMES

BRISTA COMMONS, BUILDING TWO
3160 GULF OF MEXICO DRIVE
LONGBOAT KEY, FL

ISSUE DATE
07/25/2024

REFLECTED CEILING PLAN

SHEET NUMBER

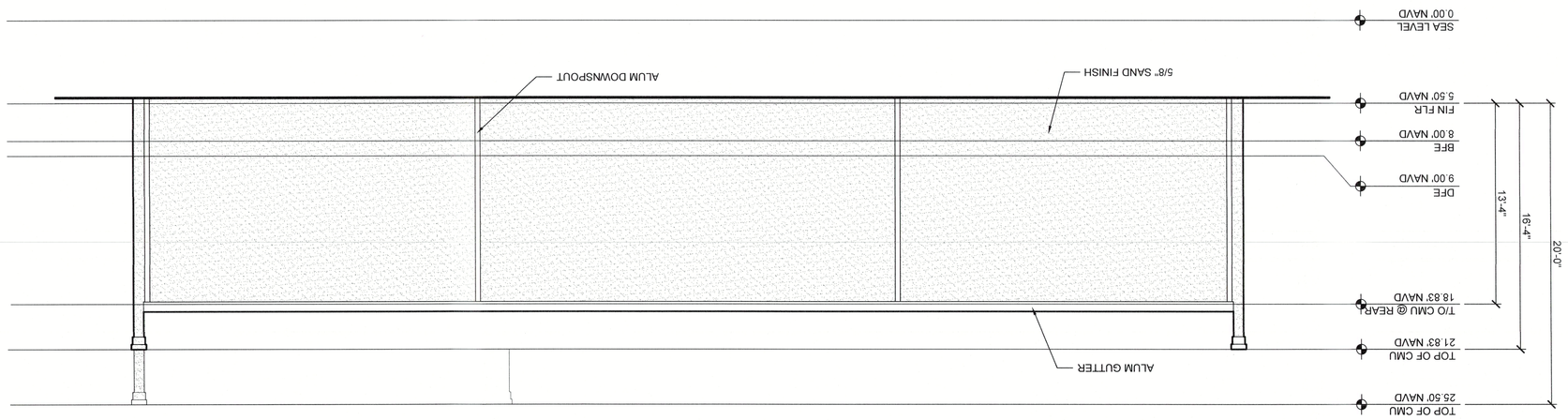

PARTIAL REAR ELEVATION
SCALE: 3/16" = 1'-0"

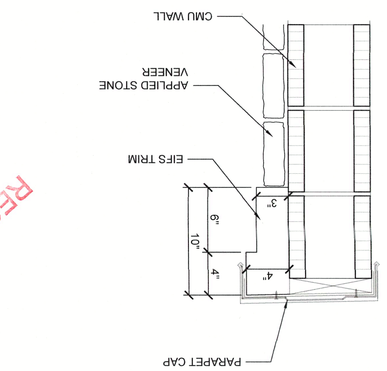

2 PARAPET TRIM DTL (W/ STONE)
SCALE: 1 1/2" = 1'-0"

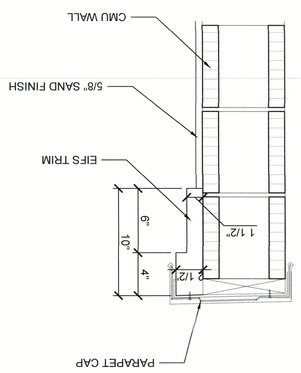

1 PARAPET TRIM DTL (W/O STONE)
SCALE: 1 1/2" = 1'-0"

RIGHT ELEVATION
SCALE: 3/16" = 1'-0"

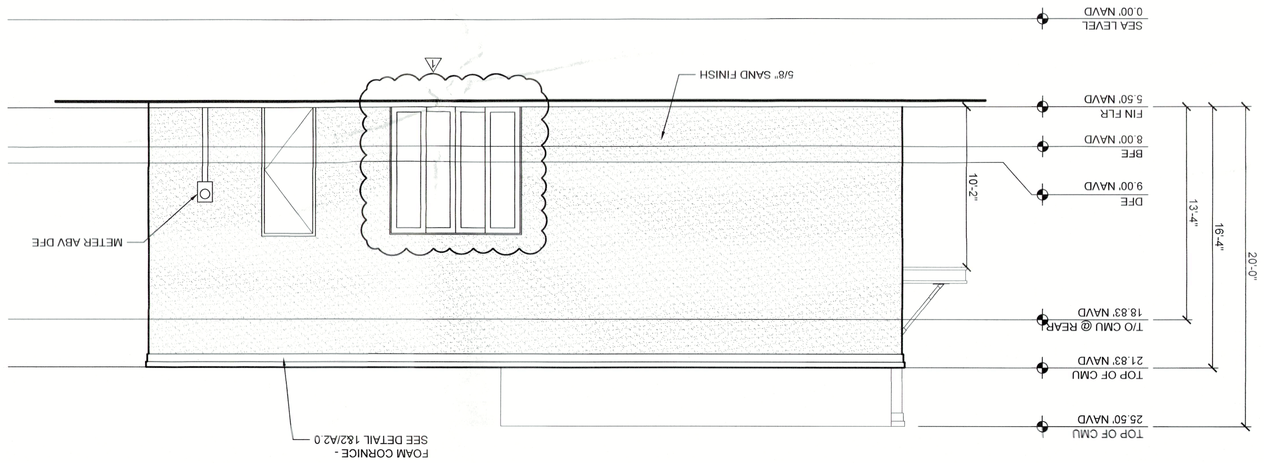

LEFT ELEVATION
SCALE: 3/16" = 1'-0"

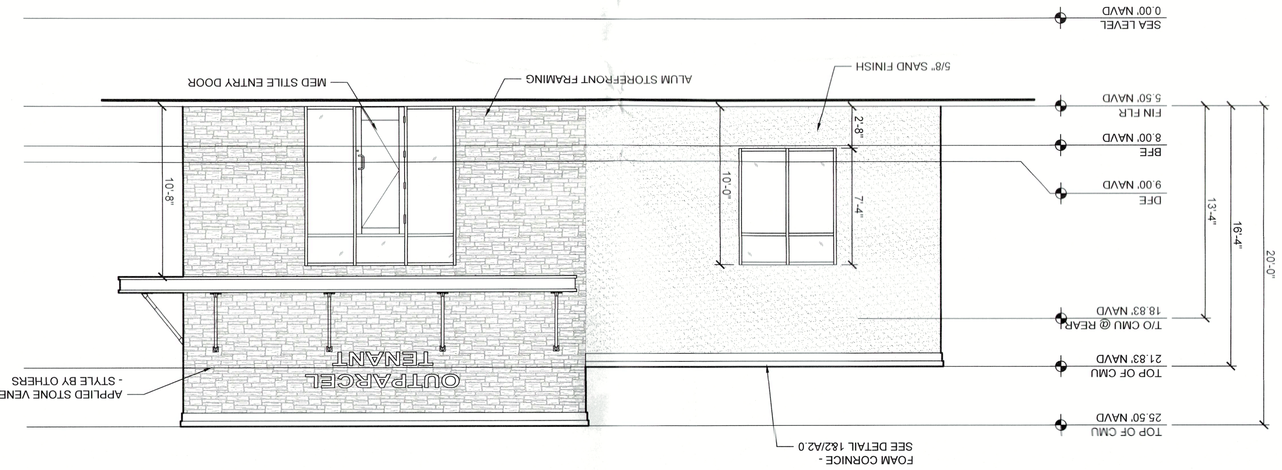

FRONT ELEVATION
SCALE: 3/16" = 1'-0"

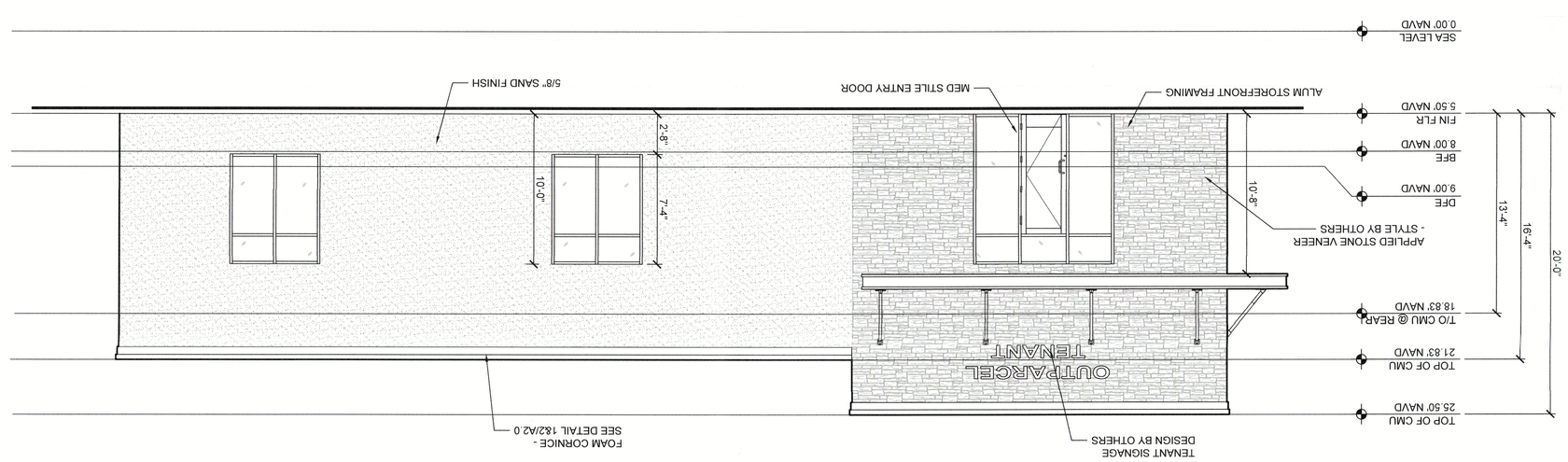

ASSUMED AVERAGE STONE DEPTH =2"

WHERE A BRICK LEDGE OR STUCCO BAND IS LOCATED ADJACENT TO STONE, MINIMUM THICKNESS OF LEDGE/BAND IS 3" SO THAT LEDGE/BAND IS 1" PROUD OF STONE

ALL STONE IS AN APPLIED STONE VENEER - STYLE BY OTHERS

ALL STUCCO BANDS WHERE NO STONE IS PRESENT SHALL BE 1" THICK

ALL BANDING NOT CALLED OUT AS EIFS OR BRICK SHALL BE RAISED STUCCO BANDING

CEMENT PLASTER FINISH OVER CONCRETE MASONRY SHALL BE 5/8" THICK SMOOTH FINISH PER ASTM 926

CEMENT PLASTER FINISH OVER WOOD FRAMED WALLS SHALL BE 7/8" (3-COAT) SMOOTH FINISH. OVER ASPHALT IMPREGNATED PAPER BACK WIRE LATH. OVER HOUSE WRAP OVER EXTERIOR SHEATHING PER STRUCTURAL DRAWINGS. LATHE TO BE FURRED OUT FROM BACKING BY AN APPROVED METHOD. FBCR 7TH EDITION (2020) R703.6.

ELEVATIONS: BANDING, MOLDING, COLUMNS & TRIM SHALL RECEIVE A SAND FINISH.

WEEP SCREED SHALL BE IN ACCORDANCE WITH FBCR 7TH EDITION (2020) 703.6.2.1

RECEIVED
JUN 21 2025
TOWN OF LONGBOAT KEY
Planning, Zoning + Building

BRISTA
BUILDING GROUP
941.870.0900 BRISTAHOMES.COM

J King DESIGNS
1395 5th Street
Sarasota, FL 34236
(O) 941.465.6036

NTR BLD-OUT
TEAU - 05/21/2025

DO NOT SCALE DRAWINGS FOR DIMENSIONS NOT SHOWN CONTACT PLAN COORDINATOR FOR CLARIFICATION

ISSUE DATE 07/25/2024
ELEVATIONS
SHEET NUMBER A2.0

BRISTA COMMONS, BUILDING TWO
3160 GULF OF MEXICO DRIVE
LONGBOAT KEY, FL

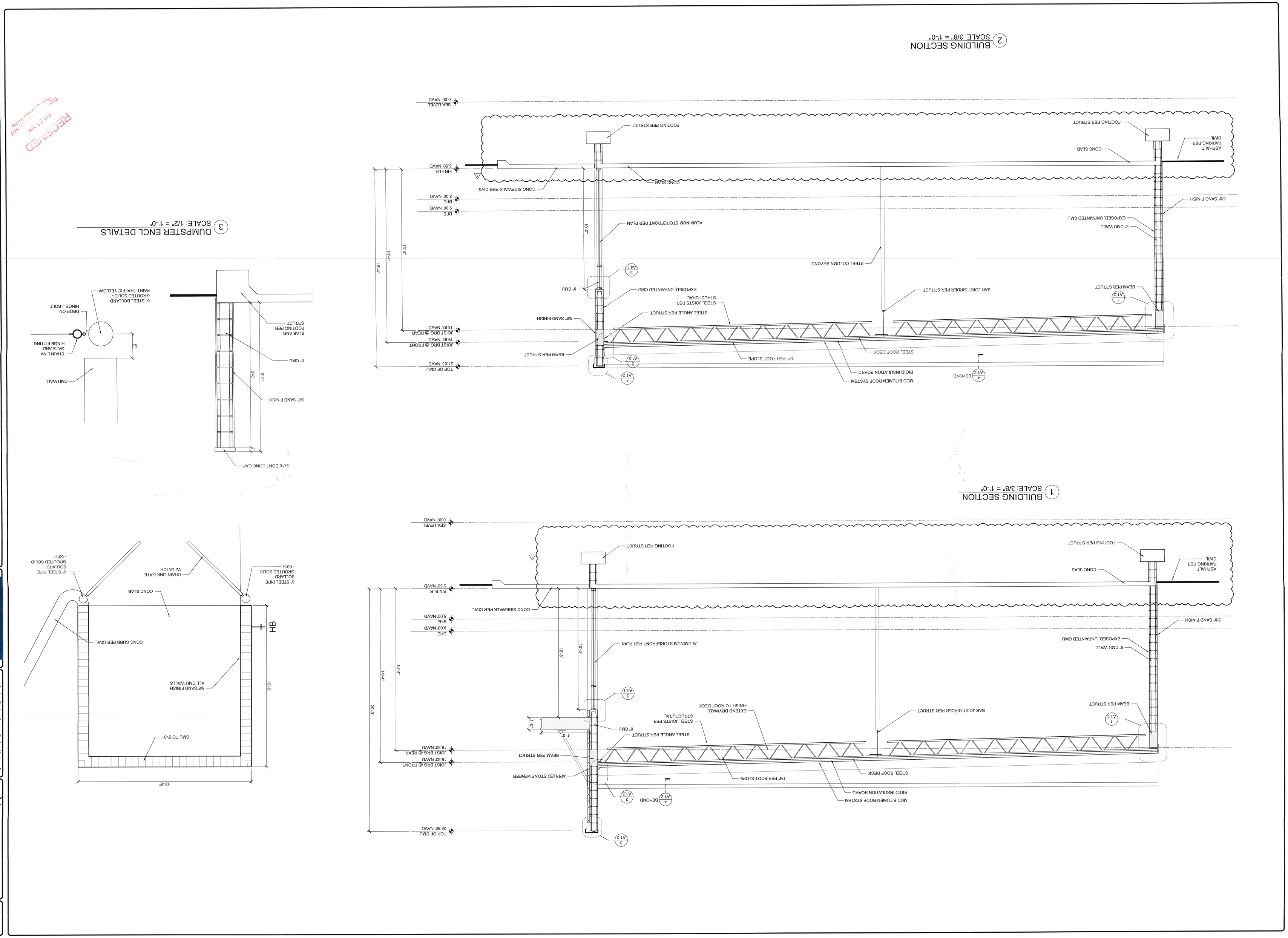

RECEIVED
JUN 25 2025
TOWN OF LONGBOAT KEY
Plans and Planning & Building

BRISTA COMMONS, BUILDING TWO
3160 GULF OF MEXICO DRIVE
LONGBOAT KEY, FL

BRISTA HOMES
BRISTA.COM | BRISTAHOMES.COM

INTR BUILD-OUT
TENJ - 05/21/2025

Jking DESIGNS
1385 5th Street
Sarasota, FL 34236
(O) 941.465.0036

DO NOT SCALE DRAWINGS FOR DIMENSIONS NOT SHOWN CONTACT PLAN COORDINATOR FOR CLARIFICATION

ISSUE DATE 07/25/2024

BUILDING SECTIONS

SHEET NUMBER A3.0

ALL DETAILS SHOWN ON THIS PAGE ARE PROVIDED BY THE MANUFACTURER FOR REFERENCE ONLY. REFER TO SHOP DRAWINGS PROVIDED BY VENDOR/MANUFACTURER FOR FINAL SPEC AND ATTACHMENT DETAILS. FINAL SHOP DRAWINGS SUPERCEDE DETAILS SHOWN HEREIN.

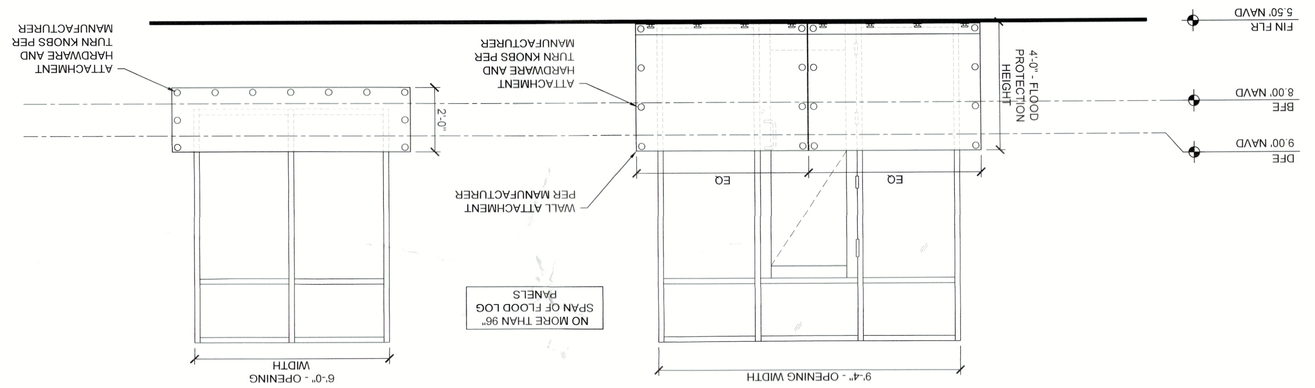

CONNECTION DETAIL
SCALE: 3" = 1'-0"

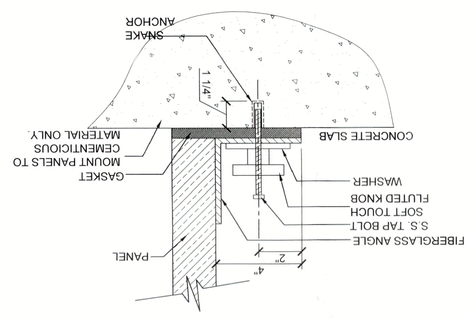

CONNECTION DETAIL
SCALE: 3" = 1'-0"

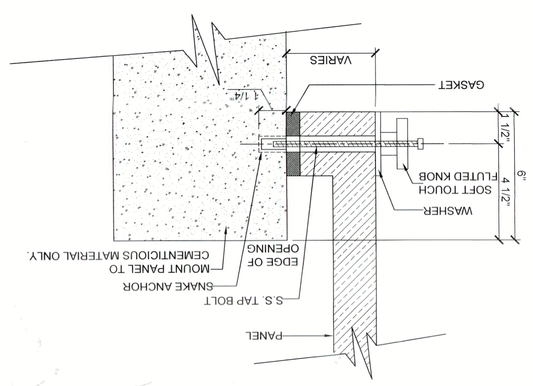

CONNECTION DETAIL
SCALE: 3" = 1'-0"

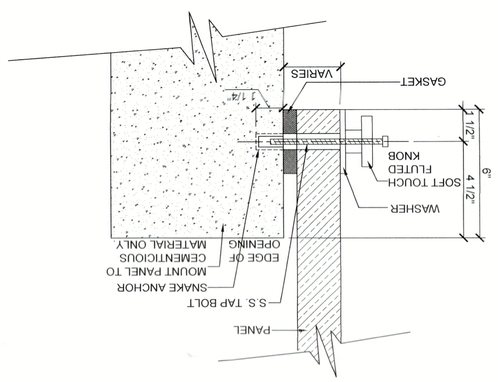

CONNECTION DETAIL
SCALE: 3" = 1'-0"

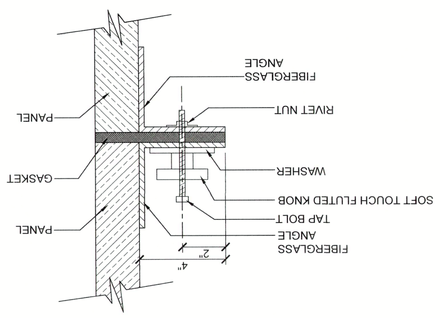

STOREFRONT TYPE "A"
SCALE: 3/8" = 1'-0"

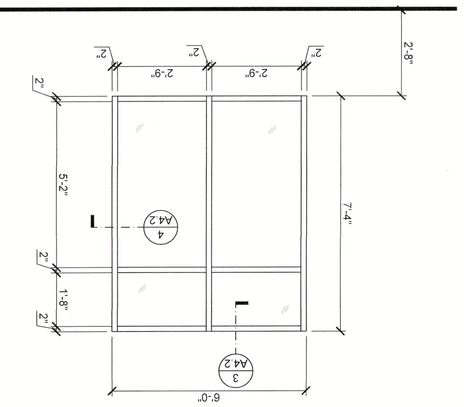

STOREFRONT TYPE "B"
SCALE: 3/8" = 1'-0"

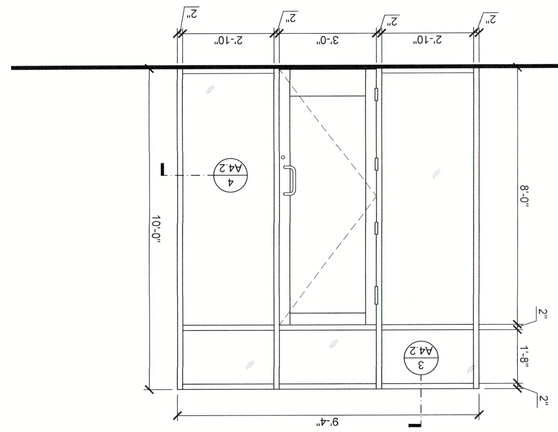

CONNECTION DETAIL
SCALE: 3" = 1'-0"

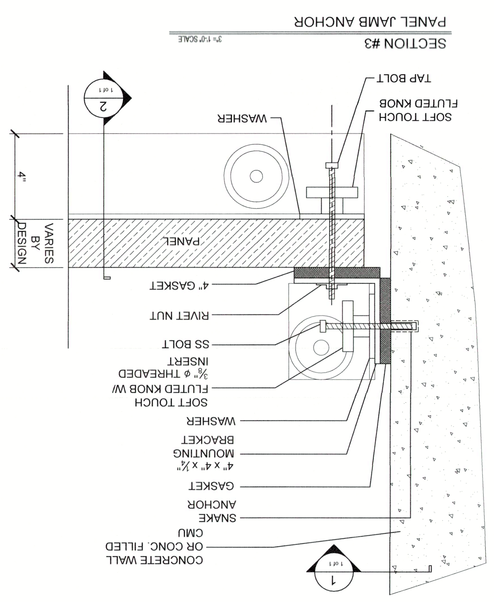

RECEIVED
JUN 21 '24
TOWN OF Planning & Zoning Dept.

BRISTA COMMONS, BUILDING TWO
3160 GULF OF MEXICO DRIVE
LONGBOAT KEY, FL

ISSUE DATE
07/25/2024

FLOOD PROOF PANEL DETAILS

SHEET NUMBER
A4.0

DO NOT SCALE DRAWINGS FOR DIMENSIONS NOT SHOWN CONTACT PLAN COORDINATOR FOR CLARIFICATION

BRISTA
DEVELOPERS
941.379.5000 BRISTADEVS.COM

JKing DESIGNS
1385 5th Street
Sarasota, FL 34236
(O) 941.465.9098

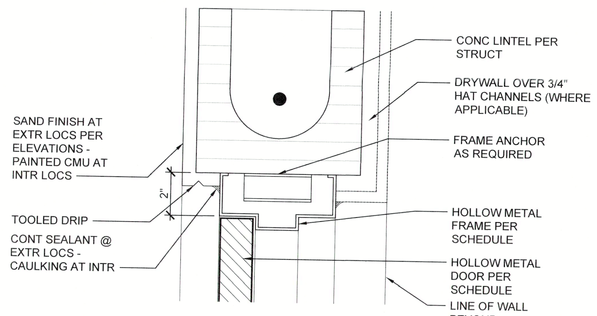

1 EXTERIOR METAL DOOR HEAD
SCALE: 3" = 1'-0"

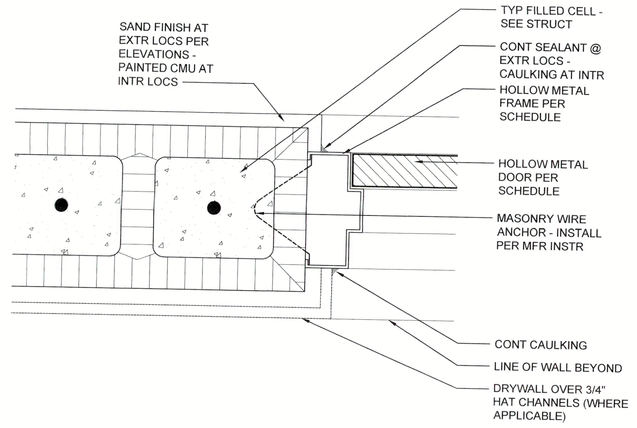

2 EXTERIOR METAL DOOR JAMB
SCALE: 3" = 1'-0"

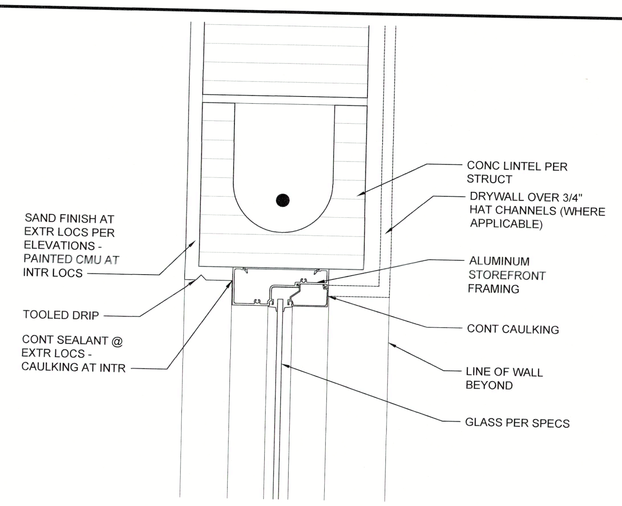

3 EXTERIOR STOREFRONT HEAD
SCALE: 3" = 1'-0"

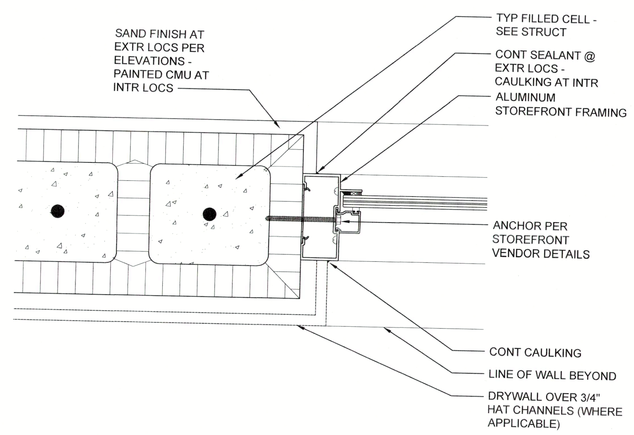

4 EXTERIOR STOREFRONT JAMB
SCALE: 3" = 1'-0"

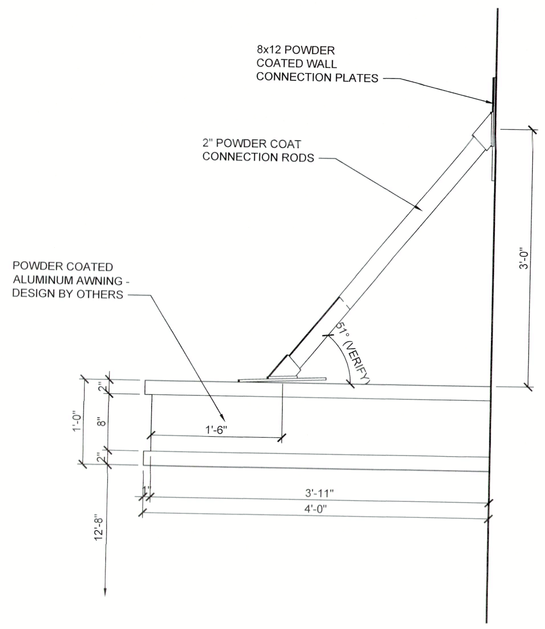

5 ENTRY AWNING DETAIL
SCALE: 1" = 1'-0"

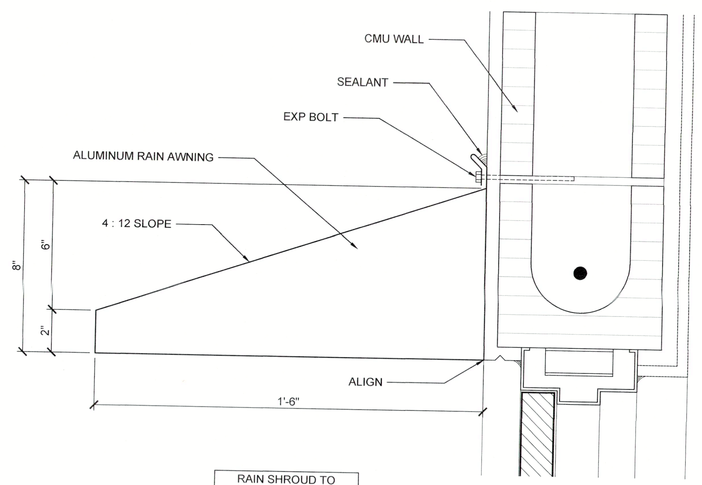

6 ENTRY AWNING DETAIL
SCALE: 1" = 1'-0"

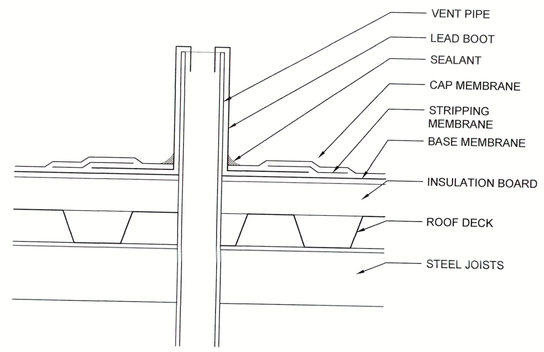

7 VENT FLASHING
SCALE: NTS

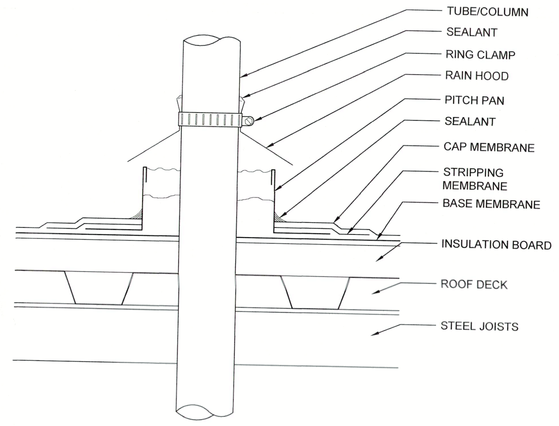

8 PIPE FLASHING
SCALE: NTS

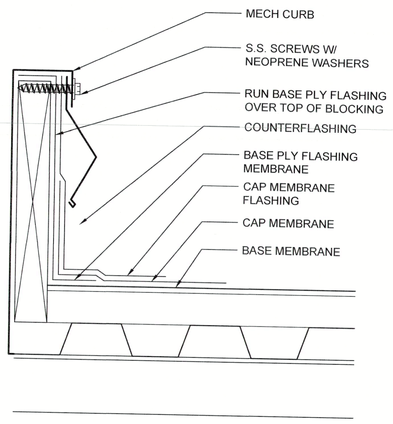

9 MECH CURB DETAIL
SCALE: NTS

RESTROOM GENERAL NOTES

1. BATHROOMS ARE TO COMPLY WITH FLORIDA ACCESSIBILITY CODE FOR BUILDING CONSTRUCTION
2. HOT WATER AND DRAIN PIPES UNDER LAVATORIES TO BE INSULATED TO PROTECT FROM CONTACT
3. THESE DRAWINGS SHALL BE READ IN CONJUNCTION WITH STRUCTURAL, MECHANICAL, PLUMBING, ELECTRICAL AND INTERIOR DECOR DRAWINGS
4. CONTRACTOR TO USE MOISTURE RESISTANT GYP BOARD ON ALL WALLS IN RESTROOMS.
5. CONTRACTOR SHALL INSTALL VINYL COVE OR WOOD BASE AT ALL WALLS IN RESTROOMS
6. FLOORING SHALL BE TILE FLOORING OR EQUAL - PER OWNERS CHOICE
7. DOOR TO RESTROOM TO HAVE HANDICAP RESTROOM SIGNAGE AND BE ON A CLOSER

ACCESSORY SCHEDULE

KEY	DESCRIPTION	MANUF. (* OR APRV'D EQUAL)	MTG HT	REMARKS
1	TOWEL DISPENSER	BOBRICK B-2620	54" AFF TOP OF UNIT	
2	TOILET TISSUE DISPENSER	BOBRICK B-76867	19" AFF @ C.L.	
3	NOT USED			
4	MIRROR (TILTED) 18" X 30"	BOBRICK B-293	40" AFF BTM REFL. SURF.	
5	GRAB BAR W/PEENED SURFACE	BOBRICK B-6806.99 X 36"	36"AFF @ BAR C.L.	
6	GRAB BAR W/PEENED SURFACE	BOBRICK B-6806.99 X 42"	36"AFF @ BAR C.L.	
7	NOT USED			
8	SOAP DISPENSER	BOBRICK B-5050	40" AFF MAX.	

** ALL FIXTURE SPECS ARE AS SPECIFIED, OR EQUAL - COORDINATE CHANGES WITH OWNER

** ALL FIXTURES SHALL COMPLY WITH THE FLORIDA ACCESSIBILITY CODE

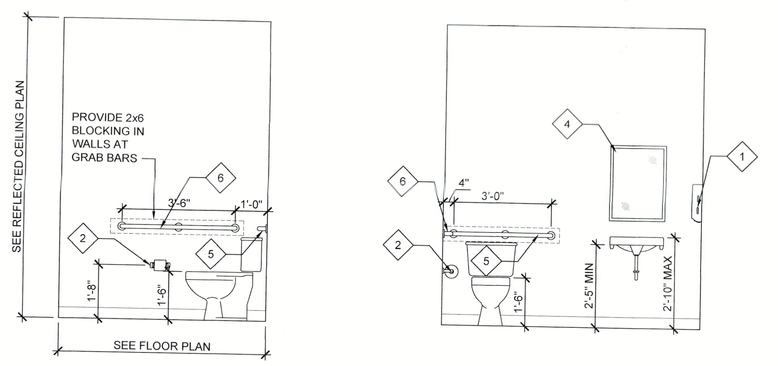

TYP RESTROOM ELEVATIONS
SCALE: NTS

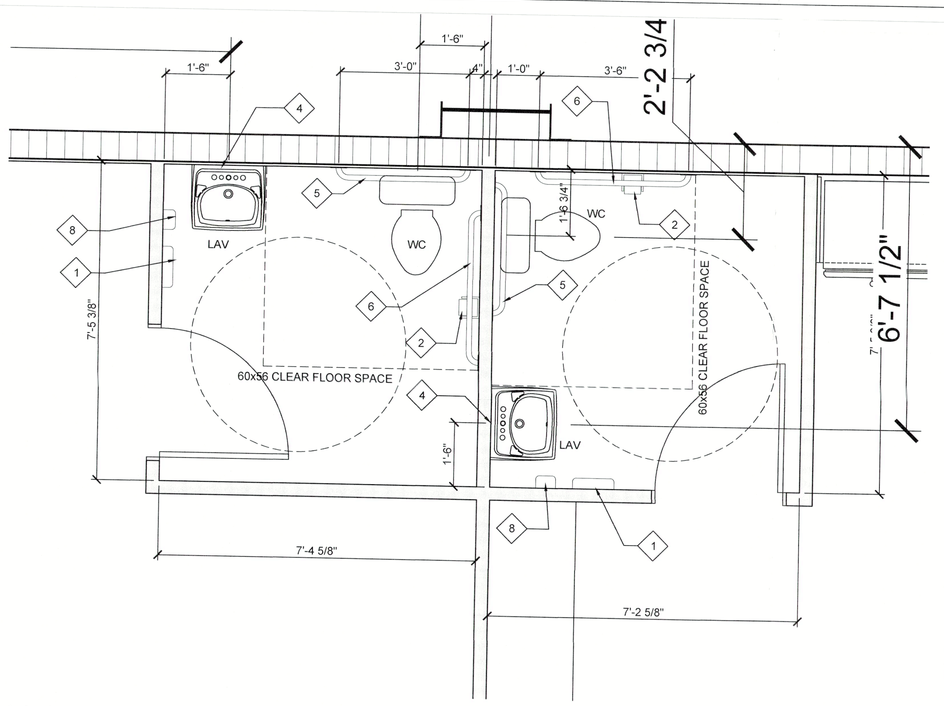

ENLARGED RESTROOM PLAN
SCALE: 1/2" = 1'-0"

RECEIVED
JUN 25 2025
TOWN OF MONROE COUNTY KEY
Planning, Zoning & Building

DO NOT SCALE DRAWINGS FOR DIMENSIONS NOT SHOWN CONTACT PLAN COORDINATOR FOR CLARIFICATION.

JKing DESIGNS
1385 5th Street
Suite 317 - FL 34236
(O) 941.465.0036

⚠	INTR BUILD-OUT
	TENJ - 05/21/2025
△	
△	
△	
△	
△	

BRISTA HOMES

BRISTA COMMONS, BUILDING TWO
3160 GULF OF MEXICO DRIVE
LONGBOAT KEY, FL

ISSUE DATE
07/25/2024

CONSTRUCTION DETAILS

SHEET NUMBER
A4.1

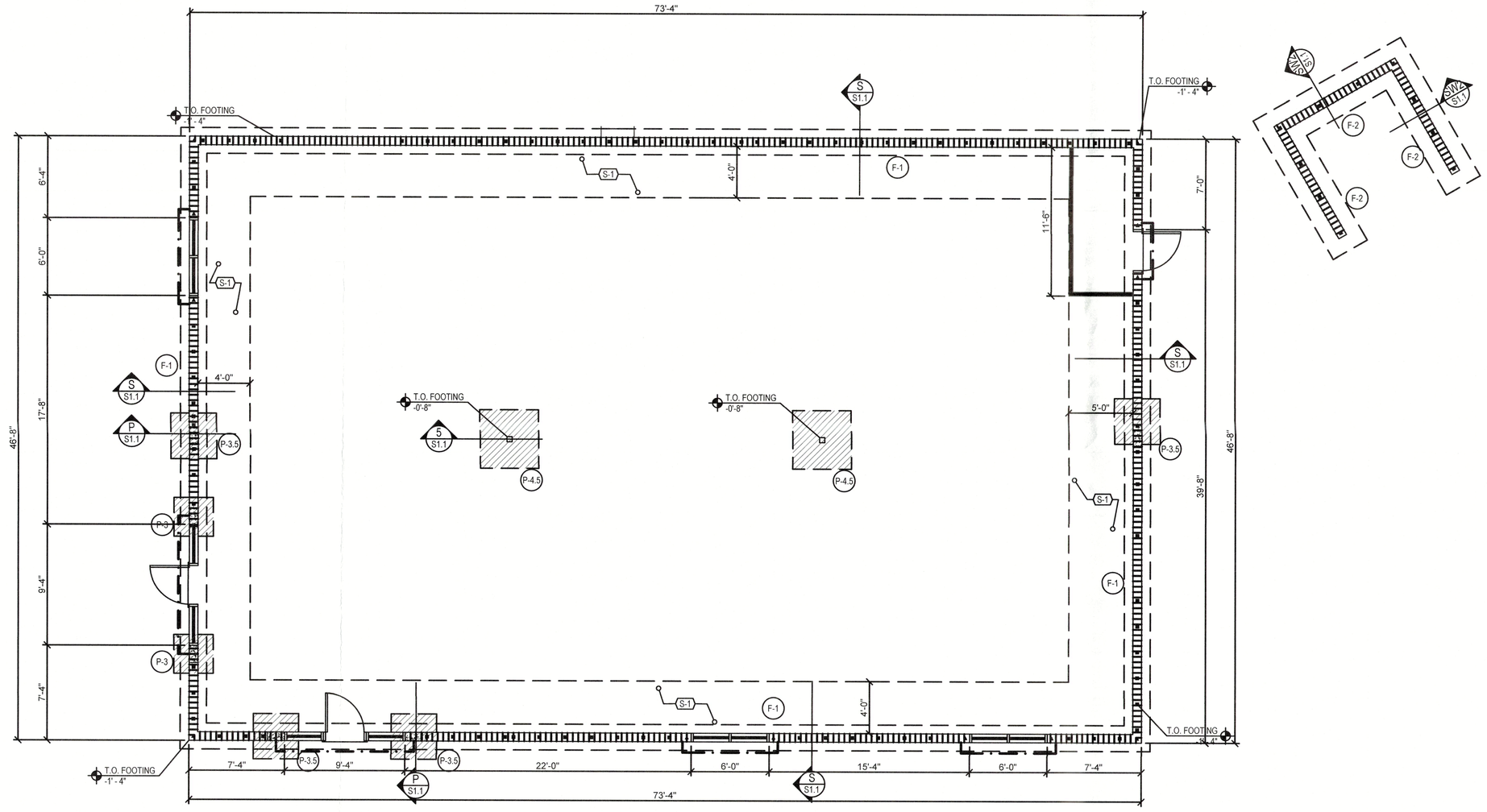

FOUNDATION NOTES

1. DO NOT SCALE FOOTING SIZE FROM PLAN.
2. ISOLATED PAD FOOTINGS AND MONOLITHIC FOOTINGS CAN BE POURED INTEGRALLY, BOTTOMS AT THE SAME ELEVATION.
3. MOISTURE PROTECTION BY OTHERS.
4. TOP OF ALL FOUNDATIONS SHALL BE A MINIMUM OF 6" BELOW ADJACENT GRADE / PAVERS / SLAB.
5. TOP OF GROUND FLOOR SLAB SET AT 0' - 0" (4.5' NAVD) ELEVATIONS SHOWN ARE RELATIVE TO THE GROUND FLOOR SLAB SURFACE.
6. CENTERLINES OF WALLS AND COLUMNS SHALL COINCIDE WITH CENTERLINES OF FOOTINGS AT ALL LOCATIONS, U.N.O.
7. SEE ARCH PLAN FOR EXACT LOCATIONS OF MASONRY WALL CONTROL JOINTS TO COORDINATE WITH VERTICAL STUCCO JOINTS. PROVIDE MASONRY CONTROL JOINTS PER MASONRY WALL CONTROL JOINT DETAIL ON S-1.1. WHERE CONTROL JOINT SPACING SHOWN IN ARCHITECTURAL DRAWINGS EXCEEDS LIMITS INDICATED IN TYPICAL DETAIL, PROVIDE (3) INTERMEDIATE KNOCK OUT COURSE TIE BEAMS WITH TOP OF BEAM ELEVATIONS AT 2' - 8", 6' - 8" AND 10' - 8". INTERMEDIATE TIE BEAMS SHALL EXTEND FROM CONTROL JOINT TO CONTROL JOINT WHERE SPACING AND LAYOUT LIMITS IDENTIFIED IN TYPICAL DETAIL ARE EXCEEDED. PROVIDE (1)#6 CONTINUOUS IN EACH GROUT FILLED KNOCK OUT COURSE TIE BEAM.
8. FOUNDATION DESIGN BASED ON 2,000 PSF SOIL BEARING. CONTRACTOR TO VERIFY PRIOR TO PLACEMENT OF FOUNDATION.

DIMENSION NOTES

1. SEE ARCHITECTURAL PLANS FOR DIMENSIONS NOT SHOWN ON STRUCTURAL SHEETS.
2. VERIFY ALL DIMENSIONS AND ELEVATIONS WITH ARCHITECTURAL DRAWINGS. SEE ARCHITECTURAL AND MEP PLANS FOR ADDITIONAL INFORMATION.

CONCRETE SLAB NOTES

1. SLAB ON GRADE: 4" CONCRETE SLAB - 3000 PSI W/ 6X6 - W1.4 X W 1.4 W.W.F. AT MID-DEPTH OVER 6 MIL VAPOR BARRIER OVER MECHANICALLY COMPACTED FILL TREAT SOIL FOR TERMITE POISONING PER FBC
2. CONTROL JOINTS: PROVIDE CONTROL JOINTS IN ALL SLABS ON GRADE. CONTROL JOINTS SHALL BE TOOLED OR SAWCUT AS SOON AS POSSIBLE WITHOUT RAVELING. THE PATTERN SHALL BE APPROXIMATELY SQUARE AND LIMITED TO AN AREA OF 144 SF.
3. REFER TO SHEET S4.0 'GENERAL NOTES' FOR COMPACTION REQUIREMENTS.

FILLED CELLS LEGEND

■	INDICATES FILLED CELL w/ (1) NO.5 REBAR CONTINUOUS FROM TIE-BEAM (OR FOOTING) AT LEVEL BELOW TO TIE-BEAM ABOVE, PROVIDE 8" HOOKS
▲	INDICATES FILLED CELL w/ (2) NO.5 REBAR CONTINUOUS FROM TIE-BEAM (OR FOOTING) AT LEVEL BELOW TO TIE-BEAM ABOVE, PROVIDE 8" HOOKS
□	INDICATES FILLED CELL w/ (1) NO.5 REBAR CONTINUOUS FROM TIE-BEAM (OR FOOTING) AT LEVEL BELOW TO SLAB, TOP OF LOW WALL, OR BOTTOM OF OPENING ABOVE PROVIDE 8" HOOKS

STRUCTURAL NOTES (S-1)

MARK	DESCRIPTION
S-1	SLAB ON GRADE: 4" CONCRETE SLAB W.W.F. SLOPE TO DRAIN AS REQ'D.

WALL FOOTING SCHEDULE (F-1)

MARK	SIZE / TYPE	REINFORCING	REMARKS
F-1	12"H x 24"W STRIP FTG.	(3) #5s CONT.	REFER TO 4 COURSE DETAIL S ON SHEET S1.1
F-2	12"H x 36"W STRIP FTG.	(5) #5s CONT. #5s AT 16" O.C. TRANS.	REFER TO TYPICAL DETAIL SW2 ON SHEET S1.1

PAD FOOTING SCHEDULE (P-1)

MARK	SIZE	REINFORCING	REMARKS
P-2	24" x 24" x 12" PAD	(3) #5s EACH WAY	REFER TO DETAIL ON SHEET S1.1.
P-2.5	30" x 30" x 12" PAD	(3) #5s EACH WAY	REFER TO DETAIL ON SHEET S1.1.
P-3	36" x 36" x 12" PAD	(5) #5s EACH WAY	REFER TO DETAIL ON SHEET S1.1.
P-3.5	42" x 42" x 12" PAD	(5) #5s EACH WAY	REFER TO DETAIL ON SHEET S1.1.
P-4	48" x 48" x 18" PAD	(6) #5s EACH WAY	REFER TO DETAIL ON SHEET S1.1.
P-4.5	54" x 54" x 18" PAD	(6) #5s EACH WAY	REFER TO DETAIL ON SHEET S1.1.

THESE DRAWINGS HAVE BEEN ELECTRONICALLY SIGNED AND SEALED BY **STEPHEN E. HEDRICK II, PE.** USING A DIGITAL SIGNATURE. PRINTED COPIES OF THIS DOCUMENT ARE NOT CONSIDERED SIGNED AND SEALED. THE SIGNATURE MUST BE VERIFIED ON ANY ELECTRONIC COPIES.
SIGNED: STRUCTURAL ONLY
DATE SEALED: **08.20.2024**

STEPHEN E HEDRICK II LICENSE No. 81830 STATE OF FLORIDA PROFESSIONAL ENGINEER

Stephen E Hedrick II
2024.08.20 16:21:20-04'00'

THE STRUCTURAL SYSTEMS OF THE BUILDING IS DESIGNED, CONNECTED AND ANCHORED TO RESIST FLOTATION, COLLAPSE OR PERMANENT LATERAL MOVEMENT DUE TO STRUCTURAL LOADS AND STRESSES FROM FLOODING EQUAL TO THE DESIGN FLOOD ELEVATION.

RECEIVED
AUG 2 8 2024
TOWN OF LONGBOAT KEY
Planning, Zoning & Building

© by YOUNG & HEDRICK ENGINEERING, LLC. ALL RIGHTS RESERVED

YOUNG & HEDRICK STRUCTURAL ENGINEERING
FBPE# 34899
6771 Professional Parkway West
Suite #201 - Lakewood Ranch, FL 34240
www.YHEngineers.com ■ Tel (941)306-1225
STEPHEN E HEDRICK II, PE
FL CA# 81830

A Custom Home for:
OUTPARCEL COMMERCIAL BUILDING TWO
3160 GULF OF MEXICO DRIVE LONGBOAT KEY, FL

FOUNDATION PLAN
3/16" = 1' - 0"

REVISIONS	
BY	DATE
-	-
-	-
-	-
-	-
-	-
-	-
NPM	10.20.2022

S1.0

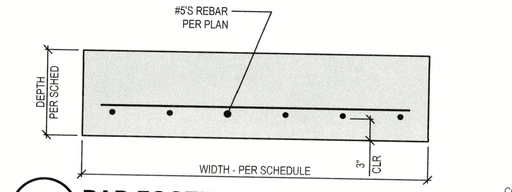

P PAD FOOTING, TYP.
NTS

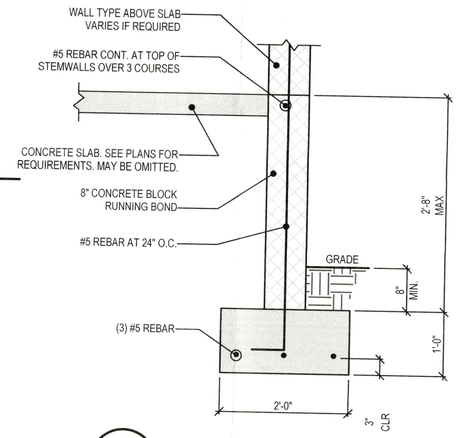

S UPTO 4 COURSE STEM WALL
SCALE : NTS

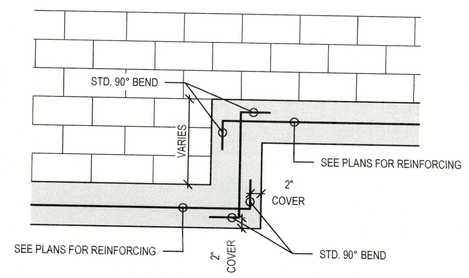

FOOTER STEP DETAIL, TYPICAL
1/2" = 1' - 0"

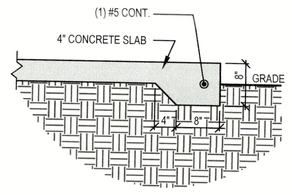

M3 SLAB EDGE - EQUIPMENT PAD
3/4" = 1' - 0"

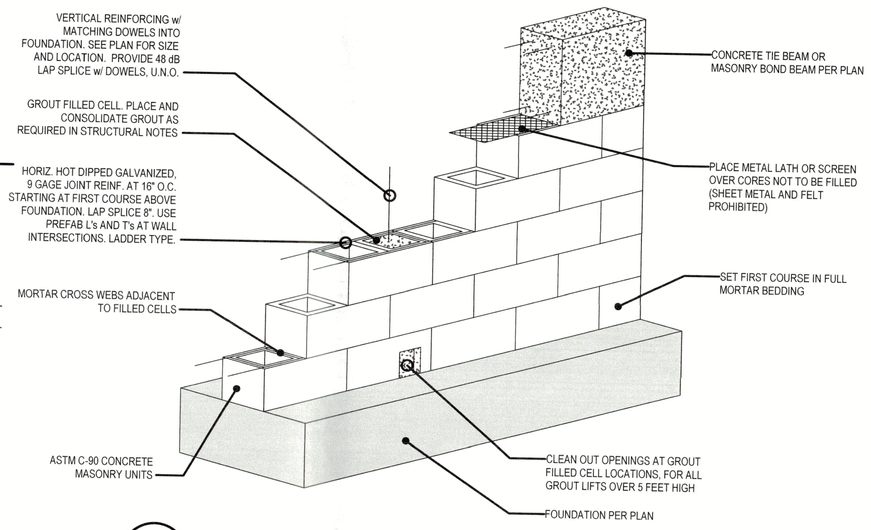

2 TYPICAL MASONRY WALL CONSTRUCTION
Scale

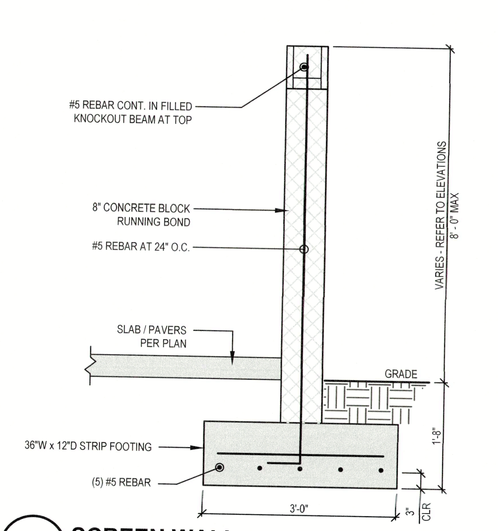

SW2 SCREEN WALL
3/4" = 1' - 0"

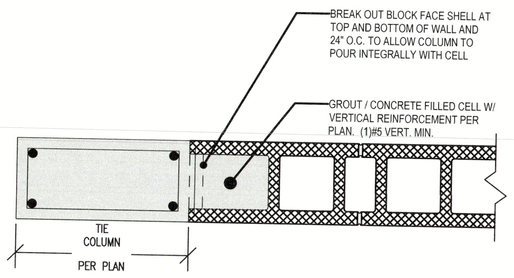

3 TYP.CONC-TIE COLUMN DETAIL
Scale: NTS

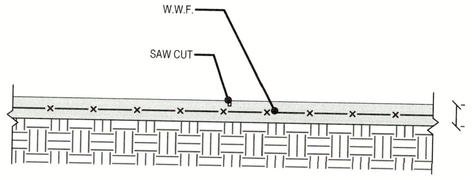

CONSTRUCTION JOINT

NOTES:
1. USE T/4 DEEP SAWCUT WITHIN 8 HOURS OF CONCRETE PLACEMENT.

1 TYPICAL SLAB ON GRADE DETAIL
Scale

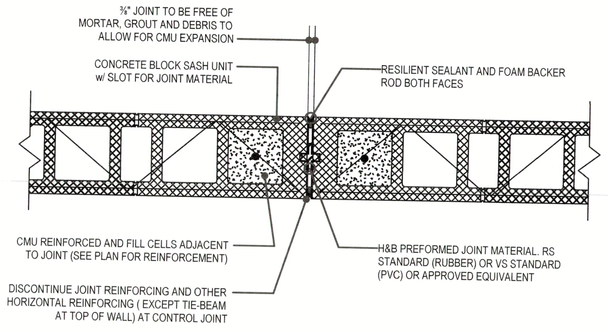

NOTES:
1. COORDINATE LOCATION OF CMU CONTROL JOINTS WITH CONCRETE WALL AND STUCCO CONTROL JOINTS WHERE POSSIBLE.
2. BLOCK CONTROL JOINTS SHALL BE AT SPACING OF NO MORE THAN 25 FEET BETWEEN JOINTS AND NO MORE THAN 12 FEET FROM A BUILDING CORNER.
3. CONTROL JOINTS SHALL BE LOCATED AT CHANGES IN WALL HEIGHTS AND CHANGES IN WALL THICKNESS.
4. CONTROL JOINTS ADJACENT TO WALL OPENINGS SHALL BE NO CLOSER THAN 8" TO THE OPENING. DEPENDING ON THE OPENING WIDTH, THE JOINT MAY NEED TO BE FURTHER AWAY SO THAT MULTIPLE REINFORCED CELLS CAN BE LOCATED BETWEEN THE CONTROL JOINT AND THE WALL OPENING. FOR OPENINGS OVER 4 FEET IN WIDTH, CONSULT WITH THE ENGINEER FOR JOINT LOCATIONS NEXT TO WALL OPENINGS.
5. SEE THE ARCHITECTURAL DRAWINGS FOR JOINT LOCATIONS. IF THE ARCHITECTURAL DRAWINGS CONFLICT WITH THE ABOVE REQUIREMENTS, THE ARCHITECT AND STRUCTURAL ENGINEER SHALL BE CONSULTED BY THE CONTRACTOR.
6. BLOCK WALL JOINTS THAT LINE UP WITH FLOOR AND ROOF EXPANSION JOINTS SHALL BE DETAILED ESPECIALLY TO ALLOW A HIGHER MAGNITUDE OF MOVEMENT THAN THIS CONTROL JOINT DETAIL WILL ALLOW. DO NOT USE THIS DETAIL AT THESE EXPANSION JOINTS.

SEE ARCHITECTURAL DRAWINGS FOR EXACT LOCATIONS OF MASONRY WALL CONTROL JOINTS TO COORDINATE WITH VERTICAL STUCCO JOINTS. PROVIDE MASONRY CONTROL JOINTS AS DETAILED ABOVE. WHERE CONTROL JOINT SPACING SHOWN ON ARCHITECTURAL DRAWINGS EXCEEDS THE LIMITS INDICATED ABOVE, PROVIDE INTERMEDIATE KNOCK OUT COURSE TIE BEAMS AT 4'-0" O.C. FOR HEIGHT OF WALL. KNOCK OUT COURSE TIE BEAM

4 MASONRY WALL - CONTROL JOINT DETAIL
Scale

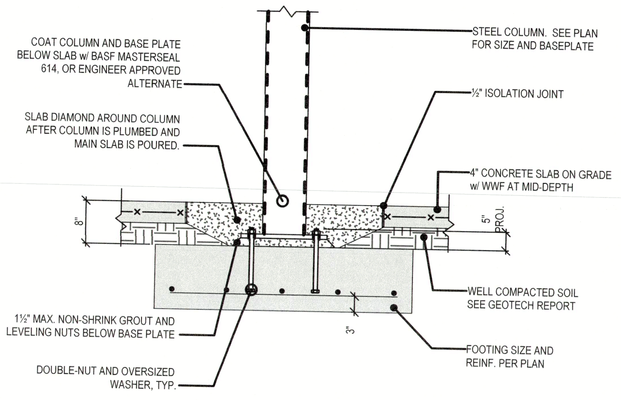

NOTES:
1. PLACE ON COMPACTED SOIL, TYPICAL ALL FOUNDATIONS.
2. FOOTING TO BE CENTERED BELOW COLUMN UNLESS NOTED OTHERWISE.

5 STEEL COLUMN BASE
Scale

(c) by YOUNG & HEDRICK ENGINEERING, LLC. ALL RIGHTS RESERVED

YOUNG & HEDRICK
STRUCTURAL ENGINEERING
FBPE# 34899
6771 Professional Parkway West
Suite #201 - Lakewood Ranch, FL 34240
www.YHEngineers.com ■ Tel (941)306-1225

STEPHEN E HEDRICK II PE
LICENSE No. 81830 STATE OF FLORIDA PROFESSIONAL ENGINEER
E-81830

A Custom Home for:

OUTPARCEL COMMERCIAL BUILDING TWO
3160 GULF OF MEXICO DRIVE LONGBOAT KEY, FL

FOUNDATION DETAILS
NTS

REVISIONS	
BY	DATE
-	-
-	-
-	-
-	-
-	-
-	-
NPM	10.20.2022

S1.1

RECEIVED
AUG 2 8 2024
TOWN OF LONGBOAT KEY
Planning, Zoning & Building

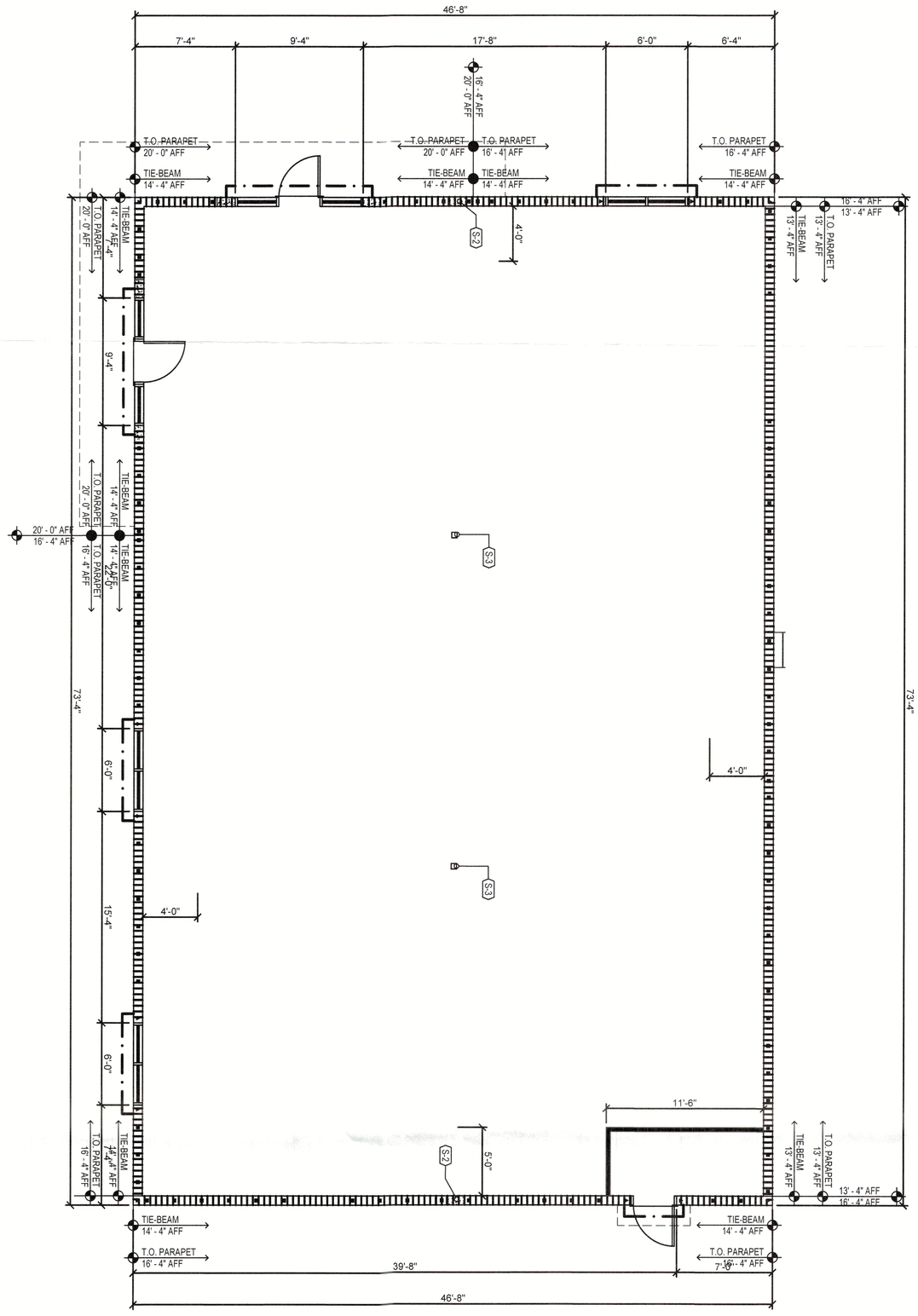

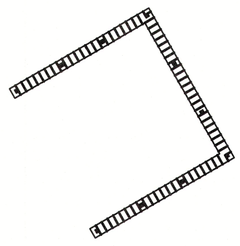

DIMENSION NOTES

1. SEE ARCHITECTURAL PLANS FOR DIMENSIONS NOT SHOWN ON STRUCTURAL SHEETS.
2. VERIFY ALL DIMENSIONS AND ELEVATIONS WITH ARCHITECTURAL DRAWINGS. SEE ARCHITECTURAL AND MEP PLANS FOR ADDITIONAL INFORMATION.

FILLED CELLS LEGEND

■	INDICATES FILLED CELL w/ (1) NO.5 REBAR CONTINUOUS FROM TIE-BEAM (OR FOOTING) AT LEVEL BELOW TO TIE-BEAM ABOVE. PROVIDE 8" HOOKS
▲	INDICATES FILLED CELL w/ (2) NO.5 REBAR CONTINUOUS FROM TIE-BEAM (OR FOOTING) AT LEVEL BELOW TO TIE-BEAM ABOVE. PROVIDE 8" HOOKS
□	INDICATES FILLED CELL w/ (1) NO.5 REBAR CONTINUOUS FROM TIE-BEAM (OR FOOTING) AT LEVEL BELOW TO SLAB, TOP OF LOW WALL, OR BOTTOM OF OPENING ABOVE. PROVIDE 8" HOOKS

STRUCTURAL NOTES (S-1)

MARK	DESCRIPTION
S-1	FILL ALL CELLS ABOVE PRECAST LINTELS.
S-2	CONCRETE TIE COLUMN: 8" x 16" FORM AND POUR CONCRETE COLUMN w/ (4) #6 VERTICAL #3 TIES AT 8" O.C. REFER TO DETAIL 3, SHEET S1.1
S-3	HSSA6X1/4 STEEL COLUMN W/ 12" X 12" X 3/4" BASE PLATE AND (4)3/4" DIA BOLTS WITH MINIMUM 12" EMBEDMENT AND 5" PROJECTION ABOVE THE FOOTING REFER TO DETAIL 5, SHEET S1.1

POST SCHEDULE (P-6)

MARK	DESCRIPTION
P-6	6" X 6" P.T. COLUMN

RECEIVED
AUG 28 2024
TOWN OF LONGBOAT KEY
Planning, Zoning & Building

REVISIONS	BY	DATE
-	-	-
-	-	-
-	-	-
-	-	-
-	-	-

NPM 10.20.2022

S2.0

FIRST STRUCTURAL FLOOR PLAN

3/16" = 1' - 0"

A Custom Home for:

OUTPARCEL COMMERCIAL BUILDING TWO

3160 GULF OF MEXICO DRIVE LONGBOAT KEY, FL

STEPHEN E. HEDRICK II, PE
FLPE# 81830

© by YOUNG & HEDRICK ENGINEERING, LLC; ALL RIGHTS RESERVED

FBPE# 34899
YOUNG & HEDRICK
STRUCTURAL ENGINEERING
6771 Professional Parkway West
Suite #201 - Lakewood Ranch, FL 34240
www.YHEngineers.com ■ Tel (941)306-1225

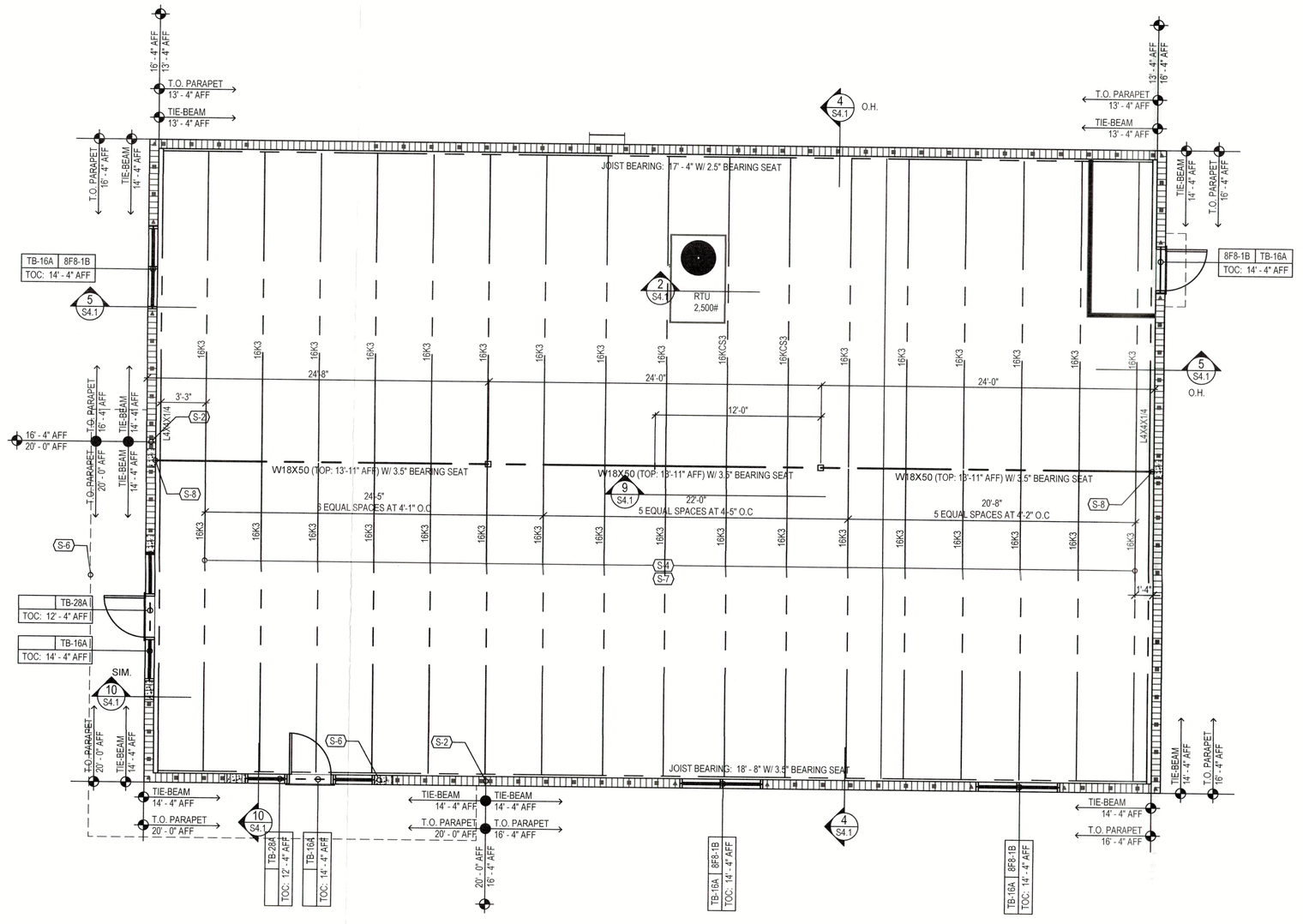

GENERAL NOTES

1. VERIFY ALL DIMENSIONS AND ELEVATIONS WITH ARCHITECTURAL DRAWINGS. SEE ARCHITECTURAL AND MEP PLANS FOR ADDITIONAL INFORMATION.
2. SEE ARCHITECTURAL DRAWINGS FOR ALL SLOPES, DROPS AND DRAIN LOCATIONS IN FLOOR SLAB.
3. CENTERLINES OF WALLS AND COLUMNS SHALL COINCIDE WITH CENTERLINES OF FOOTINGS AT ALL LOCATIONS, U.N.O.
4. FILL ALL CELLS ABOVE PRECAST LINTELS.
5. SHORING: ALL CONCRETE BEAMS AND PRECAST LINTELS 8' OR GREATER SHALL BE SHORED FOR A MINIMUM OF 28 DAYS AFTER CONCRETE / GROUT HAS BEEN POURED.
6. ALL WOOD OR WOOD PRODUCTS IN CONTACT WITH CONCRETE OR MASONRY TO BE MOISTURE PROTECTED OR PRESSURE TREATED.

DIMENSION NOTES

1. SEE ARCHITECTURAL PLANS FOR DIMENSIONS NOT SHOWN ON STRUCTURAL SHEETS.
2. VERIFY ALL DIMENSIONS AND ELEVATIONS WITH ARCHITECTURAL DRAWINGS. SEE ARCHITECTURAL AND MEP PLANS FOR ADDITIONAL INFORMATION.

© by YOUNG & HEDRICK ENGINEERING, LLC. ALL RIGHTS RESERVED

YOUNG & HEDRICK STRUCTURAL ENGINEERING
6771 Professional Parkway West
Suite #201 · Lakewood Ranch, FL 34240
www.YHEngineers.com · Tel (941)306-1225
FBPE# 34899

STEPHEN E HEDRICK LICENSE No. 81830 STATE OF FLORIDA PROFESSIONAL ENGINEER

STEPHEN E. HEDRICK II, PE
FL(R)# 81830

CONCRETE BEAM SCHEDULE

TB-XX
TOP: X' - X" AFF

MARK	DESCRIPTION	TYPE
8F8-1B	8" x 8" PRECAST LINTEL BY CAST-CRETE (1) NO.5 REBAR	1
TB-16A	8" x 16" FORM & POUR CONCRETE BEAM (2) NO. 5 REBAR, TOP (2) NO. 5 REBAR, BOTTOM	2
TB-28A	8" x 28" FORM & POUR CONCRETE BEAM (2) NO. 5 REBAR, TOP (2) NO. 5 REBAR, MIDDLE (4) NO. 6 REBAR BUNDLED, BOTTOM NO. 3 TIES AT 10" O.C.	3

TYPE 1	TYPE 2	TYPE 3
		TOP MIDDLE TIES BOTTOM

STRUCTURAL NOTES S-1

MARK	DESCRIPTION
S-1	TIE BEAM: PROVIDE FORM AND POUR CONCRETE TIE BEAM AT ELEVATION INDICATED ON PLANS. WIDTH TO MATCH WALL X 16" MIN. DEPTH W/ (2) #5 TOP AND BOTTOM REBAR.
S-2	TIE BEAM: REFER TO TIE-BEAM STEP DETAIL ON SHEET S4.1
S-3	PARAPET: MASONRY PARAPET WALL AT ELEVATION PER PLAN. REINFORCING AND THICKNESS TO MATCH WALLS BELOW. PROVIDE (1) #5 CONT. IN FULLY GROUTED COURSE AT TOP.
S-4	ROOF DECK: 1.5" DEEP, 22 GAGE, GALVANIZED, WIDE RIB ROOF DECK. THREE SPAN MINIMUM. ATTACH DECK TO JOISTS WITH 5/8" PUDDLE WELDS AT SUPPORTS (36/5) AND #10 TEK SCREWS AT SIDELAPS (3 PER SPAN).
S-5	MASONRY WALL: PROVIDE #5 AT 24" O.C. ABOVE LINTEL TO RAKE TIE BEAM. PROVIDE HOOK AT LINTEL AND TIE BEAM
S-6	PRE-ENGINEERED ALUMINUM CANOPY AND CONNECTION TO STRUCTURE AS REQUIRED BY SPECIALTY ENGINEER. PROVIDE GROUT FILLED MASONRY FOR FULL HEIGHT AND 24" BEYOND WIDTH OF THE CANOPY.
S-7	ROOF JOISTS TO BE DESIGNED FOR 68-91 PSF NET WIND UPLIFT(ASD) OR AS REQUIRED BY CODE. WHICHEVER IS MORE STRINGENT.
S-8	STEEL BEAM EMBED PLATE-EB-1: REFER TO DETAIL 8/S4.1 FOR ADDITIONAL INFORMATION
S-9	TIE BEAM: PROVIDE FORM AND POUR CONCRETE TIE BEAM AT ELEVATION INDICATED ON PLANS. WIDTH TO MATCH WALL X 24" MIN. DEPTH W/ (2) #5 TOP AND BOTTOM REBAR AND #3 TIES @ 10" O.C.

RECEIVED
AUG 28 2024
TOWN OF LONGBOAT KEY
Planning, Zoning & Building

A Custom Home for:

OUTPARCEL COMMERCIAL BUILDING TWO

3160 GULF OF MEXICO DRIVE LONGBOAT KEY, FL

ROOF FRAMING PLAN

3/16" = 1' - 0"

REVISIONS	
BY	DATE
-	-
-	-
-	-
-	-
-	-
-	-
NPM	10.20.2022

S3.0

GENERAL NOTES

1. FBC REFERS TO 2023 FLORIDA BUILDING CODE, 8TH EDITION.
2. STRUCTURAL DRAWINGS SHALL BE USED IN CONJUNCTION WITH JOB SPECIFICATIONS AND ARCHITECTURAL, MECHANICAL, ELECTRICAL, PLUMBING AND SITE DRAWINGS. CONSULT THESE DRAWINGS FOR SLEEVES, DEPRESSIONS, AND OTHER DETAILS NOT SHOWN ON STRUCTURAL DRAWINGS.
3. ALL DIMENSIONS AND CONDITIONS MUST BE VERIFIED IN THE FIELD. ANY DISCREPANCIES SHALL BE BROUGHT TO THE ATTENTION OF THE ENGINEER BEFORE PROCEEDING WITH THE AFFECTED PART OF THE WORK.
4. THE STRUCTURE IS DESIGNED TO BE SELF SUPPORTING AND STABLE AFTER THE BUILDING IS COMPLETE. IT IS THE CONTRACTOR'S RESPONSIBILITY TO DETERMINE ERECTION PROCEDURES AND SEQUENCE TO INSURE SAFETY OF THE BUILDING AND ITS COMPONENTS DURING ERECTION. THIS INCLUDES THE ADDITION OF NECESSARY SHORING, SHEETING, TEMPORARY BRACING, GUYS AND TIE-DOWNS.

DESIGN LOADS AND NOTES

THE STRUCTURAL SYSTEM FOR THIS BUILDING HAS BEEN DESIGNED IN ACCORDANCE WITH THE 2023 FLORIDA BUILDING CODE, 8TH EDITION. THE FOLLOWING SUPERIMPOSED LOADS HAVE BEEN UTILIZED:

ROOF:

LIVE LOAD	-	20 PSF
DEAD LOAD (SUPERIMPOSTED)	-	20 PSF
DEAD LOAD (FLAT ROOF)	-	8 PSF (TO RESIST UPLIFT)

WIND:

ASCE 7-16		
ULTIMATE WIND SPEED	-	160 MPH
ALLOWABLE WIND SPEED	-	124 MPH
EXPOSURE	-	D
FULLY ENCLOSED STRUCTURE		
RISK FACTOR	-	II

CONCRETE NOTES

GENERAL:

1. ALL CAST IN PLACE CONCRETE SHALL CONFORM TO THE REQUIREMENTS OF ACI 318-19, THE ACI MANUAL OF STANDARD PRACTICE, AND THE CRSI MANUAL OF STANDARD PRACTICE.
2. ALL CONCRETE SHALL BE NORMAL WEIGHT 145 PCF WET CONCRETE DENSITY AND SHALL BE SUBMITTED TO THE ENGINEER FOR APPROVAL BEFORE USE, WITH COMPRESSIVE STRENGTHS AS FOLLOWS:
   FOUNDATIONS AND SLAB ON GRADE: - 3000 psi
   ALL OTHER STRUCTURAL CONCRETE: - 4000 psi
3. CONCRETE SHALL BE PLACED AND CURED ACCORDING TO ALL STANDARDS AND SPECIFICATIONS.
4. SUBMIT PROPOSED MIX DESIGN WITH RECENT FIELD CYLINDER OR LAB TESTS FOR REVIEW PRIOR TO USE. MIX SHALL BE UNIQUELY IDENTIFIED BY MIX NUMBER OR OTHER POSITIVE IDENTIFICATION. MIX SHALL MEET THE REQUIREMENTS OF ASTM C33 FOR COARSE AGGREGATE. FOR ALL FLATWORK, AT LEAST 75% OF LARGE AGGREGATE SHALL CONSIST OF #57 STONE. CONCRETE SHALL COMPLY WITH ALL THE REQUIREMENTS OF ASTM STANDARD C94 FOR MEASURING, MIXING, TRANSPORTING, ETC. CONCRETE TICKETS SHALL BE TIME STAMPED WHEN CONCRETE IS BATCHED.
5. THE MAXIMUM TIME ALLOWED FROM THE TIME THE MIXING WATER IS ADDED UNTIL IT IS DEPOSITED IN ITS FINAL POSITION SHALL NOT EXCEED ONE AND ONE HALF (1-1/2) HOURS. IF FOR ANY REASON THERE IS A LONGER DELAY THAN THAT STATED ABOVE, THE CONCRETE SHALL BE DISCARDED. IT SHALL BE THE RESPONSIBILITY OF THE TESTING LAB TO NOTIFY THE OWNER'S REPRESENTATIVE AND THE CONTRACTOR OF ANY NONCOMPLIANCE WITH THE ABOVE. ALL SLABS SHALL BE CURED USING A DISSIPATING CURING COMPOUND MEETING ASTM STANDARD C309 TYPE 1-D AND SHALL HAVE A FUGITIVE DYE. THE COMPOUND SHALL BE PLACED AS SOON AS THE FINISHING IS COMPLETED OR AS SOON AS THE WATER HAS LEFT THE UNFINISHED CONCRETE. ALL SCUFFED OR BROKEN AREAS IN THE CURING MEMBRANE SHALL BE RECOATED DAILY. CALCIUM CHLORIDES SHALL NOT BE UTILIZED; OTHER ADMIXTURES MAY BE USED ONLY WITH THE APPROVAL OF THE ENGINEER.
6. CONCRETE SHALL NOT BE DROPPED THROUGH REINFORCING STEEL SO AS TO CAUSE SEGREGATION OF AGGREGATE. HOPPERS, VERTICAL CHUTES, OR TRUNKS SHALL BE USED IN SUFFICIENT NUMBERS SO THAT THE FREE UNCONFINED FALL OF CONCRETE SHALL NOT EXCEED SIX FEET AND TO ENSURE THAT THE CONCRETE IS KEPT LEVEL AT ALL TIMES.
7. SAND BLAST EXISTING CONCRETE TO 1/4" AMPLITUDE BEFORE FRESH CONCRETE IS PLACED AGAINST CONCRETE IN PLACE, THE CONTACT SURFACE OF CONCRETE IN-PLACE SHALL BE THOROUGHLY CLEANED. ALL LAITANCE SHALL BE REMOVED AND THE CONTACT SURFACES SHALL BE THOROUGHLY SLOSHED WITH GROUT CONSISTING OF ONE PART SAND TO ONE PART CEMENT WITH MINIMUM WATER.

PLUMBING SLEEVES / CONDUIT :

1. MINIMUM SLEEVE / CONDUITS SPACING IN CONCRETE SHALL BE SPACED SUCH THAT THE CENTER TO CENTER DISTANCE BETWEEN CONDUITS IS A MINIMUM OF THREE TIMES THE OUTSIDE DIAMETER OF THE LARGEST SLEEVE / CONDUIT.
2. CONDUIT HAVING OUTSIDE DIAMETER LARGER THAN ONE THIRD OF THE SLAB THICKNESS SHALL NOT BE PERMITTED.
3. CONDUITS THAT CROSS EACH OTHER IN SLAB SHALL NOT CONSUME AT POINT OF INTERSECTION MORE THAN ONE THIRD OF THE SLAB THICKNESS.
4. ALUMINUM CONDUITS ARE NOT PERMITTED IN CONCRETE ELEMENTS.
5. PRIOR TO CONSTRUCTION SLEEVE LOCATIONS AND SIZES SHALL BE APPROVED BY THE ENGINEER.

REINFORCING STEEL :

1. REINFORCING STEEL TO CONFORM TO ASTM A615 GRADE 60 DEFORMED BARS, FREE FROM OIL, SCALE AND RUST AND PLACED IN ACCORDANCE WITH THE TYPICAL BENDING DIAGRAM AND PLACING DETAILS OF ACI STANDARDS AND SPECIFICATIONS. SECURE APPROVAL OF SHOP DRAWINGS PRIOR TO COMMENCING FABRICATION.
2. WELDED WIRE MESH TO CONFORM TO ASTM A-185, FREE FROM OIL, SCALE AND RUST AND PLACED IN ACCORDANCE WITH THE TYPICAL PLACING DETAILS OF ACI STANDARDS AND SPECIFICATIONS. MINIMUM LAP SHALL BE ONE SPACE PLUS TWO INCHES.
3. LAP LENGTH OF INDIVIDUAL BARS WITHIN A BUNDLE SHALL BE THAT FOR THE INDIVIDUAL BAR, INCREASED 20% FOR THREE-BAR BUNDLE, AND 33% FOR FOUR-BAR BUNDLE.
4. INDIVIDUAL BARS WITHIN A BUNDLE TERMINATED WITHIN THE SPAN OF THE BEAM SHALL TERMINATE AT DIFFERENT POINTS WITH AT LEAST 40 BAR DIA. STAGGER.
5. ALL WELDING OF REINFORCING TO BE DONE WITH E90XX ELECTRODES IN ACCORDANCE WITH A.W.S. SPECIFICATIONS D1.4 (LATEST EDITION).
6. ALL MECHANICAL SPLICES USED MUST BE "TENSION-COMPRESSION" TYPE AND SHALL COMPLY WITH ACI 318 SECTION 12.14.3 UNLESS OTHERWISE SPECIFICALLY APPROVED BY THE STRUCTURAL ENGINEER. SHOP DRAWINGS SUBMITTED FOR ENGINEERS APPROVAL MUST INDICATE THE USE AND TYPE OF ANY MECHANICAL SPLICES USED. SPLICE MUST DEVELOP 125% OF REBAR YIELD STRENGTH.
7. UNLESS NOTED OTHERWISE ON PLANS, THE FOLLOWING CONCRETE CLEAR COVER SHALL BE PROVIDED FOR ALL NON-PRESTRESSED CONCRETE REINFORCEMENT PER ACI 318:

CONCRETE CAST AGAINST EARTH:	ALL BARS	-	3"
CONCRETE EXPOSED TO EARTH (FORMED FACE):	ALL BARS	-	2"
CONCRETE EXPOSED TO WEATHER:	#6 BARS AND GREATER	-	2"
	#5 BARS AND SMALLER	-	1-1/2"
WHERE NOT EXPOSED TO EARTH OR WEATHER:			
SLABS, WALLS AND JOISTS:	#14 AND #18 BARS	-	1-1/2"
	#11 BARS AND SMALLER	-	3/4"
BEAMS AND COLUMNS:	ALL BARS	-	1-1/2"

MIX DESIGN / TESTING :

1. SUBMIT PROPOSED MIX DESIGN WITH RECENT FIELD CYLINDER OR LAB TESTS FOR REVIEW PRIOR TO USE. MIX SHALL BE UNIQUELY IDENTIFIED BY MIX NUMBER OR OTHER POSITIVE IDENTIFICATION. MIX SHALL MEET THE REQUIREMENTS OF ASTM C33 FOR COARSE AGGREGATE. FOR ALL FLATWORK, AT LEAST 75% OF LARGE AGGREGATE SHALL CONSIST OF #57 STONE. CONCRETE SHALL COMPLY WITH ALL THE REQUIREMENTS OF ASTM STANDARD C94 FOR MEASURING, MIXING, TRANSPORTING, ETC. CONCRETE TICKETS SHALL BE TIME STAMPED WHEN CONCRETE IS BATCHED.
2. THE MAXIMUM TIME ALLOWED FROM THE TIME THE MIXING WATER IS ADDED UNTIL IT IS DEPOSITED IN ITS FINAL POSITION SHALL NOT EXCEED ONE AND ONE HALF (1-1/2) HOURS. IF FOR ANY REASON THERE IS A LONGER DELAY THAN THAT STATED ABOVE, THE CONCRETE SHALL BE DISCARDED. IT SHALL BE THE RESPONSIBILITY OF THE TESTING LAB TO NOTIFY THE OWNER'S REPRESENTATIVE AND THE CONTRACTOR OF ANY NONCOMPLIANCE WITH THE ABOVE. ALL SLABS SHALL BE CURED USING A DISSIPATING CURING COMPOUND MEETING ASTM STANDARD C309 TYPE 1-D AND SHALL HAVE A FUGITIVE DYE. THE COMPOUND SHALL BE PLACED AS SOON AS THE FINISHING IS COMPLETED OR AS SOON AS THE WATER HAS LEFT THE UNFINISHED CONCRETE. ALL SCUFFED OR BROKEN AREAS IN THE CURING MEMBRANE SHALL BE RECOATED DAILY. CALCIUM CHLORIDES SHALL NOT BE UTILIZED; OTHER ADMIXTURES MAY BE USED ONLY WITH THE APPROVAL OF THE ENGINEER.
3. ALL CONCRETE MIX DESIGNS SHALL INCLUDE A WRITTEN DESCRIPTION INDICATNG WHERE EACH PARTICULAR MIX IS TO BE PLACED WITHIN THE STRUCTURE.
4. ALL CONCRETE DESIGN MIX SUBMITTALS SHALL INCLUDE TESTED, STATISTICAL BACK-UP DATA AS PER CHAPTER 5 OF ACI 318.
5. AN INDEPENDENT TESTING LABORATORY SHALL PERFORM THE FOLLOWING TESTS ON CAST IN PLACE CONCRETE:
   A. ASTM C143 - "STANDARD TEST METHOD FOR SLUMP OF PORTLAND CEMENT CONCRETE." MAXIMUM SLUMP SHALL BE 4-6 INCHES, PRIOR TO ADDING A SUPER PLASTISIZER.
   B. ASTM C39 - "STANDARD TEST METHOD FOR COMPRESSIVE STRENGTH OF CYLINDRICAL CONCRETE SPECIMENS." A SEPARATE TEST SHALL BE CONDUCTED FOR EACH CLASS, FOR EVERY 50 CUBIC YARDS (OR FRACTION THEREOF), PLACED PER DAY. REQUIRED CYLINDER(S) QUANTITIES AND TEST AGE AS FOLLOWS: 1 AT 7 DAYS, 2 AT 28 DAYS
6. ONE ADDITIONAL RESERVE CYLINDER TO BE TESTED UNDER THE DIRECTION OF THE ENGINEER, IF REQUIRED. IF 28 DAY STRENGTH IS ACHIEVED, THE ADDITIONAL CYLINDER(s) MAY BE DISCARDED.

NON-SHRINK GROUT

1. NON-SHRINK GROUT SHALL BE A HIGH-STRENGTH MORTAR OR GROUT WITH A MINIMUM COMPRESSIVE STRENGTH OF 5000 psi AT 28 DAYS. THE GROUT IS TO BE NON-METALLIC, NON-CORROSIVE, CEMENT-BASED AND SHALL CONFORM TO THE REQUIREMENTS OF ASTM C1107. IT SHALL BOND PERMANENTLY TO A CLEAN METAL BASEPLATE AND CONCRETE SUBSTRATE AND WILL NOT SHRINK IN ITS PLASTIC STATE, AS TESTED IN ACCORDANCE WITH ASTM C827.

CHEMICAL ANCHORS

1. SHALL BE AN EQUAL TWO PART EPOXY POLYMER INJECTION SYSTEM, SUCH AS SIMPSON SET-XP "STRUCTURAL ANCHORING ADHESIVE", HILTI HIT-HY 150 MAX-SD OR ENGINEER APPROVED SUBSTITUTION, INSTALLED IN ACCORDANCE WITH MANUFACTURERS INSTRUCTIONS. INSTALLERS SHALL BE TRAINED BY THE MANUFACTURER'S REPRESENTATIVE. BRUSH AND BLOW OUT ALL HOLES.

STRUCTURAL STEEL

1. ALL STRUCTURAL STEEL WIDE FLANGE MEMBERS SHALL CONFORM TO ASTM SPECIFICATION A-992 U.N.O. PLATES, ANGLES, CHANNELS AND BARS SHALL BE A-36.
2. TUBES SHALL CONFORM TO ASTM A-500 GRADE B. PIPES SHALL CONFORM TO ASTM A-53 TYPE E OR S GRADE B.
3. HIGH STRENGTH STEEL BOLTS SHALL CONFORM TO ASTM A-325 OR A-490. ANCHOR RODS SHALL CONFORM TO ASTM F-1554 GRADE 36.
4. WELDING ELECTRODES SHALL BE E-70XX.
5. SINGLE PLATE SHEAR (SHEAR TABS) AND SINGLE ANGLE CONNECTIONS ARE NOT ALLOWED EXCEPT WHERE SPECIFICALLY SHOWN ON DRAWINGS.
6. WHEN BEAM FLANGES ARE COPED MORE THAN DISTANCE K, SHEAR AND MOMENT CAPACITY OF THE REMAINING WEB MUST BE CHECKED BY THE DETAILER, UNLESS CONNECTION CLIP ANGLES ARE EXTENDED 1" BEYOND THE COPE.
7. ALL BUTT WELDS SHALL BE FULL PENETRATION BUTT WELDS.
8. SPLICING OF STRUCTURAL STEEL MEMBERS WHERE NOT DETAILED IS PROHIBITED WITHOUT PRIOR APPROVAL OF THE ENGINEER.
9. FABRICATE AND ERECT STEEL BEAMS WITH THE NATURAL CAMBER UP. ANY ADDITIONAL CAMBER IS CALLED OUT ON THE DRAWINGS AS "C = 1-1/2"".
10. STRUCTURAL STEEL SHALL MEET THE FOLLOWING REQUIREMENTS:
    - THE MINIMUM PLATE THICKNESS SHALL BE .....1/2" (U.N.O.)
    - THE MINIMUM BOLT DIAMETER SHALL BE .....3/4" (U.N.O.)
    - THE MINIMUM THROAT SHALL BE .....3/16" (U.N.O.)
11. BASE PLATES, BEAMS, COLUMNS AND HARDWARE EXPOSED TO SOIL SHALL BE COVER WITH MINIMUM OF 3" CONCRETE PRIOR TO BACKFILL. STEEL NOT PROTECTED WITH CONCRETE SHALL BE COATED WITH BITUMASTIC.
12. STEEL LINTELS AND SHELF ANGLES ARE TO BE GALVANIZED IN ACCORDANCE WITH ASTM A123 AND ASTM A384.
13. GALVANIZED STEEL AND ITS CONNECTORS SHALL CONFORM TO ASTM A123, ASTM A153, ASTM A384, AND THE RECOMMENDATIONS OF THE "AMERICAN HOT DIP GALVANIZERS ASSOCIATION STANDARD SPECIFICATION". ABRADED, SCRAPED, AND FIELD WELDED AREAS SHALL BE REPAIRED WITH ZINC-RICH PAINT.
14. ALL TEMPORARY ERECTION BRACING AND TIE RODS SHALL REMAIN IN PLACE UNTIL ALL STRUCTURAL MEMBERS ARE PROPERLY ALIGNED AND CONNECTED AND SHALL NOT BE REMOVED WITHOUT WRITTEN APPROVAL OF THE TESTING AGENCY.
15. THE CONTRACTOR SHALL BE RESPONSIBLE FOR THE CONTROL OF ALL ERECTION PROCEDURES AND SEQUENCES.
16. ANY BOLTED CONNECTION INDICATED ON THE DRAWINGS CAN BE SUBSTITUTED WITH A WELDED ONE (SHOP OR FIELD) OF EQUAL CAPACITY, IF BOLTING CLEARANCES REQUIRE SO. SUBSTITUTION SHALL BE AT NO EXTRA COST TO THE OWNER AND ONLY AFTER APPROVAL OF THE ENGINEER AND TESTING AGENCY.
17. ALL CONNECTIONS SHALL BE THE RESPONSIBILITY OF THE STEEL FABRICATOR. ALL CONNECTIONS SHALL BE DESIGNED BY A PROFESSIONAL ENGINEER REGISTERED IN THE STATE OF FLORIDA AND ENGAGED BY THE STEEL FABRICATOR. FACTORED LOADS AT THE CONNECTIONS ARE SHOWN ON THE STRUCTURAL PLANS OR WILL BE PROVIDED BY THE STRUCTURAL ENGINEER OF RECORD UPON REQUEST. THE STEEL FABRICATOR'S CONNECTION DESIGNER SHALL SUBMIT CALCULATIONS TO THE STRUCTURAL ENGINEER OF RECORD FOR REVIEW. THE CALCULATIONS SHALL BE STAMPED WITH THE PROFESSIONAL REGISTRATION OF THE CONNECTION DESIGNER. THE CONNECTION DESIGNER SHALL REVIEW AND STAMP ALL SHOP DRAWINGS OF HIS CONNECTION DESIGNS. SHOP DRAWINGS SHALL BE SUBMITTED TO THE STRUCTURAL ENGINEER OF RECORD AFTER THEY HAVE BEEN STAMPED APPROVED BY THE GENERAL CONTRACTOR AND AFTER THE CONNECTION DESIGNER HAS REVIEWED AND STAMPED THE SHOP DRAWINGS WITH HIS PROFFESIONAL REGISTRATION.
18. SHEAR CONNECTIONS FOR ALL COMPOSITE AND NON-COMPOSITE BEAMS SHALL BE DESIGNED FOR THE REACTION SHOWN ON THE PLAN. IF NO REACTION IS SHOWN ON THE PLAN, SHEAR CONNECTIONS FOR THE NON-COMPOSITE BEAMS SHALL BE DESIGNED FOR THE LOAD CAPACITY OF A SIMPLE SPAN BEAM WITH CONTINUOUS LATERAL SUPPORT.

MASONRY

1. ALL MASONRY CONSTRUCTION SHALL COMPLY WITH CURRENT EDITION OF ACI 530/ASCE 5/TMS 402, "BUILDING CODE REQUIREMENTS FOR MASONRY STRUCTURES".
2. HOLLOW LOAD BEARING UNITS SHALL CONFORM TO ASTM C90, NORMAL WEIGHT, TYPE II, MINIMUM NET COMPRESSIVE UNIT STRENGTH = 1900PSI
3. MORTAR SHALL BE TYPE M OR S AND CONFORM TO ASTM C270 (PROPORTION OR PROPERTY SPECIFICATION)
4. COURSE GROUT SHALL CONFORM TO ASTM C476:
   A. 3000 PSI AT 28 DAYS
   B. 3/8" MAXIMUM AGGREGATE
   C. 8" - 11" SLUMP
5. GALVANIZED HORIZONTAL JOINT REINFORCEMENT SHALL BE PLACED IMMEDIATELY ABOVE AND BELOW ALL OPENINGS AND AT 16" O.C. PROVIDE BOND BEAM AT MAXIMUM SPACING OF 8'-0" O.C. REINFORCED WITH (2) #5.
6. ALL VERTICAL WALL REINFORCEMENT INTERRUPTED BY WALL OPENINGS, THE EQUAL AMOUNT OF REINFORCING SHALL BE PLACED IMMEDIATELY ADJACENT TO EACH SIDE OF THE OPENINGS.
7. ALL MASONRY CELLS CONTAINING BOLTS OR REINFORCEMENT SHALL BE FILLED WITH (FINE OR COARSE) GROUT PER SPECIFICATIONS.
8. GROUT SHALL NOT BE DROPPED THROUGH REINFORCING STEEL SO AS TO CAUSE SEGREGATION OF AGGREGATE. HOPPERS, VERTICAL CHUTES, OR TRUNKS SHALL BE USED IN SUFFICIENT NUMBERS SO THAT THE FREE UNCONFINED FALL OF GROUT SHALL NOT EXCEED FIVE FEET AND TO ENSURE THAT THE GROUT IS KEPT LEVEL AT ALL TIMES.
9. GROUT SHALL BE PLACED IN LIFTS NOT EXCEEDING 5 FEET.
10. PROVIDE DOWELS WITH STANDARD BAR HOOK IN FOOTING TO MATCH DIAMETER AND SPACING OF VERTICAL REINFORCEMENT. MINIMUM SPLICE LENGTH = 24 INCHES.
11. PROVIDE 2-#5 CORNER BARS AT ALL BOND BEAM CORNERS TO LAP A MINIMUM OF 48 BAR DIAMETERS (U.N.O.).
12. PROVIDE ADJUSTABLE MASONRY ANCHORS TO STEEL BEAMS AND COLUMNS WHICH ARE EMBEDDED IN MASONRY AT 2'-8" O.C. MAXIMUM.
13. ALL CMU GROUT SHALL HAVE A 28-DAY COMPRESSIVE STRENGTH OF 3000 PSI.
14. PROVIDE CRACK CONTROL JOINTS AT ALL WALL RETURNS AND JAMBS OF OPENINGS AND AT A MAXIMUM SPACING OF 25 FEET ON CENTER. JOINTS SHALL OCCUR AT THE SAME LOCATIONS FOR BRICK VENEER AND CMU.
15. VERTICAL REINFORCEMENT SHALL BE HELD IN POSITION AT TOP AND BOTTOM AND AT INTERVALS NOT EXCEEDING 192 DIAMETERS OF THE REINFORCEMENT OR 10 FEET.
16. ALL CELLS CONTAINING REINFORCEMENT SHALL BE FILLED SOLIDLY WITH GROUT. ALL GROUT SHALL BE CONSOLIDATED AT TIME OF POURING BY PUDDLING OR VIBRATING AND THEN RECONSOLIDATED AGAIN BY PUDDLING LATER, BEFORE PLASTICITY IS LOST.
17. WHEN THE GROUTING IS STOPPED FOR ONE HOUR OR LONGER, HORIZONTAL CONSTRUCTION JOINTS SHALL BE FORMED BY STOPPING THE POUR OF GROUT NOT LESS THAN 1/2 INCH BELOW THE TOP OF THE UPPERMOST UNIT GROUTED.
18. ALL REINFORCED HOLLOW UNIT MASONRY SHALL BE BUILT TO PRESERVE THE UNOBSTRUCTED VERTICAL CONTINUITY OF THE CELLS TO BE FILLED. WALLS AND CROSS WEBS FORMING SUCH CELLS TO BE FILLED SHALL BE FULL-BEDDED IN MORTAR TO PREVENT LEAKAGE OF GROUT.
19. VERTICAL CELLS TO BE FILLED SHALL HAVE VERTICAL ALIGNMENT SUFFICIENT TO MAINTAIN A CLEAR, UNOBSTRUCTED, CONTINUOUS VERTICAL CELL MEASURING NOT LESS THAN 3" AND HAVING A CLEAR AREA OF 10 SQUARE INCHES.
20. WHERE BOND BEAMS ARE INTERRUPTED BY STRUCTURAL STEEL COLUMNS OR BEAMS, BOND BEAM REINFORCING SHALL BE WELDED TO THE COLUMN TO PROVIDE CONTINUITY OF THE BOND BEAM.

COLD-FORMED METAL

1. ALL STRUCTURAL MEMBERS SHALL BE DESIGNED IN ACCORDANCE WITH (AISI) "SPECIFICATION FOR THE DESIGN OF COLD-FORMED STEEL STRUCTURAL MEMBERS," LATEST EDITION.
2. ALL FRAMING MEMBERS SHALL BE FORMED FROM CORROSION-RESISTANT STEEL, CORRESPONDING TO THE REQUIREMENTS OF ASTM A653, WITH A MINIMUM YIELD STRENGTH OF 33 KSI FOR SJ-STYLE STUDS, 33 KSI FOR CR RUNNERS.
3. PRIOR TO FABRICATION OF FRAMING, THE CONTRACTOR SHALL SUBMIT FABRICATION AND ERECTION DRAWINGS TO THE ARCHITECT OR ENGINEER FOR APPROVAL.
4. AXIALLY LOADED STUDS SHALL BE INSTALLED IN A MANNER THAT WILL ASSURE THAT THEIR ENDS ARE POSITIONED AGAINST THE INSIDE OF RUNNER WEB PRIOR TO FASTENING.
5. FASTENING OF COMPONENTS SHALL BE WITH SELF-DRILLING SCREWS. SCREWS SHALL BE OF SUFFICIENT SIZE TO ENSURE THE STRENGTH OF THE CONNECTION. WIRE TYING OF COMPONENTS SHALL NOT BE PERMITTED.
6. RUNNERS SHALL BE SECURELY ANCHORED TO THE SUPPORTING STRUCTURE.
7. TEMPORARY BRACING, WHERE REQUIRED, SHALL BE PROVIDED UNTIL ERECTION IS COMPLETED.
8. SPLICES IN STUDS SHALL NOT BE PERMITTED UNLESS DESIGNED BY A PROFESSIONAL ENGINEER AND SUBMITTED FOR REVIEW.
9. ALL DESIGN AND SHOP DRAWINGS SHALL BE PREPARED UNDER THE SUPERVISION OF A REGISTERED PROFESSIONAL ENGINEER AND SHALL BEAR THE ENGINEER'S SEAL FOR FLORIDA.
10. STITCH WELD MULTIPLE LIGHT GAUGE STUDS TOGETHER USING ONE INCH LONG FLARE BEVEL GROOVE WELDS SPACED AT 12" O.C. MINIMUM AT EACH FLANGE.

STEEL JOISTS

1. JOISTS SHALL COMPLY WITH THE REQUIREMENTS OF THE STEEL JOIST INSTITUTE (SJI). STANDARD SPECIFICATION FOR OPEN WEB STEEL JOISTS, K-SERIES AND LH SERIES. JOISTS SHOWN ON PLAN HAVE BEEN SIZED FOR DEAD, LIVE, AND SNOW, INCLUDING DRIFTS DUE TO WALLS ONLY. MANUFACTURER IS TO DESIGN AND PROVIDE "SP" JOISTS WHERE REQUIRED TO SUPPORT CONCENTRATED LOADS. GENERAL CONTRACTOR IS TO COORDINATE WITH MANUFACTURER REGARDING LAYOUT OF ANY SUPPORTING SYSTEMS, TO VERIFY ALL MECHANICAL LOADS AND PROVIDE FINAL UNIT DIMENSIONS TO JOIST MANUFACTURER.
2. STEEL JOIST BRIDGING IS TO BE INSTALLED PER STEEL JOIST INSTITUTE (SJI) STANDARD SPECIFICATION. DIAGONAL BRIDGING IS TO BE USED WHERE BRIDGING TERMINATES AT STRUCTURAL STEEL. ANY SINGLE PANEL POINT OF THE LOWER CHORD OF EXPOSED ROOF JOIST SHALL BE CAPABLE OF SAFELY CARRYING A MINIMUM SUSPENDED CONCENTRATED LOAD OF 200 LB.
3. ALL STEEL JOISTS ARE TO BE WELDED TO SUPPORT SURFACE USING (2) 1/8" X 2" LONG WELDS FOR K-SERIES JOISTS AND (2) 1/4" X 2" LONG WELDS FOR LH-SERIES JOISTS UNLESS NOTED OTHERWISE. INCREASE WELD LENGTHS BY 1" WHERE WIND UPLIFT IS PRESENT ON ROOF JOISTS. JOISTS BEARING ON MASONRY ARE TO BE WELDED TO EMBEDDED BEARING PLATE. REFER TO TYPICAL DETAILS AND MASONRY BEARING PLATE SCHEDULE FOR FURTHER INFORMATION.
4. JOIST MANUFACTURER SHALL DESIGN ROOF JOISTS FOR A MINIMUM NET UPLIFT OF 10 PSF UNLESS OTHERWISE NOTED.

METAL DECK

1. CONTRACTORS SHALL PROVIDE MATERIALS, DESIGN AND INSTALLATION OF DECK FOR THE REQUIREMENTS OF STEEL DECK INSTITUTE'S "DESIGN MANUAL FOR COMPOSITE DECKS, FORM DECKS, AND ROOF DECKS." DECK PROPERTIES SHALL BE COMPUTED USING THE LATEST EDITION OF AISI SPECIFICATION FOR THE "DESIGN OF COLD-FORMED STEEL STRUCTURAL MEMBERS."
2. METAL ROOF DECKING SHALL BE WIDE RIB, TYPE N, GALVANIZED STEEL, CONFORMING TO ASTM A653 GRADE A, B, C, D, E OR F WITH MINIMUM YIELD STRESS = 33 KSI. GALVANIZING SHALL CONFORM TO ASTM A653 COATING CLASS G90.
3. STEEL COMPOSITE DECK SHALL CONFORM TO ASTM A653 STRUCTURAL QUALITY WITH A MINIMUM YIELD STRESS = 33 KSI. DECK SHALL BE GALVANIZED IN ACCORDANCE WITH ASTM A924 AND M 4653. SIXTEEN GAUGE WELDING WASHERS SHALL BE USED AT ALL WELDED CONNECTIONS.
4. ALL DECKING SHALL BE WELDED TO STRUCTURAL STEEL MEMBERS WITH 5/8" PUDDLE WELDS AT 12" O.C. SIDE LAPS FOR METAL DECK DIAPHRAGM SHALL BE #10 TEK SCREWS AT 3'-0" O.C. (U.N.O.)
5. PROVIDE WELDED WIRE FABRIC IN ALL CONCRETE FILL ON METAL DECK - WWF 6 X 6 - W1.4 X W1.4 (U.N.O). CONDUIT SHALL NOT BE EMBEDDED IN CONCRETE FILL ON METAL DECK. SEE ARCHITECTURAL AND ELECTRICAL DRAWINGS FOR LOCATIONS FO EMBEDDED BOXES.
6. STEEL DECK SHALL BE INSTALLED CONTINUOUS MORE THAN 3 SPANS MINIMUM (U.N.O.) AND SHALL BEAR AT LEAST 2.5" ON STEEL AT STEEL END SUPPORTS AND 5" ON STEEL AT STEEL INTERIOR SUPPORTS.
7. DECKING CONTRACTOR SHALL FURNISH AND INSTALL CONTINUOUS CLOSURES, RIDGE AND VALLEY PLATES AND POUR STOPS AT DECK ENDS, EDGES, CHANGE IN DECK DIRECTION AND OPENINGS WHERE NO STEEL ANGLE IS SPECIFIED.
8. THE CONTRACTOR SHALL PROVIDE SUPPLEMENTAL FRAMING (L4X3½X5/16, HSS2½X2½X¼) AS NECESSARY FOR THE SUPPORT OF METAL DECK WHERE NOT SHOWN ON DRAWINGS, UNLESS OTHERWISE INDICATED.
9. CONTRACTOR SHALL INCLUDE FOR ALL ADDITIONAL CONCRETE, WHICH MAY BE REQUIRED AS A RESULT OF DEFLECTION OF THE FLOOR BEAMS AND DECK DURING PLACEMENT OF CONCRETE.
10. SUPPORTS FOR DECK OPENINGS SHALL BE FABRICATED SO THAT THE DECK RUNS CONTINUOUSLY OVER THE OPENINGS. DECK SHALL BE CUT FROM THE OPENING IMMEDIATELY PRIOR TO PLACING THE EQUIPMENT OVER THE OPENING OR WALLS AROUND THE SHAFT.

ROOF ZONES FOR COMPONENTS AND CLADDING WIND PRESSURES

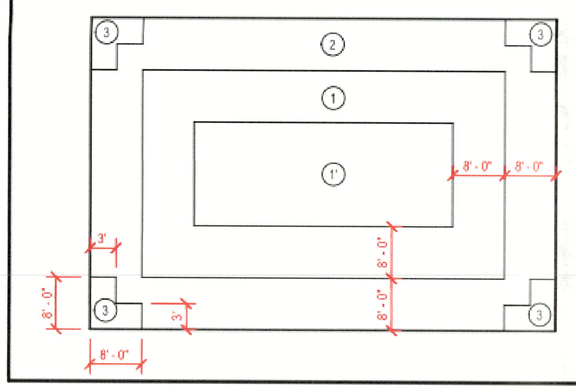

WALL ZONES FOR COMPONENTS AND CLADDING WIND PRESSURES

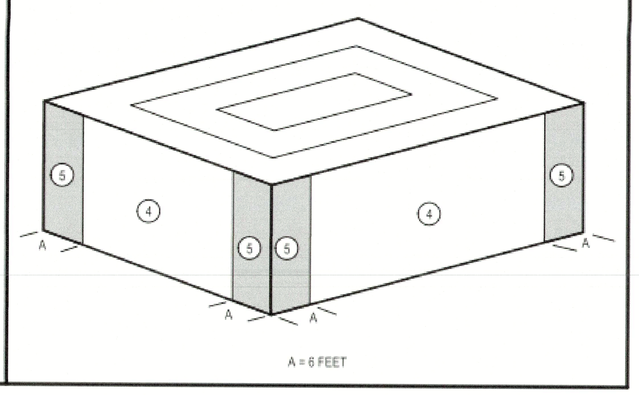

ASD WIND LOAD SCHEDULE

COMPONENT AND CLADDING LOADS

ZONE	ZONE DESCRIPTION	TRIBUTARY AREA (SQ. FT.)	POSITIVE (+ PSF)	NEGATIVE (- PSF)
1,1'	ROOF - INTERIOR ZONE	LESS THAN 20	17.4	68.3
		20 - 100	17.4	63.7
		GREATER THAN 100	17.4	53.3
2	ROOF - EDGE ZONE	LESS THAN 20	17.4	90.1
		20 - 100	17.4	84.3
		GREATER THAN 100	17.4	70.8
3	ROOF, CORNER ZONES	LESS THAN 20	17.4	123.7
		20 - 100	17.4	111.2
		GREATER THAN 100	17.4	84.3
4	WALL, INTERIOR ZONE	LESS THAN 20	42.9	46.5
		20 - 100	40.9	40.1
		GREATER THAN 100	36.5	43.1
5	WALL, CORNER ZONE	LESS THAN 20	42.9	57.4
		20 - 100	40.9	53.5
		GREATER THAN 100	36.5	44.6

RECEIVED
AUG 28 2024
TOWN OF LONGBOAT KEY
Planning, Zoning & Building

THE STRUCTURAL SYSTEMS OF THE BUILDING IS DESIGNED, CONNECTED AND ANCHORED TO RESIST FLOTATION, COLLAPSE OR PERMANENT LATERAL MOVEMENT DUE TO STRUCTURAL LOADS AND STRESSES FROM FLOODING EQUAL TO THE DESIGN FLOOD ELEVATION.

YOUNG & HEDRICK STRUCTURAL ENGINEERING
6771 Professional Parkway West
Suite #201 - Lakewood Ranch, FL 34240
www.YHEngineers.com Tel (941) 306-1225
FBPE# 34899

© by YOUNG & HEDRICK ENGINEERING, LLC. ALL RIGHTS RESERVED

STEPHEN E HEDRICK LICENSE No. 81830 STATE OF FLORIDA PROFESSIONAL ENGINEER

JODY D. YOUNG JR. PE FL/PE# 70781

A Custom Home for:

OUTPARCEL COMMERCIAL BUILDING ONE

3120 - 3150 GULF OF MEXICO DRIVE LONGBOAT KEY, FL

STRUCTURAL GENERAL NOTES

REVISIONS	
BY	DATE
-	-
-	-
-	-
-	-
-	-
-	-
NPM	10.17.2022

S4.0

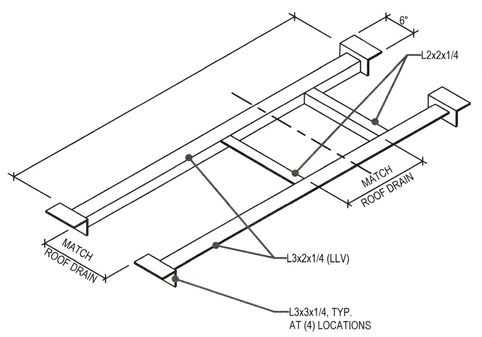

1 TYP. ROOF DRAIN DETAIL
Scale: NTS

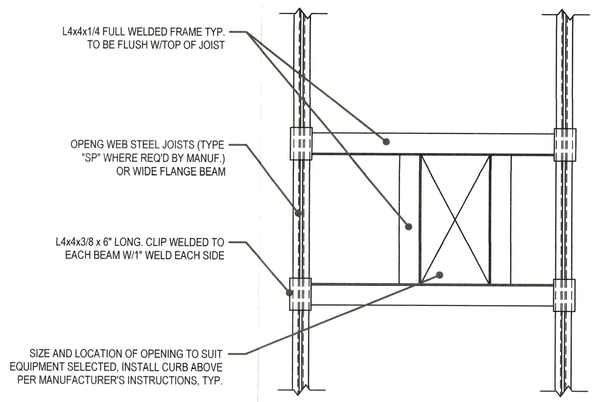

NOTES:
1. INSTALL SINGLE ANGLES UNDER UNIT CURBING AND ABOVE EXHAUST HOOD AS PER THE MANUFACTURER'S RECOMMENDATIONS.

2 TYP. OPENING THROUGH METAL DECK
Scale: NTS

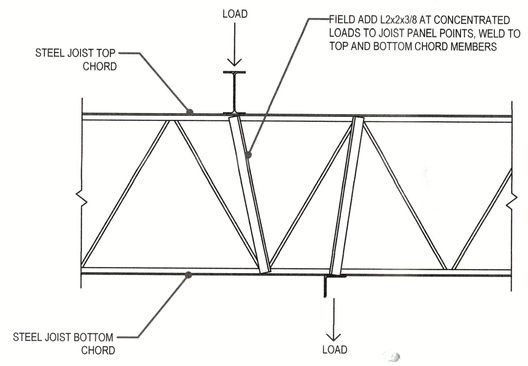

NOTES:
1. CONDITION APPLIES WHERE CONCENTRATED LOAD IS GREATER THAN 4" FROM PANEL POINT.
2. AT MECHANICAL UNIT LOCATIONS AND LOCATIONS WHERE CONCENTRATED LOADS ARE SHOWN ON NEW CONSTRUCTION, TYPE "SP" JOISTS ARE TO BE PROVIDED INSTEAD OF MODIFICATION SHOWN ABOVE.

3 TYP. CONCENTRATED LOAD
Scale: NTS

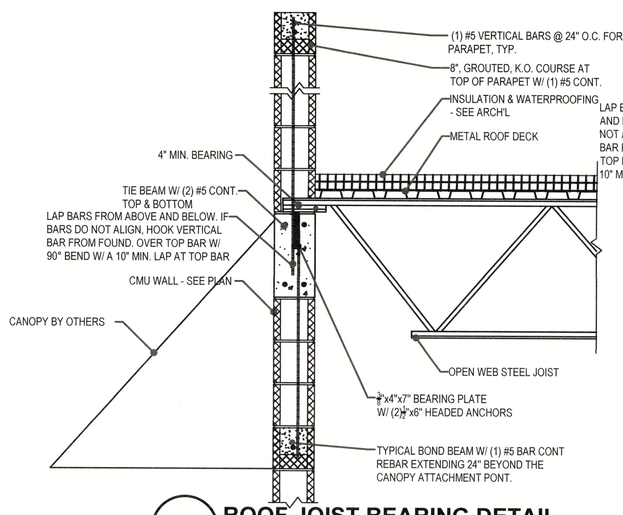

4 ROOF JOIST BEARING DETAIL
Scale: NTS

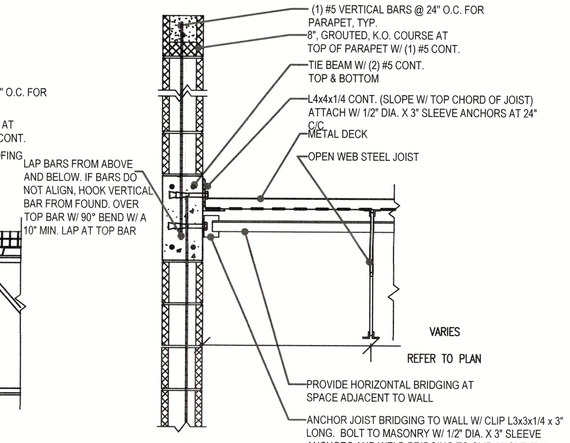

NOTES:
TYPICAL WHERE WALL EXTENDS PAST DECK AND JOIST MORE THAN 6" FROM WALL. PROVIDE ON BOTH SIDES OF WALL WHERE WALL PENETRATES DECK.

5 TYPICAL EDGE OF DECK DETAIL
Scale: NTS

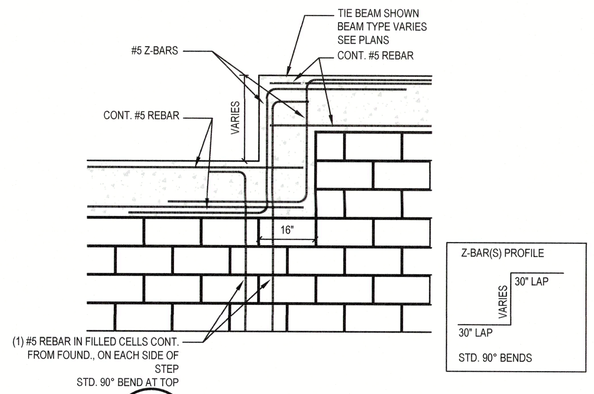

6 SECTION
NTS

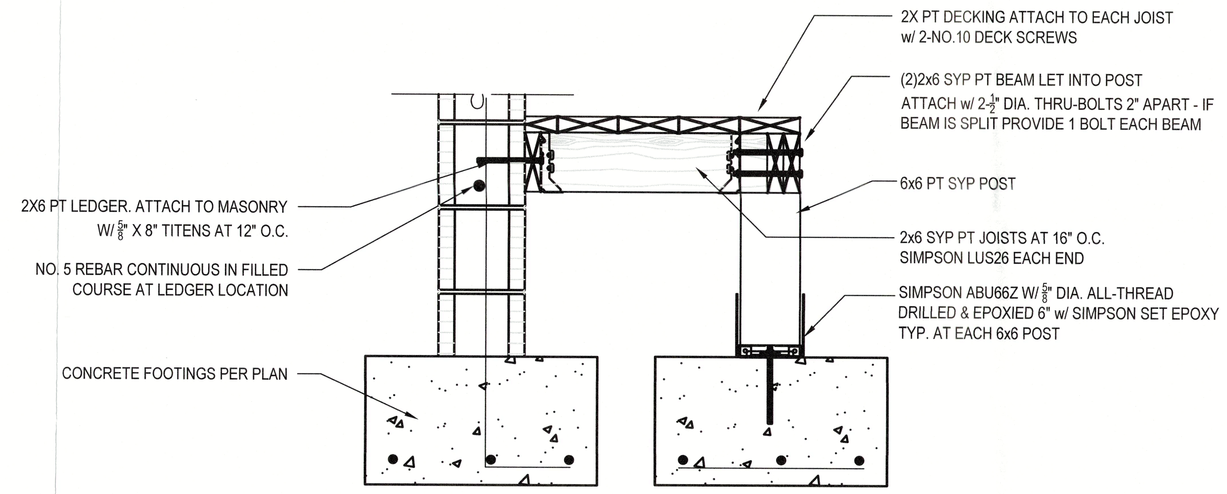

7 SECTION
NTS

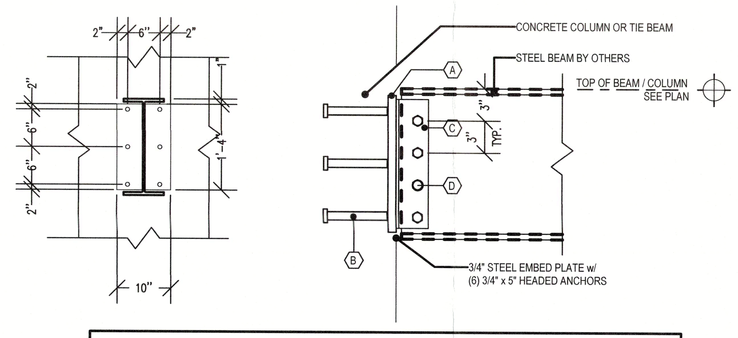

EMBED PLATE SCHEDULE

MARK	Ⓐ	Ⓑ	Ⓒ	Ⓓ	Ⓔ	Ⓕ
EB-1	½" x 10" x 16" STEEL PLATE	(6) ½" Ø A36 HEADED w/ 5" EMBED	4x4x3/8 DOUBLE ANGLE	3/4" Ø A325-N	-	-

PLATE AND BOLTS ARE CONCEPTUAL CONNECTIONS ONLY. ALL STEEL TO STEEL CONNECTIONS SHALL BE DESIGNED BY STRUCTURAL STEEL SPECIALTY ENGINEER AND SUBMITTED WITH SHOP DRAWINGS AND CALCULATIONS.

8 BEAM TO CONCRETE SUPPORT DETAIL
Scale: NTS

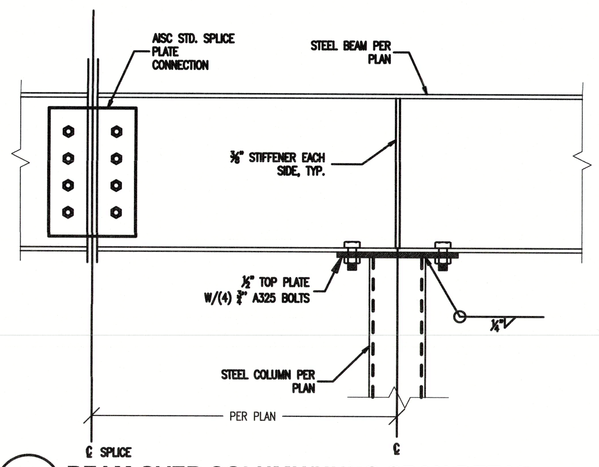

9 BEAM OVER COLUMN/HUNG SPAN DETAIL
Scale: NTS

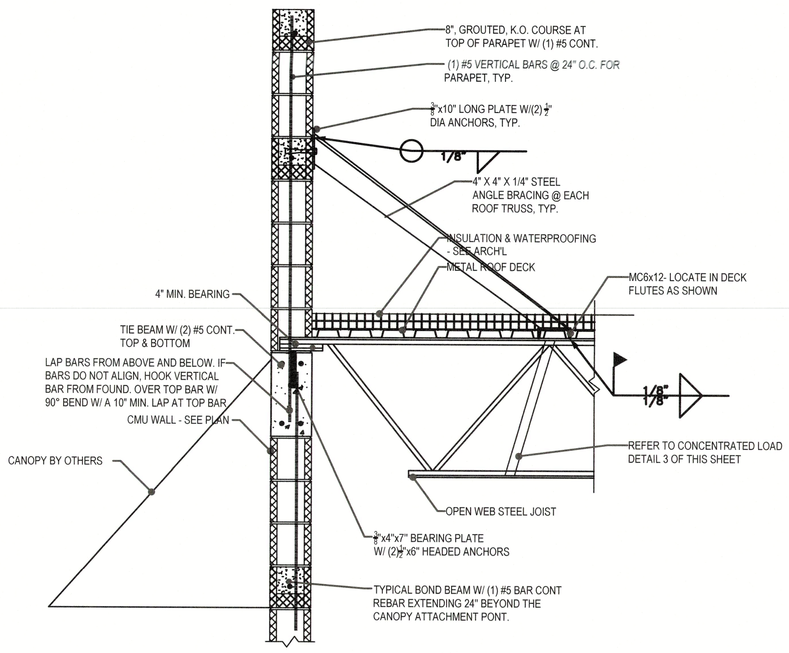

10 TYP. PARAPET REINFORCEMENT DETAIL
Scale: NTS

© by YOUNG & HEDRICK ENGINEERING, LLC. ALL RIGHTS RESERVED

YOUNG & HEDRICK STRUCTURAL ENGINEERING
6771 Professional Parkway West
Suite #201 · Lakewood Ranch, FL 34240
www.YHEngineers.com · Tel (941)306-1225
FBPE# 34899

STEPHEN E. HEDRICK LICENSE No. 81830 STATE OF FLORIDA PROFESSIONAL ENGINEER

JODY D. YOUNG JR. PE FLPE# 70181

A Custom Home for:

OUTPARCEL COMMERCIAL BUILDING ONE

3120 - 3150 GULF OF MEXICO DRIVE LONGBOAT KEY, FL

TYPICAL STRUCTURAL DETAILS

NTS

REVISIONS	
BY	DATE
-	-
-	-
-	-
-	-
-	-
-	-
NPM	10.17.2022

S4.1

RECEIVED
AUG 28 2024
TOWN OF LONGBOAT KEY
Planning, Zoning & Building

BLDG PERMIT PLANS
FILE
Copy of Record

NPDES

1. GENERAL

A. WORK REQUIRED IN THIS SECTION SHALL BE DONE IN ACCORDANCE WITH THE LATEST EDITION OF THE NATIONAL ELECTRICAL CODE (NEC), LOCAL, AND STATE CODES. SEE CODE TABLE – THIS SHEET.

2. SCOPE

A. WORK UNDER THIS DIVISION SHALL INCLUDE THE FURNISHING OF ALL LABOR AND THE FURNISHING OF ALL CONDUCTORS, CONDUITS, WIRING, LIGHTING FIXTURES, SAFETY SWITCHES, AND ALL OTHER APPARATUS AND ACCESSORIES INDICATED, SPECIFIED OR REQUIRED FOR A COMPLETE POWER AND LIGHTING SYSTEM, INCLUDING ELECTRICAL WORK REQUIRED IN OTHER DIVISIONS AND PROVISIONS FOR TELEPHONES AS INDICATED.

B. "PROVIDE" IN ELECTRICAL NOTES SHALL MEAN "PROVIDE AND INSTALL" UNLESS SPECIFICALLY NOTED OTHERWISE.

3. GENERAL REQUIREMENTS

A. THIS CONTRACTOR, PRIOR TO SUBMITTING HIS BID, WILL BE HELD TO HAVE VISITED THE SITE OF THE WORK, TO HAVE EXAMINED THE DRAWINGS, SPECIFICATIONS, AND OTHER DOCUMENTS RELATIVE TO THE ENTIRE WORK; TO HAVE FAMILIARIZED HIMSELF WITH THE EXISTING CONDITIONS AND THE MANNER IN WHICH THEY WILL AFFECT HIS WORK; TO HAVE FAMILIARIZED HIMSELF WITH THE GENERAL TYPE OF CONSTRUCTION AND ITS RELATION TO HIS WORK, AS WELL AS THE RELATION OF HIS WORK TO THAT OF ALL OTHER TRADES.

4. MATERIALS AND WORKMANSHIP

A. ALL MATERIALS SHALL BE NEW AND SHALL CONFORM TO THE STANDARDS OF I.E.E.E., AND NEMA, WHERE SUCH STANDARD HAS BEEN ESTABLISHED FOR THE PARTICULAR TYPE OF MATERIAL IN QUESTION. ALL ELECTRICAL EQUIPMENT INSTALLED SHALL BE LISTED BY A NATIONALLY RECOGNIZED TESTING LABORATORY (NRTL) PER NEC ARTICLE 110.3.

B. ALL WORK SHALL BE DONE IN A WORKMANLIKE MANNER AND SHALL PRESENT A NEAT AND MECHANICAL APPEARANCE WHEN COMPLETED.

C. ELECTRICAL CONTRACTOR SHALL BE RESPONSIBLE FOR TEMPORARY POWER AND TEMPORARY LIGHTING DURING CONSTRUCTION. TEMPORARY POWER SHALL PROVIDE ADEQUATE POWER FOR NORMAL CONSTRUCTION USE. TEMPORARY LIGHTING SHALL PROVIDE ADEQUATE LIGHT SO THAT THE INDIVIDUAL TRADES WORK CAN BE COMPLETED SAFELY.

5. CODES, PERMITS, AND INSPECTIONS

A. THE INSTALLATION SHALL COMPLY WITH ALL LAWS IN EFFECT APPLYING TO ELECTRICAL INSTALLATIONS, THE LATEST EDITION OF THE NATIONAL ELECTRICAL CODE, THE NATIONAL ELECTRICAL SAFETY CODE, AND ALL LOCAL CODES.

B. ANY PERMITS REQUIRED SHALL BE OBTAINED AND AFTER COMPLETION OF THE WORK, THE OWNER SHALL BE FURNISHED A CERTIFICATE OF FINAL INSPECTION AND APPROVAL FROM THE INSPECTION AUTHORITIES.

C. ALL PERMITS FOR INSTALLATION, INSPECTION, CONNECTIONS, ETC., SHALL BE TAKEN OUT AND PAID FOR BY THE ELECTRICAL CONTRACTOR AS A PART OF THE WORK UNDER THIS DIVISION OF THE SPECIFICATIONS.

6. DRAWINGS AND SCHEDULES

A. DRAWINGS: THE ELECTRICAL DRAWINGS ARE PARTLY DIAGRAMMATIC AND INDICATE THE GENERAL ARRANGEMENT AND EXTENT OF THE ELECTRICAL WORK, BUT EXACT LOCATION AND ARRANGEMENT OF PARTS SHALL BE DETERMINED AS THE WORK PROGRESSES TO CONFORM IN THE BEST POSSIBLE MANNER, WITH THE SURROUNDINGS.

B. THE DRAWINGS ARE DESIGNED AS PER THE LATEST EDITION OF THE NATIONAL ELECTRICAL CODE. IT IS THE CONTRACTOR'S RESPONSIBILITY TO ADVISE THE ARCHITECT OF ANY CONFLICTS BETWEEN THE NATIONAL ELECTRICAL CODE AND LOCAL CODES. FAILURE TO DO SO DOES NOT RELIEVE THE CONTRACTOR'S OBLIGATION UNDER THIS CONTRACT AND WORK REQUIRED TO COMPLY WITH THE APPLICABLE CODES SHALL BE INSTALLED AT NO ADDITIONAL COST.

7. DISCREPANCIES

A. IN CASE OF ANY DIFFERENCE BETWEEN THE DRAWINGS AND SPECIFICATIONS, OR WHERE THE DRAWINGS AND SPECIFICATIONS ARE NOT CLEAR OR DEFINITE, THE SUBJECT SHALL BE REFERRED TO THE PROJECT ENGINEER FOR DECISION AND WRITTEN INSTRUCTIONS.

8. CONDUITS

A. RIGID GALVANIZED STEEL CONDUIT SHALL BE USED FOR ALL EXPOSED WIRING LOCATED LESS THAN 8 FEET ABOVE THE FINISHED FLOOR LEVEL, WHERE SUBJECT TO SEVERE MECHANICAL INJURY AND ALL WIRING EXPOSED TO THE ELEMENTS.

B. ALL EXPOSED CONDUIT SHALL BE RUN PARALLEL WITH WALLS OR CEILINGS.

C. ALL CONDUITS CUT SHALL BE REAMED TO REMOVE ANY SHARP EDGES THAT MAY DAMAGE THE WIRES TO BE PULLED IN.

D. BRANCH CIRCUIT WIRING RUN CONCEALED IN WALLS AND CEILINGS MAY BE INSTALLED IN UNDERWRITER'S APPROVED GALVANIZED THIN WALL CONDUIT WITH COMPRESSION OR SET-SCREW TYPE FITTINGS. SPRING OR CRIMP TYPE OR NON-FERROUS FITTINGS WILL NOT BE APPROVED.

E. ALL WIRING UNDERGROUND OR IN THE SLAB SHALL BE RUN IN RIGID THICK WALL GALVANIZED STEEL CONDUIT. P.V.C. SCHEDULE 40 CONDUIT SHALL BE PERMITTED FOR UNDERGROUND USE ONLY. USE THICK WALL 90° STEEL ELBOWS TO PIERCE SLAB.

F. CONDUIT CONNECTIONS FROM OUTLET BOXES, JUNCTION BOXES, CONDUIT, SWITCH BOXES, OR MOTOR CONTROLLER TO ROTATING OR VIBRATING MACHINERY OR EQUIPMENT SHALL BE MADE WITH FLEXIBLE METALLIC CONDUIT WHICH SHALL BE AS SHORT AS POSSIBLE WITH A MAXIMUM LENGTH OF THIRTY-SIX INCHES. FLEXIBLE CONDUIT EXPOSED TO THE WEATHER SHALL BE WEATHER-PROOF TYPE.

G. CONDUIT CONNECTIONS FROM OUTLET BOXES TO RECESSED LIGHTING FIXTURES SHALL BE MADE WITH 3/8" FLEXIBLE CONDUIT WHICH SHALL HAVE A MAXIMUM LENGTH OF 72 INCHES, UNLESS OTHERWISE NOTED.

H. PACK ALL SLEEVES FOR CONDUITS PASSING THROUGH FIRE RATED WALLS AND FLOOR SLABS WITH FIRE RESISTANT MATERIALS. ALL PENETRATIONS SHALL BE U.L. RATED.

I. CONDUITS SHALL BE A MINIMUM 3/4" CONDUIT UNLESS NOTED OTHERWISE ON PLANS. ALL EMPTY CONDUITS SHALL BE PROVIDED WITH NYLON PULL-WIRES.

J. A GREEN INSULATED COPPER GROUND CONDUCTOR SHALL BE INSTALLED IN ALL RACEWAYS.

9. WIRE AND CABLE

A. ALL CONDUCTORS SHALL BE COPPER WITH THHN INSULATION (THWN INSULATION FOR WEATHER-PROOF APPLICATIONS).

B. ALL CONDUCTORS #10 AND SMALLER SHALL BE SOLID COPPER, AND ALL CONDUCTORS #8 AND LARGER SHALL BE COPPER USING BOLTED LUGS AT TERMINALS. ALL WIRING FOR 120-VOLT, 20-AMP CIRCUITS EXCEEDING 80 FEET IN LENGTH SHALL BE #10 AWG ENTIRE CIRCUIT MINIMUM. MINIMUM WIRE SIZE SHALL BE #12 AWG UNLESS NOTED OTHERWISE.

10. OUTLET BOXES

A. CEILING OUTLET BOXES SHALL BE FOUR INCH OCTAGON TYPE OF GALVANIZED STEEL WITH A MINIMUM DEPTH OF 1 1/2". OUTLET BOXES FOR SWITCHES OR WALL RECEPTACLES SHALL BE 4" SQUARE, OF GALVANIZED STEEL, WITH A MINIMUM DEPTH OF 1 1/2". TELEPHONE OUTLET BOXES SHALL BE 4 11/16" SQUARE. WALL SWITCH OUTLETS SHALL BE MOUNTED 48" ABOVE THE FLOOR; WALL RECEPTACLES SHALL GENERALLY BE MOUNTED 18" ABOVE THE FLOOR UNLESS NOTED OTHERWISE ON DRAWINGS. OUTLET BOXES FOR EXPOSED WALL MOUNTING SHALL BE CAST METAL TYPE. OUTLET BOXES FOR CEILING FANS SHALL BE LISTED FOR SUCH USE.

11. WIRING DEVICES

A. SWITCHES: 20-AMP, 120/277 VOLT RATING, SPECIFICATION GRADE, OFFICE-WHITE IN COLOR. SWITCHES SHALL BE FLUSH, QUIET TOGGLE TYPE (HUBBELL #1221 OR EQUAL).

B. WALL RECEPTACLES: DUPLEX RECEPTACLES SHALL BE FLUSH TYPE, 15 AMPERES, 125 VOLTS RATING, WITH PARALLEL SLOTS AND DOUBLE SIDE CONTACTS. RECEPTACLES SHALL BE GROUNDING TYPE "OFFICE-WHITE" IN COLOR, SPECIFICATION GRADE (HUBBELL #5262 OR EQUAL).

C. WALL PLATES SHALL BE "OFFICE-WHITE" BAKELITE IN OFFICE AREAS, AND GALVANIZED STEEL IN SHOP AREAS.

12. SAFETY SWITCHES

A. SAFETY SWITCHES SHALL BE HEAVY OR GENERAL DUTY, FUSIBLE TYPE OR NON-FUSIBLE TYPE AS INDICATED ON DRAWINGS (SQUARE D CO. OR EQUAL).

13. PANELBOARDS

A. PANELBOARDS SHALL BE OF THE DEAD-FRONT TYPE INCORPORATING SWITCHING AND PROTECTIVE DEVICES OF THE NUMBER, RATING AND TYPE SPECIFIED HERE IN OR SHOWN ON THE DRAWINGS. PANELBOARDS SHALL HAVE GENERAL PURPOSE ENCLOSURES AND SHALL BE SUITABLE FOR FLUSH OR SURFACE MOUNTING AS INDICATED. ALL PANELBOARDS SHALL BE RATED FOR THE INTENDED VOLTAGE AND SHALL BE IN ACCORDANCE WITH THE UNDERWRITERS' LABORATORIES, INC. "STANDARD FOR PANELBOARDS" AND "STANDARD FOR CABINETS AND BOXES" AND SHALL BE SO LABELED WHERE PROCEDURES EXIST. PANELBOARDS SHALL ALSO COMPLY WITH NEMA STANDARD FOR PANELBOARDS AND THE NATIONAL ELECTRICAL CODE. THE BRANCH CIRCUIT BREAKER ARRANGEMENT IN EACH PANEL SHALL BE AS INDICATED IN THE PANEL SCHEDULES. PANELS SHALL BE AS MANUFACTURED BY SQUARE "D", CUTLER-HAMMER, OR APPROVED EQUAL.

B. THE POWER COMPANY SHALL BE CONTACTED BY THE CONTRACTOR WITHIN 10 DAYS OF THE AWARD OF THE CONTRACT TO VERIFY THE ACTUAL AVAILABLE SHORT CIRCUIT FAULT CURRENT AT THE TRANSFORMER SECONDARY BUSHINGS. THE CONTRACTOR SHALL PROVIDE ELECTRICAL DISTRIBUTION AND UTILIZATION EQUIPMENT AND PANELBOARDS WHICH HAVE A.I.C. WITHSTAND RATINGS GREATER THAN THE AVAILABLE FAULT CURRENT.

C. ALL CIRCUIT BREAKERS SHALL BE "FULL SIZE". NO TANDEM, PIGGY-BACK, TWIN OR HALF-SIZE BREAKERS WILL BE ACCEPTED. BREAKER MUST BE APPROVED PRIOR TO INSTALLATION.

D. COORDINATE THE REQUIRED SIZE OF ALL CIRCUIT BREAKERS FEEDING EQUIPMENT (MOTORS, HVAC, KITCHEN EQUIPMENT, SPECIAL PURPOSE OUTLETS, ELEVATORS, OWNER-FURNISHED EQUIPMENT, ETC.) WITH APPROVED EQUIPMENT SHOP DRAWINGS AND OWNER REPRESENTATIVES PRIOR TO ORDERING PANELBOARDS. BREAKERS SHALL BE SIZED PER THE N.E.C., THE EQUIPMENT NAME PLATE AND MANUFACTURER'S RECOMMENDATIONS. SERIES RATING OF CIRCUIT BREAKERS MUST BE APPROVED BY ENGINEER, AND MUST COMPLY WITH ALL THE REQUIREMENTS OF NEC 110.22 AND 240.86.

E. UPON COMPLETION OF INSTALLATION, INSPECT INTERIOR AND EXTERIOR OF PANELBOARDS. PROTECT INTERIORS FROM PAINT SPLATTER DURING CONSTRUCTION AND REMOVE PAINT SPLATTERS AND OTHER SPOTS, DIRT, AND DEBRIS. TOUCH UP SCRATCHES AND MARS OF FINISH TO MATCH ORIGINAL FINISH.

14. NOT USED.

15. FUSES

A. FUSES SHALL BE AS MANUFACTURED BY BUSSMAN, GOULD-SHAWMUT, OR LITTLEFUSE AND SHALL BE DUAL-ELEMENT, TIME DELAY OR CURRENT-LIMITING U.L. CLASS RK5 AS SPECIFIED ON THE DRAWINGS.

B. MAIN SWITCHES AND CIRCUITS EXCEEDING 600 AMPERES CAPACITY SHALL BE FUSED WITH BUSSMAN TYPE KRP-C HI-CAP CURRENT LIMITING FUSES U.L. CLASS L. THE EXACT TYPE SHALL BE AS RECOMMENDED BY THE MANUFACTURER CONSIDERING INTERRUPTING AND COORDINATION REQUIREMENTS.

16. MISCELLANEOUS EQUIPMENT WIRING

A. THE ELECTRICAL CONTRACTOR SHALL CONNECT ALL EQUIPMENT FURNISHED BY OTHERS AS INDICATED ON THE DRAWINGS.

17. TELEPHONE RACEWAYS

A. FURNISH AND INSTALL THE OUTLET AND RACEWAY SYSTEM FOR TELEPHONES AS INDICATED ON THE DRAWINGS. RACEWAYS SHALL BE OF THE SAME SPECIFICATIONS AS FOR POWER RACEWAYS AND SHALL BE PROVIDED WITH #12 GALVANIZED PULL-WIRE. NO TELEPHONE RACEWAY SHALL CONTAIN MORE THAN TWO 90° BENDS OR EQUIVALENT.

18. TESTING AND DRAWINGS

A. ALL WIRING AND EQUIPMENT FURNISHED AND INSTALLED BY THIS CONTRACTOR SHALL BE COMPLETELY TESTED AND LEFT IN PERFECT WORKING ORDER.

B. TYPEWRITTEN BRANCH CIRCUIT INDEXES SHALL BE INSTALLED IN ALL PANELS.

C. IDENTIFYING NAME PLATES WITH WHITE LETTERS ON A BLACK BACKGROUND SHALL BE INSTALLED ON ALL SAFETY SWITCHES.

D. CHANGES IN THE LOCATIONS OF CONDUITS, CONNECTIONS OR CIRCUITS AND ANY OTHER DATA DIFFERENT FROM THE CONTRACT DRAWINGS SHALL BE NOTED BY THE CONTRACTOR ON A SET OF PRINTS TO BE FURNISHED BY AND RETURNED TO THE PROJECT ENGINEER AFTER COMPLETION OF THE INSTALLATION. A COPY OF THESE AS-BUILT DOCUMENTS SHALL ALSO BE PROVIDED TO THE BUILDING OWNER.

E. CONTRACTOR SHALL PROVIDE TO THE BUILDING OWNER, AN OPERATING MANUAL FOR ALL ELECTRICAL EQUIPMENT AND A MAINTENANCE MANUAL FOR EACH PIECE OF EQUIPMENT REQUIRING MAINTENANCE. REQUIRED ROUTINE MAINTENANCE ACTIONS SHALL BE CLEARLY IDENTIFIED. FOR EACH PIECE OF EQUIPMENT REQUIRING MAINTENANCE, CONTRACTOR SHALL PROVIDE AT LEAST ONE NAME AND ADDRESS OF A QUALIFIED SERVICE AGENCY.

19. GUARANTEE

A. ALL ELECTRICAL WORK DONE UNDER THIS CONTRACT SHALL BE GUARANTEED FOR ONE YEAR BY THE ELECTRICAL CONTRACTOR, IN WRITING.

20. FINAL REVIEW

A. AT A TIME DESIGNATED BY THE ARCHITECT/ENGINEER, THE ENTIRE SYSTEM SHALL BE REVIEWED. THE CONTRACTOR SHALL BE PRESENT AT THIS REVIEW.

B. PRIOR NOTICE OF FIVE WORKING DAYS SHALL BE GIVEN FOR FINAL REVIEW. IF WORK IS NOT COMPLETED AT THE TIME FINAL REVIEW IS PERFORMED AND ADDITIONAL REVIEW(S) ARE REQUIRED. THE COST OF THE REVIEW AND ANY SUBSEQUENT REVIEW SHALL BE BORN BY THE CONTRACTOR.

END OF SECTION.

ELECTRICAL LEGEND

- RECESS MOUNTED LIGHT FIXTURE
- WALL MOUNTED LIGHT FIXTURE
- WALL MOUNTED UPLIGHT
- MOTOR
- LIGHTED EXIT SIGN
- L-30 "A" RECESSED FLUORESCENT FIXTURE (LETTER INDICATES FIXTURE TYPE - SEE SCHEDULE) (L-30 INDICATES PANEL AND CIRCUIT NUMBER)
- HOME RUN TO PANEL (ONE PHASE CONDUCTOR, ONE NEUTRAL CONDUCTOR ONE EQUIPMENT GROUND CONDUCTOR)
- HOME RUN TO PANEL (THREE PHASE CONDUCTORS, ONE NEUTRAL CONDUCTOR ONE EQUIPMENT GROUND CONDUCTOR)
- # POLES, DISCONNECT SIZE, 3R, 200, 150, FUSE SIZE, NEMA ENCLOSURE CLASS — ELECTRICAL SAFETY SWITCH (SQUARE D, G.E., SIEMENS)
- SIMPLEX RECEPTACLE 20-AMP, 125V (MOUNT AT 18" AFF U.N.O.)
- DUPLEX RECEPTACLE 20-AMP, 125V (MOUNT AT 18" AFF U.N.O.)
- QUADRAPLEX RECEPTACLE 20-AMP, 125V (MOUNT AT 18" AFF U.N.O.)
- GFI GRND. FAULT INT. DPLX. RECEP. 125V (MOUNT AT 18" AFF U.N.O.)
- DUPLEX RECEPTACLE 20-AMP, 125V (MOUNTED ABOVE COUNTER BACKSPLASH)
- WP GFI WEATHERPROOF/GFI DUPLEX RECEP. 125V (MOUNT AT 18" AFF U.N.O.)
- CLG CEILING RECEPTACLE 120V
- 250V RECEPTACLE(MOUNT AT 18" AFF U.N.O.)
- RFL RECESSED QUAD FLOOR RECEPTACLE
- $ SINGLE POLE SWITCH
- $3 THREE WAY SWITCH
- $4 FOUR WAY SWITCH
- $D DIMMER SWITCH
- $M MOTOR-RATED SWITCH (WITH OVERLOADS)
- J JUNCTION BOX
- V PHONE OUTLET (54" AFF U.N.O.)
- PHONE OUTLET (18" AFF U.N.O.)
- DATA OUTLET (18" AFF U.N.O.)
- TV CABLE TV OUTLET (18" AFF U.N.O.)
- WM AM WATT-METER/AMMETER DISPLAY (3Ø)

ABBREVIATIONS

CU.	COPPER	AFF	ABOVE FINISHED FLOOR
E.G.	EQUIPMENT GROUND	UNO	UNLESS NOTED OTHERWISE
AC	ABOVE COUNTER	GFI	GROUND FAULT CIRCUIT INTERRUPTER
NF	NON-FUSED	AIC	AMP INTERRUPTING CAPACITY
ABG	ABOVE GRADE	AFC	AVAILABLE FAULT CURRENT
LSI	LONG-TIME, SHORT-TIME, INSTANTANEOUS CAPABILITY	GFP	GROUND FAULT PROTECTION

CODES:

ALL CODES SHALL COMPLY WITH THE FLORIDA STATUES 69A-3.012 AND THE STATE FIRE MARSHAL'S RULE. THIS LIST IS NOT INCLUSIVE OF ALL CODES AND STANDARDS THAT MAY OR MAY NOT APPLY TO THIS PROJECT.

***FLORIDA BUILDING CODE: 7TH EDITION, 2020**
***FLORIDA EXISTING BUILDING CODE: 7TH EDITION, 2020**
*FLORIDA FIRE PREVENTION CODE, 7TH EDITION, 2020
*FLORIDA ENERGY CODE, 7TH EDITION, 2020

NATIONAL FIRE PROTECTION ASSOCIATION (NFPA):
*NFPA-70 (2017) NATIONAL ELECTRICAL CODE
*NFPA-72 (2013) NATIONAL FIRE ALARM CODE

ACCESSIBILITY CODE
*FLORIDA ACCESSIBILITY CODE: 7TH EDITION 2020

David D Patton JR
Digitally signed by: David D Patton JR
DN: CN = David D Patton JR C = US O = Florida
Date: 2024.08.12 07:58:39 -05'00'

DAVID D. PATTON JR., P.E., LLC
1515 LAUREL ST.
NOKOMIS, FLORIDA 34275
FL PE #52909
941-993-4607

REVISION SCHEDULE

DELTA NO.	DATE

PROJECT LOCATION:
BRISTA COMMONS, BUILDING TWO
3160 GULF OF MEXICO DRIVE
LONGBOAT KEY, FLORIDA

CLIENT INFORMATION:
MARK A. URSINI BRISTA HOMES
1656 MAIN STREET
SARASOTA, FLORIDA 34236
941-373-0500
LIC. #CB0059465

ENGRAVING APPLIES TO ALL DISCONNECTS ON PROJECT HVAC EQUIPMENT, PLUMBING EQUIPMENT, STARTERS, PUMPS, PANELS, TIME CLOCKS, FIRE ALARM, SECURITY, TELEPHONE AND TELEVISION PANELS

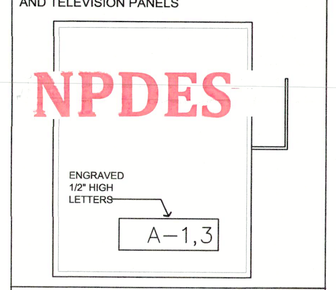

DISCONNECT ENGRAVING

PANEL BOARD DETAIL

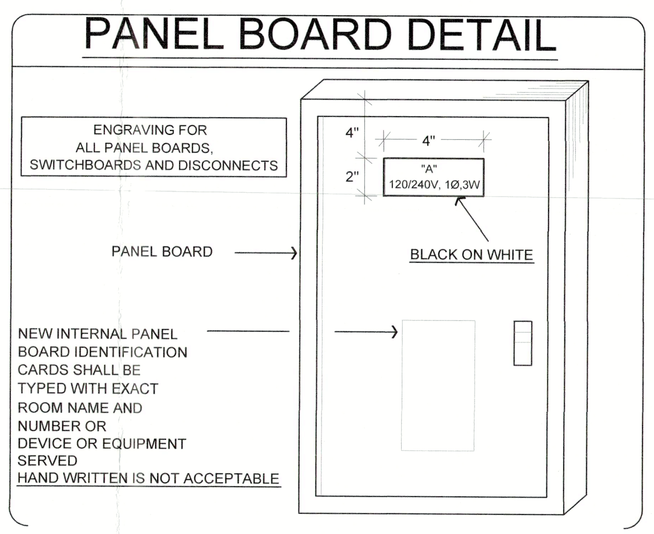

GROUNDING DETAIL

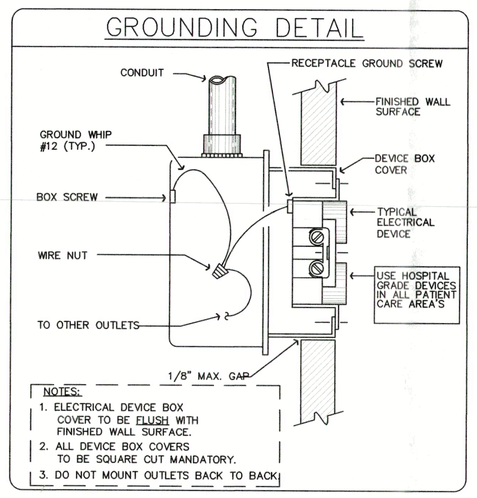

PLASTER RING DETAIL

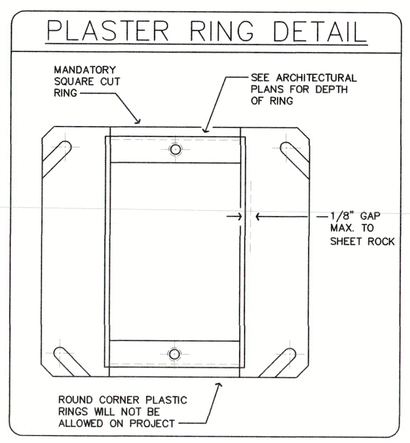

MECHANICAL, ELECTRICAL, AND PLUMBING REVIEWS WILL BE DEFERRED TO FIELD INSPECTORS

Permit # PB24-0986
REVIEWED FOR CODE COMPLIANCE
LONGBOAT KEY BUILDING DEPT.
AUG 28 2024
APPROVED
Reviewer: PE-E

BLDG PERMIT PLANS
FILE
Copy of Record

RECEIVED
AUG 28 2024
TOWN OF LONGBOAT KEY
Planning, Zoning & Building

NPDES

BRISTA HOMES
1656 Main St, Sarasota, FL 34236
941.373.0500 | BRISTAHOMES.COM
LIC. #CBC062465

PERMIT SET

SEAL

DATE 05/8/2024
SCALE AS NOTED
DRAWN DDP
JOB # 22-100
SHEET NO. E-0

BLDG PERMIT PLANS
FILE
Copy of Record

POWER RISER KEY NOTES

1. POWER COMPANY'S TRANSFORMER, PROVIDING THE BUILDING WITH 120/208 VOLT, 3 PHASE, 4-WIRE SERVICE
2. TRANSFORMER GROUNDING BY POWER COMPANY.
3. PROVIDE 1 #4 THWN COPPER GROUNDING ELECTRODE CONDUCTOR AND BOND THE SYSTEM NEUTRAL AT THE MAIN SERVICE. THE GROUNDING ELECTRODE CONDUCTOR SHALL BE BONDED AHEAD OF THE MAIN SWITCH AND SHALL BE CONNECTED TO TWO – 5/8"x10'-0" COPPERCLAD GROUND RODS, BUILDING STEEL, AND METAL COLD & HOT WATER PIPING. THE ELECTRICAL CONTRACTOR SHALL TEST THE RESISTANCE OF THE GROUNDING SYSTEM WITH A MEGGER AND SHALL INSTALL ADDITIONAL GROUND RODS AS REQUIRED TO OBTAIN A RESISTANCE OF 25 OHMS TO GROUND OR LESS. PROVIDE WRITTEN REPORT TO ENGINEER FOR APPROVAL.
4. 225 AMP FEEDER – ONE 3" CONDUIT WITH THREE #300MCM THWN-2 AL, ONE #300MCM THWN-2 AL NEUTRAL AND 1 #4 THWN-2 CU EQUIPMENT GROUND.
5. 225 AMP FEEDER – SERVICE ENTRANCE CONDUCTORS – 3" CONDUIT WITH THREE #300MCM THWN-2 AL, AND ONE #300MCM THWN-2 AL NEUTRAL.
6. NOT USED.
7. SEE PANEL SCHEDULE.
8. CONTRACTOR SHALL CONTACT POWER COMPANY WITHIN 10 DAYS OF AWARD OF CONTRACT AND OBTAIN AVAILABLE FAULT CURRENT AT UTILITY TRANSFORMER SECONDARY CONDUCTORS. CONTRACTOR SHALL PROVIDE THIS INFORMATION TO ENGINEER PRIOR TO ORDERING ANY EQUIPMENT OR MATERIALS. CONTRACTOR SHALL ALSO VERIFY PROPOSED UTILITY TRANSFORMER LOCATION WITH POWER COMPANY PRIOR TO ORDERING ANY MATERIALS OR EQUIPMENT.
9. PROVIDE #6 AWG COPPER TO MAIN TELEPHONE BACKBOARD GROUNDING TERMINAL BLOCK.
10. SEE "FAULT CURRENT PLACARD" NOTES FOR FAULT CURRENT LABELING REQUIREMENTS AT MAIN ELECTRIC SERVICE. CONTRACTOR SHALL OBTAIN ACTUAL AVAILABLE FAULT CURRENT AT TRANSFORMER SECONDARY LUGS FROM POWER COMPANY AND PROVIDE THIS INFORMATION TO ENGINEER FOR POSSIBLE RECALCULATION. THIS INFORMATION MUST BE PROVIDED TO ENGINEER PRIOR TO ORDERING ANY MATERIALS.
11. THREE #6 CU. THWN-2, ONE #10 CU. THWN-2 EQ. GND., 1.25" CONDUIT
12. 125 AMP FEEDER – ONE 2" CONDUIT WITH THREE #2/0 THWN-2 AL, ONE #2/0 THWN-2 AL NEUTRAL AND 1 #6 THWN-2 CU EQUIPMENT GROUND.
13. 100 AMP FEEDER – ONE 1.5" CONDUIT WITH THREE #1 THWN-2 AL, ONE #1 THWN-2 AL NEUTRAL AND 1 #8 THWN-2 CU EQUIPMENT GROUND.
14. ALL EXTERIOR ELECTRICAL EQUIPMENT SHALL BE INSTALLED ABOVE DFE (SEE ARCHITECTURAL ELEVATIONS). ALL OVER-CURRENT PROTECTION AND SERVICE DISCONNECT SWITCHES ON EXTERIOR SHALL ALSO BE INSTALLED SUCH THAT NO SWITCH HANDLE IS OVER 6'-7" ABOVE GRADE.
15. SEE "FAULT CURRENT PLACARD" NOTES FOR FAULT CURRENT LABELING REQUIREMENTS AT MAIN ELECTRIC SERVICE DISCONNECT. PROVIDE PERMANENT LABEL WITH INFORMATION SHOWN.

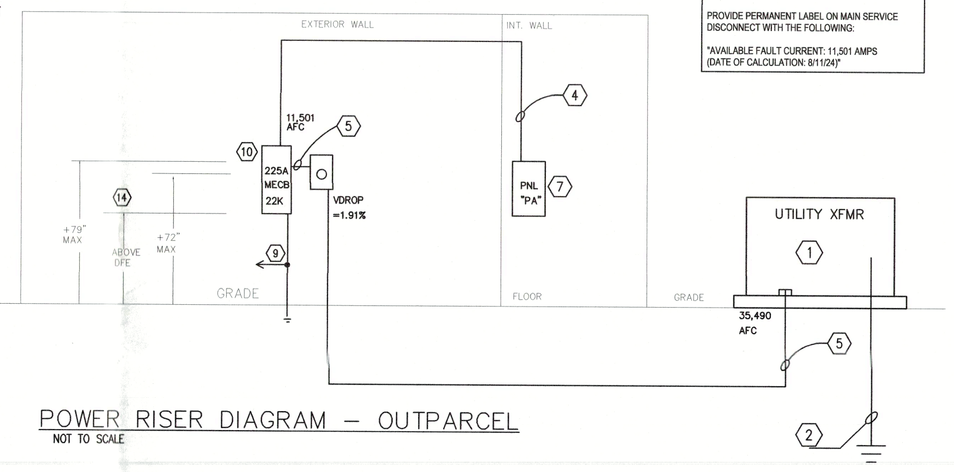

FAULT CURRENT PLACARD (OUTPARCEL DISC.)

INFORMATION PROVIDED FROM CALCULATION:

35,490 AVAILABLE FAULT CURRENT (AFC) AT TRANSFORMER SECONDARY LUGS.

PROVIDE PERMANENT LABEL ON MAIN SERVICE DISCONNECT WITH THE FOLLOWING:

*AVAILABLE FAULT CURRENT: 11,501 AMPS
(DATE OF CALCULATION: 8/11/24)

POWER RISER DIAGRAM – OUTPARCEL

NOT TO SCALE

ELECTRICAL PLAN KEY NOTES

1. 2#12 COPPER, 1#12 COPPER EQUIPMENT GROUND, 3/4" CONDUIT TO NEW CIRCUIT BREAKER IN PANEL INDICATED, TYPICAL ALL CIRCUITS UNLESS NOTED OTHERWISE.
2. LIGHT FIXTURES ARE OCCUPANCY-SENSOR CONTROLLED BY THE SENSOR WITH A MATCHING LOWER-CASE DESIGNATION.
3. EXIT SIGNS AND EMERGENCY "TWIN-HEAD" BATTERY PACKS SHALL BE CONNECTED TO THE LOCAL LIGHTING CIRCUIT AND WIRED AHEAD OF ALL SWITCHING.
4. SEE OCCUPANCY SENSOR TABLE, TYPICAL.
5. SWITCH EXTERIOR LIGHTS THRU TIME CLOCK/PHOTOCELL COMBINATION. SEE SITE LIGHTING CONTACTOR DETAILS.
6. COORDINATE LIGHT FIXTURE PHOTOMETRIC REQUIREMENTS WITH SITE LIGHTING DESIGNER.

SITE LIGHTING NOTE

SITE LIGHTING IS BY CIVIL ENGINEER. CONTRACTOR SHALL COORDINATE ALL REQUIREMENTS (CIRCUITING, PHOTOMETRICS, ETC.) WITH SITE LIGHTING DESIGNER PRIOR TO ROUGH-IN. COORDINATE BLDG.-MTD. LIGHTING ALSO WITH SITE LIGHTING DESIGNER PRIOR TO ROUGH-IN.

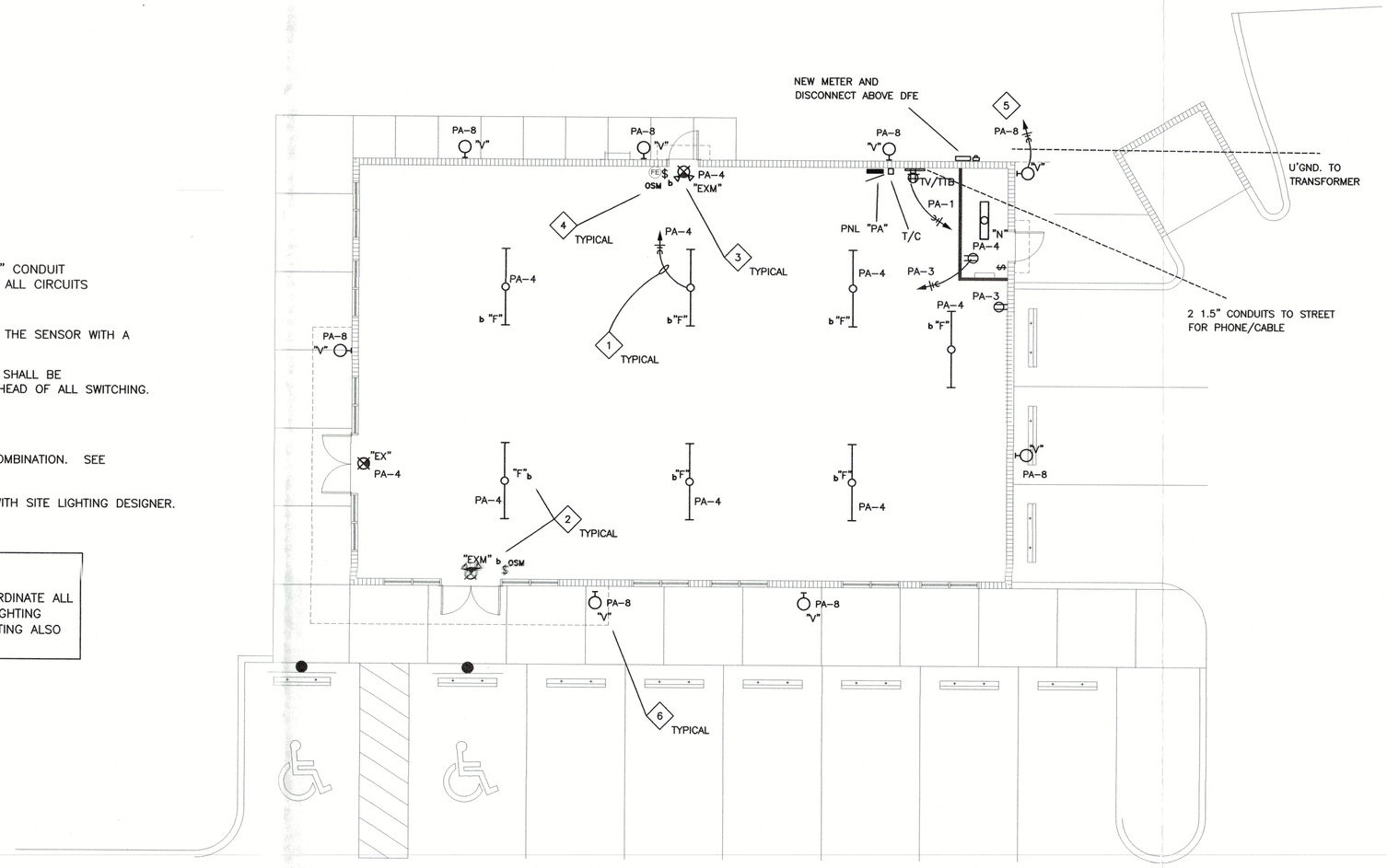

OUTPARCEL ELECTRICAL PLAN

SCALE: 1/8"=1'-0"

(ALL SITE LIGHTING IS BY OTHERS)

LIGHTING PLAN GENERAL NOTES

1. SWITCHES SHALL CONTROL ALL "SWITCHED" LIGHT FIXTURES IN ROOM TYPICAL UNLESS NOTED OTHERWISE. SEE KEYNOTES FOR EXCEPTIONS.
2. CONTRACTOR SHALL INSTALL A GREEN EQUIPMENT GROUNDING WIRE IN ALL CONDUITS AND SHALL BOND THE GROUND WIRE TO ALL DEVICES AND ELECTRICALLY WIRED EQUIPMENT. GROUNDING AND BONDING SHALL BE INSTALLED IN ACCORDANCE WITH NATIONAL ELECTRIC CODE, ARTICLE 250.
3. CONTRACTOR SHALL REFER TO ARCHITECTURAL REFLECTED CEILING PLANS FOR LOCATIONS OF ALL LIGHT FIXTURES. REFER TO ARCHITECTURAL LIFE SAFETY PLAN FOR ALL EXIT SIGNS.
4. LIGHT FIXTURES ARE SELECTED FOR PHOTOMETRIC PERFORMANCE, QUALITY, AND AESTHETICS. SUBSTITUTIONS REQUIRE FIXTURE SAMPLES AND PHOTOMETRIC DATA AT LEAST 10 DAYS PRIOR TO BID DATE. WRITTEN APPROVAL IS REQUIRED BY THE ENGINEER PRIOR TO BID DATE. CONTACT DAN SROKA (ENVISION LIGHTING) 941-243-0608 FOR PRICING.
5. PRIOR TO ORDERING MATERIALS AND EQUIPMENT, CONTRACTOR SHALL PROVIDE SUBMITTALS FOR ALL ELECTRICAL EQUIPMENT AND MATERIAL PROVIDED IN THIS PROJECT. SUBMITTALS SHALL INCLUDE SPECIFICATIONS SHEETS FOR ELECTRICAL EQUIPMENT. WRITTEN APPROVAL BY THE ENGINEER-OF-RECORD IS REQUIRED PRIOR TO ORDERING EQUIPMENT.
6. SEE LIGHT FIXTURE SUPPORT DETAIL – SHEET E00.

DAVID D. PATTON JR. PE, LLC
1515 JAMAICA WAY
NOKOMIS, FLORIDA 34275
FL PE #52909
941-993-4607

REVISION SCHEDULE

DELTA NO. DATE

PROJECT LOCATION:
BRISTA COMMONS, BUILDING TWO
3160 GULF OF MEXICO DRIVE
LONGBOAT KEY, FLORIDA

CLIENT INFORMATION:
MARK A. URSINI BRISTA HOMES
1656 MAIN STREET
SARASOTA, FLORIDA 34236
941-373-0500

LIC. #CB0059465

RECEIVED
AUG 28 2024
TOWN OF LONGBOAT KEY
Planning, Zoning & Building

BRISTA HOMES
1656 Main St, Sarasota, FL 34236
941.373.0500 | BRISTAHOMES.COM
LIC. #CBC059465

PERMIT SET

SEAL

DATE 05/8/2024
SCALE AS NOTED
DRAWN DDP
JOB # 22-100
SHEET NO. E-1

VOLTAGE: 120/208V, 3P, 4W			NOTES: 1. ALL SPACES SHALL BE W/ BUS.					PANEL:	PA		
PANEL TYPE: NQOB			2.COPPER BUS, COPPER GROUND					MAINS:	225	AMPS	
MOUNTING: SURFACE			3. BOLT-ON BREAKERS ONLY					MLO OR MCB:	MLO		
								A.I.C. RATING:	22,000	AMPS	
CKT #	CIRCUIT IDENTIFICATION	BRKR	POLE	PH "A"	PH "B"	PH "C"	POLE	BRKR	CIRCUIT IDENTIFICATION		CKT #
1	RCPTS.	20	1	A	-	-	1	20	LTG CONTROL		2
3	TV/TTB	20	1	-	B	-	1	20	LIGHTS		4
5	SPACE		1	-	-	C	1	20	LIGHTS		6
7	SPACE		1	A	-	-	1	20	EXT. BLDG. LTS.		8
9	SPACE		1	-	B	-	1		SPACE		10
11	SPACE		1	-	-	C	1		SPACE		12
13	SPACE		1	A	-	-	1		SPACE		14
15	SPACE		1	-	B	-	1		SPACE		16
17	SPACE		1	-	-	C	1		SPACE		18
19	SPACE		1	A	-	-	1		SPACE		20
21	SPACE		1	-	B	-	1		SPACE		22
23	SPACE		1	-	-	C	1		SPACE		24
25	SPACE		1	A	-	-	1		SPACE		26
27	SPACE		1	-	B	-	1		SPACE		28
29	SPACE		1	-	-	C	1		SPACE		30
31	SPACE		1	A	-	-	1		SPACE		32
33	SPACE		1	-	B	-	1		SPACE		34
35	SPACE		1	-	-	C	1		SPACE		36
37	SPACE		1	A	-	-	3	30	TVSS (APT #TE XDS)		38
39	SPACE		1	-	B	-		30			40
41	SPACE		1	-	-	C		30			42

CONNECTED KVA 1.56 1.50 1.00 2.34 AVG.

(L) LIGHTING:	3.00	KVA X	1.25	DEMAND FACTOR =	3.75	DEMAND LOAD	PANEL CALCULATIONS
(R) RECEPTACLES:	0.36	KVA X	1.00	DEMAND FACTOR =	0.36	DEMAND LOAD	DEMAND KVA 6.06
(R) RECEPTACLES:	0.00	KVA X	0.50	DEMAND FACTOR =	0.00	DEMAND LOAD	TIMES 1000
(H) HVAC	0.00	KVA X	1.00	DEMAND FACTOR =	0.00	DEMAND LOAD	DIVIDED BY 1.732
(E) EQUIPMENT:	0.70	KVA X	1.00	DEMAND FACTOR =	0.70	DEMAND LOAD	DIVIDED BY 208
(K) KITCHEN EQUIPMENT:	0.00	KVA X	0.65	DEMAND FACTOR =	0.00	DEMAND LOAD	
(S) SUBFEED:	0.00	KVA X	1.00	DEMAND FACTOR =	0.00	DEMAND LOAD	
LARGEST MOTOR:	5.00	KVA X	0.25	DEMAND FACTOR =	1.25	DEMAND LOAD	PANEL DEMAND AMPS 17

ESTIMATED LOAD CALCULATION - OUTPARCEL

OCCUPANCY: OFFICE (LOW-RISE)
SQUARE FEET: 2800 (TYPICAL FOR TENANT'S 2 THRU 6)

						kVA
LIGHTING	2800	SQ.FT. @	3.5	VA/SQ.FT.	=	10
TENANT SIGN					=	1.5
RECEPTACLES	2800	SQ.FT. @	1	VA/SQ.FT.	=	3
SHOW WINDOW RCPTS.	60	LIN.FT. @	200	VA/LIN.FT.	=	12.0
ELECTRIC VEHICLE CHARGERS:					=	0
HVAC (** SEE CALCULATION BELOW)					=	16
EWH (4.5 KW)					=	4.5
MISC.	2800	SQ.FT. @	2	VA/SQ.FT.	=	6
LARGEST MOTOR (25%)					=	5
FUTURE (20%)					=	12
				TOTAL kVA	=	**69**

VOLTAGE: 208V,3-PHASE

AMPS/PHASE: **192**

SERVICE RATED FOR 225 AMPS/PHASE

**** HVAC LOAD CALCULATION (SQUARE FOOT OR 80% OF BREAKER RATING:**

2800 SQ. FT. X 1 TON/300 SQ. FT. = 14 TONS 60/3 BREAKER kVA **17.3**

AT 1 kW/TON = 14 kW ASSUMING 80% OF BREAKER

At 0.85 PWR. FCTR. = **16 kVA** RATING

OCCUPANCY SENSOR TABLE

LV-k (OS)	CLG.-MOUNTED, LOW VOLTAGE, DUAL-TECHNOLOGY OCCUPANCY SENSOR (ACUITY #CM-PDT-10/CM-PDT-9, POWERPACK MP20). ACTIVATION OF ANY SENSOR WITH MATCHING LOWER-CASE DESIGNATION SHALL CAUSE ALL LIGHTS WITH SAME DESIGNATION TO TURN ON. PROVIDE POWER PACKS AS REQUIRED.
$^{OSM}	WALL-MTD., LINE VOLTAGE OCCUPANCY SENSOR WITH "OSM" SUPERSCRIPT INDICATES "ACUITY" #WSX-PDT-D-WH WITH "MANUAL-ON" REQUIREMENT.
LV-k (RC)	CLG.-MOUNTED, LOW-VOLTAGE, LARGE AREA (HALLWAY), ULTRA-SONIC, BI-DIRECTIONAL TECHNOLOGY (STEINEL #COM1-24). LOWER-CASE LETTER INDICATES FIXTURE(S) CONTROLLED. PROVIDE POWER PACK(S) AS REQUIRED.
(OS)^k	CEILING-MOUNTED, LINE VOLTAGE, STANDARD RANGE, DUAL-TECHNOLOGY 360° OCCUPANCY SENSOR (ACUITY #CMR-PDT-9) LOWER-CASE LETTER IDENTIFIES LIGHT FIXTURES W/ MATCHING LETTERS TO BE SWITCHED.

NOTE: ALL DEVICES MAY OR MAY NOT BE USED IN THIS PROJECT.

LIGHT FIXTURE SCHEDULE

TYPE	MFG	CATALOG NO.	LAMP TYPE	WATTS	VOLTS	MOUNTING	DESCRIPTION
EX	LITHONIA	EXG-LED-EL-M6	LED INTEGRAL	2	120	UNIVERSAL	EXIT SIGN (WHITE THERMOPLASTIC) WITH GREEN LETTERS
EXM	LITHONIA	ECG-LED-M6	LED INTEGRAL	2	120	UNIVERSAL	COMBINATION EXIT SIGN (WHITE THERMOPLASTIC)WITH EMERGENCY BATTERY BACKUP (GREEN LETTERS)
F	LITHONIA	CLX-L96-8000-SEF-L/LENS-MVOLT-EDAB-PROR	LED INTEGRAL (TUNABLE)	10	120	SURFACE MT. TO CLG.	8' SURFACE-MTD. STRIP
V	SPEC. BY OWNER		LED INTEGRAL (3500 KELVIN)	10	120	WALL MT. AT HT. PER ARCH.	TURTLE-COMPLIANT EXTERIOR LIGHT FIXTURE SPECIFIED BY EXTERIOR LIGHTING DESIGNER

CONTACT DAN SROKA: 941-243-0608 (ENVISION LIGHTING SYSTEMS)

DAVID D. PATTON, JR. PE, LLC
1613 LANDFALL DRIVE
NOKOMIS, FLORIDA 34275
FL. PE #52909
941-993-4607

REVISION SCHEDULE

DELTA NO. DATE

PROJECT LOCATION:
BRISTA COMMONS, BUILDING TWO
3160 GULF OF MEXICO DRIVE
LONGBOAT KEY, FLORIDA

CLIENT INFORMATION:
MARK A. URSINI BRISTA HOMES
1656 MAIN STREET
SARASOTA, FLORIDA 34236
941-373-0500
LIC. #CB0059465

RECEIVED
AUG 28 2024
TOWN OF LONGBOAT KEY
Planning, Zoning & Building

BRISTA HOMES
1656 Main St, Sarasota, FL 34236
941.373.0500 | BRISTAHOMES.COM
LIC. #CBC059465

PERMIT SET

SEAL

DATE 05/8/2024
SCALE AS NOTED
DRAWN DDP
JOB # 22-100
SHEET NO. E-2

BLDG PERMIT PLANS
FILE
Copy of Record

NPDES

MECHANICAL SYMBOL LEGEND

GENERAL SYMBOLS

- EQUIPMENT IDENTITY (SEE EQUIPMENT ABBREVIATION LIST AND SCHEDULES)
- EQUIPMENT NUMBER
- SYSTEM NUMBER (IF APPLICABLE)
- INDICATES DETAIL, PLAN, SECTION, AND/OR DIAGRAM APPLIES ONLY WHERE INDICATED ON DRAWINGS
- INDICATES DRAWING ON WHICH DETAIL APPEARS
- INDICATES TYPICAL DETAIL, TYP. THROUGHOUT ALL CONTRACT DRAWINGS
- INDICATES DRAWING ON WHICH DETAIL APPEARS
- INDICATES SECTION NUMBER
- INDICATES ON WHICH DRAWING SECTION APPEARS
- INDICATES REVISION & NUMBER
- CONNECT NEW TO EXISTING
- DEMOLISH TO THIS POINT
- KEYED NOTE NUMBER
- CONTROL DAMPER, OPPOSED BLADE WITH ACTUATOR
- UNDERCUT DOOR
- DOOR LOUVER (FREE AREA REQUIRED INDICATED IN SQUARE FEET)
- SUPPLY AIR
- RETURN OR EXHAUST AIR
- FIRE DAMPER W/ ACCESS DOOR
- SMOKE DAMPER W/ ACCESS DOOR
- SMOKE DETECTOR
- THERMOSTAT

DUCT SYMBOLS

DOUBLE LINE		SINGLE LINE
	EXISTING EQUIPMENT OR DUCTWORK TO BE REMOVED	
	EXISTING DUCTWORK TO REMAIN	
	NEW DUCTWORK	
VD	MANUAL VOLUME DAMPER (MVD) MOTOR OPERATED DAMPER (MOD)	VD
AD	ACCESS DOOR	AD
	RADIUS ELBOW (R=1.5)	
	ELBOW W/ TURNING VANES	
	REC. BRANCH DUCT TAKE-OFF W/ VD	
	ROUND BRANCH DUCT TAKE-OFF W/ VD	
	RISE OR DROP DIRECTION OF AIR FLOW	
	FLEXIBLE CONNECTION (FXC)	
CFM	DIFFUSER	CFM
CFM	SUPPLY AIR GRILLE (G) OR SUPPLY AIR REGISTER (R)	CFM

PIPING SYMBOLS

- PIPE RISING UP
- PIPE DROPPING DOWN
- DIRECTION OF FLOW
- GATE VALVE
- BUTTERFLY VALVE
- BALL VALVE
- CHECK VALVE
- AUTOMATIC CONTROL VALVE
- AUTOMATIC CONTROL VALVE (3-WAY)
- PRESSURE REDUCING VALVE (PSI)
- STRAINER
- F.S. FLOW SWITCH
- THERMOMETER
- PRESSURE GAUGE
- PIPE WELL

MECHANICAL ABBREVIATIONS LEGEND

AFF	ABOVE FINISHED FLOOR	DP	DIFFERENTIAL PRESSURE
AFG	ABOVE FINISHED GRADE	EA	EXHAUST AIR
AFR	ABOVE FINISHED ROOF	EER	ENERGY EFFICIENCY RATIO
AHU	AIR HANDLING UNIT	EF	EXHAUST FAN
AI	ANALOG INPUT	EAT	ENTERING AIR TEMPERATURE
AO	ANALOG OUTPUT AUTO AUTOMATIC	ESP	EXTERNAL STATIC PRESSURE
BOD	BOTTOM OF DUCT	EWT	ENTERING WATER TEMPERATURE
BOP	BOTTOM OF PIPE	ERV	ENERGY RECOVERY VENTILATOR
BHP	BRAKE HORSE POWER		PROTECTION
BTU	BRITISH THERMAL UNIT	FC	FAIL CLOSED
BTUH	BRITISH THERMAL UNIT PER HOUR	FC	FAN COIL (EXISTING)
C	COMMON	FCU	FAN COIL UNIT
CD	CONDENSATE	FD	FIRE DAMPER
CFM	CUBIC FEET PER MINUTE	FF	FLOW FEEDBACK/STATUS SIGNAL
CH	CHILLER	FLA	FULL LOAD AMPS
CHWS	CHILLED WATER SUPPLY	FO	FAIL OPEN
CHWR	CHILLED WATER RETURN	FPM	FEET PER MINUTE
CO2	CARBON DIOXIDE	FT	FEET
COP	COEFFICIENT OF PERFORMANCE	GPM	GALLONS PER MINUTE
CU	CONDENSING UNIT	H	HUMIDITY
DAC	DEHUMIDIFICATION AHU	HS	HUMIDISTAT
DB	DRY BULB	HP	HEAT PUMP
DCU	DEHUMIDIFICATION CU	HP	HORSEPOWER
DDC	DIRECT DIGITAL CONTROL	HWS	HOT WATER SUPPLY
DEGF	DEGREE FAHRENHEIT	HPS	HIGH PRESSURE STEAM
DI	DIGITAL INPUT	HWR	HOT WATER RETURN
DN	DOWN	IAQ	INDOOR AIR QUALITY
DO	DIGITAL OUTPUT	IN	INCH
DWG	DRAWING	KW	KILOWATT
		LAT	LEAVING AIR TEMPERATURE
LBS	POUNDS	S.S.	STAINLESS STEEL
LPS	LOW PRESSURE STEAM	SP	STATIC PRESSURE
LPR	LOW PRESSURE RETURN	T	TEMPERATURE
LWT	LEAVING WATER TEMPERATURE	V-PH	VOLTAGE-PHASE
M	MOTORIZED	TD	TIME DELAY
MBH	THOUSAND BTUH	TS	TEMPERATURE SENSOR
MCA	MINIMUM CIRCUIT AMPACITY	TSP	TOTAL STATIC PRESSURE
MOCP	MAXIMUM OVER CURRENT PROTECTION	UH	UNIT HEATER
NC	NORMALLY CLOSED	UNO	UNLESS OTHERWISE NOTED
NO	NORMALLY OPEN	VD	VOLUME DAMPER
NTS	NOT TO SCALE	VFD	VARIABLE FREQUENCY DRIVE
OBD	OPPOSED BLADE DAMPER	VPH	VOLTS/PHASE
OA	OUTDOOR AIR	WB	WET BULB
P	PRESSURE	WG	WATER GAUGE
PF	PROPORTIONAL, LINEARIZE FEEDBACK, 4-20mA SIGNAL	WR	CHILLED WATER RESET 4-20 mA SIGNAL
PRV	PRESSURE REDUCING VALVE	W	WITH
PRS	PRESSURE REDUCING STATION	WO	WITHOUT
PSI	POUNDS PER SQUARE INCH		
PVC	POLYVINYL CHLORIDE		
RA	RETURN AIR		
RH	RELATIVE HUMIDITY		
RPM	REVOLUTIONS PER MINUTE		
RSL	REFRIGERANT SUCTION/LIQUID		
RTU	ROOFTOP PACKAGED UNIT		
SA	SUPPLY AIR		
SF	SQUARE FEET		
SS	START/STOP SIGNAL		

GENERAL NOTES

1. DO NOT SCALE FROM THESE DRAWINGS. EXACT DIMENSIONS SHALL BE TAKEN FROM ARCHITECTURAL DRAWINGS.
2. ALL INDICATED WORK SHALL BE PERFORMED BY THE MECHANICAL CONTRACTOR UNLESS OTHERWISE NOTED.
3. ALL WORK SHALL BE INSTALLED IN ACCORDANCE WITH THE REQUIREMENTS OF ALL APPLICABLE CODES AND REGULATIONS INCLUDING BUT NOT LIMITED TO NATIONAL, CITY, STATE AND LOCAL ORDINANCES WHICH MAY BE IN EFFECT. ALL MECHANICAL MATERIALS, INSTALLATION PROCEDURES AND SYSTEM LAYOUTS SHALL BE APPROVED BY ALL APPLICABLE CODE ENFORCEMENT AUTHORITIES HAVING JURISDICTION, AND IT SHALL BE THE MECHANICAL CONTRACTOR'S RESPONSIBILITY TO PAY FOR ALL NECESSARY PERMITS AND APPROVALS FOR THIS INSTALLATION.
4. IT IS THE RESPONSIBILITY OF THE MECHANICAL CONTRACTOR TO REVIEW THESE PLANS AND SPECIFICATIONS, AS WELL AS THE RELATED PLUMBING, FIRE PROTECTION, ELECTRICAL, STRUCTURAL, ARCHITECTURAL INTERIOR DECOR AND SITE ENGINEERING DRAWINGS TO BECOME FAMILIAR WITH THE FULL PROJECT SCOPE. IN ADDITION, THIS CONTRACTOR MUST COORDINATE WITH AN OWNER REPRESENTATIVE TO FULLY UNDERSTAND ALL REQUIREMENTS WHICH MAY NOT BE SPECIFIED HEREIN AND WHICH THE OWNER MAY CONSIDER PART OF THIS CONTRACT. DURING THE COURSE OF CONSTRUCTION COORDINATION AND ACTUAL CONSTRUCTION, IT IS THE RESPONSIBILITY OF THE MECHANICAL CONTRACTOR TO WORK CLOSELY WITH ALL ACCOMPANYING CONTRACTORS AND TRADESMEN IN ORDER TO ENSURE A SMOOTH RUNNING AND CAREFULLY COORDINATED INSTALLATION.
5. ANY DISCREPANCIES OR INADEQUACIES WITHIN THESE BID DOCUMENTS OR BETWEEN THESE BID DOCUMENTS AND THE RELATED PLUMBING, FIRE PROTECTION, ELECTRICAL, STRUCTURAL, ARCHITECTURAL, INTERIOR DECOR AND SITE ENGINEERING DRAWINGS, OR BETWEEN THESE BID DOCUMENTS AND FIELD CONDITIONS MUST BE BROUGHT TO THE ATTENTION OF THE OWNER, ARCHITECT AND ENGINEER PRIOR TO BID SUBMISSION.
6. WHERE CONFLICTS EXIST BETWEEN THE INFORMATION INCLUDED IN THESE DRAWINGS OR BETWEEN INFORMATION PROVIDED IN THESE DRAWINGS AND THE PROJECT SPECIFICATIONS OR WITHIN THE PROJECT SPECIFICATIONS, THE MORE STRINGENT AND/OR HIGHEST COST REQUIREMENTS SHALL APPLY. SHOULD THE CONTRACTOR REQUIRE FURTHER CLARIFICATION, AN RFI SHALL BE SUBMITTED FOR CLARIFICATION. WHERE CONFLICTS DO EXIST, THE PROJECT ENGINEER OF RECORD SHALL HAVE THE SOLE DISCRETION AND RIGHT TO PROVIDE INTERPRETATION OF INTENT OF THE CONTRACT DOCUMENTS AS REQUIRED AND THIS INTERPRETATION SHALL SERVE TO DIRECT THE CONTRACTOR IN ACCORDANCE WITH THE IMPLIED INTENT OF THE CONSTRUCTION DOCUMENTS WITHOUT ADDITIONAL COST TO THE PROJECT.
7. THE MECHANICAL CONTRACTOR SHALL PROVIDE A COMPLETE SET OF RECORD "AS-BUILT" DRAWINGS INDICATING THE PRECISE LOCATION OF ALL SYSTEMS, EQUIPMENT CONCEALED OR EMBEDDED PIPING, PIPING CONNECTIONS AND ACCESS DOORS. THESE DRAWINGS SHALL ALSO INCLUDE ALL CHANGES AND DEVIATIONS FROM THE BID DOCUMENTS.
8. CONTRACTOR SHALL COORDINATE EXACT LOCATIONS OF NEW MECHANICAL EQUIPMENT WITH NEW LIGHT LOCATIONS AND TILE LOCATIONS. REFER TO ARCHITECT'S REFLECTED CEILING PLAN LAYOUT.
9. ALL DUCT DIMENSIONS SHOWN ON DRAWINGS ARE CLEAR INSIDE DIMENSIONS. AIR VELOCITY SHALL NOT EXCEED 650 FEET PER MINUTE IN DWELLING UNITS.
10. RUN ALL DUCTWORK AND PIPING WITH AS FEW OFFSETS AS POSSIBLE THROUGHOUT THE ENTIRE BUILDING. COORDINATE AND VERIFY WITH OTHER CONTRACTORS AS NOT TO INTERFERE WITH PLUMBING, FIRE PROTECTION PIPING, LIGHTING SYSTEMS, ETC.
11. ALL REQUIRED OFFSETS, RISES AND DROPS DUE TO POSSIBLE OBSTRUCTIONS OF PIPE RUNS ARE NOT NECESSARILY SHOWN. MECHANICAL CONTRACTOR SHALL BE RESPONSIBLE FOR ALL TRANSITIONS, FITTINGS, ELBOWS, DUCTWORK, PIPING, SUPPORTS, ETC. NECESSARY FOR A PROPER INSTALLATION AND OPERATION OF NEW HVAC SYSTEM. MECHANICAL CONTRACTOR SHALL INCLUDE A CONTINGENCY IN HIS BID TO OFFSET ANY COST REQUIRED FOR ADDITIONAL FITTINGS AND LABOR THAT MAY BE REQUIRED.
12. ALL EXPOSED HORIZONTAL AND VERTICAL DUCTWORK AND PIPING SHALL BE INSTALLED IN A NEAT ARRANGEMENT IN LOCATIONS WHICH ARE THE MOST INCONSPICUOUS. VERTICAL DROPS SHALL BE KEPT TO AN ABSOLUTE MINIMUM AND THEIR FINAL LOCATIONS SHALL BE COORDINATED AND RUN WITHIN CHASES, WALLS, SOFFITS WITH OTHER MECHANICAL/ ELECTRICAL FEEDS. ALL SUCH LOCATIONS ARE TO BE REVIEWED WITH AN OWNER REPRESENTATIVE AND ARCHITECT PRIOR TO INSTALLATION.
13. ALL BRANCH DUCTS TO AIR DEVICES SHALL BE PROVIDED WITH VOLUME DAMPER IN THE BRANCH CONNECTION UNLESS NOTED OTHERWISE. ALL ROUND BRANCH DUCT CONNECTIONS SHALL BE PROVIDED WITH CONICAL SPIN-IN FITTING WITH INTEGRAL VOLUME DAMPER.
14. ALL DUCT PENETRATIONS THROUGH A RATED FLOOR/CEILING ASSEMBLY SHALL BE PROVIDED WITH A FIRE DAMPER. FOR AIR DEVICES INSTALLED IN A RATED FLOOR/CEILING ASSEMBLY, INSTALL A CEILING RADIATION DAMPER. REFER TO DETAIL SHEET.
15. THROUGH PENETRATIONS OF FIRE RESISTANCE RATED HORIZONTAL ASSEMBLIES SHALL BE PROTECTED BY AN APPROVED THROUGH-PENETRATION FIRESTOP SYSTEM INSTALLED AND TESTED IN ACCORDANCE WITH ASTM E814 OR UL 1479, WITH A MINIMUM POSITIVE PRESSURE DIFFERENTIAL OF 0.01 INCH OF WATER (2.49PA). THE SYSTEM SHALL HAVE AN F RATING/T RATING OF NOT LESS THAN 1 HOUR BUT NOT LESS THAN THE REQUIRED RATING OF THE FLOOR PENETRATED. SEE ARCHITECTURAL DRAWINGS FOR RATED ASSEMBLY LOCATIONS, RATINGS AND DETAILS.

    EXCEPTIONS: FLOOR PENETRATIONS CONTAINED AND LOCATED WITHIN THE CAVITY OF A WALL ABOVE THE FLOOR OR BELOW THE FLOOR DO NOT REQUIRE A T RATING.
16. DUCT SMOKE DETECTORS SHOWN ON PLANS ARE DIAGRAMMATIC. REFER TO MANUFACTURERS INSTRUCTIONS FOR EXACT/OPTIMUM LOCATION IN DUCTWORK. DUCT SMOKE DETECTORS SHALL BE PURCHASED BY THE ELECTRICAL CONTRACTOR, AND INSTALLED BY THE MECHANICAL CONTRACTOR. WIRING INSTALLATION SHALL BE BY THE FIRE ALARM CONTRACTOR.
17. CONNECTION TO ANY GAS FIRED EQUIPMENT TO BE BY THE PLUMBING CONTRACTOR, REGARDLESS OF WHO PROVIDES EQUIPMENT.
18. CONDENSATE SHALL BE PIPED FULL SIZE TO THE NEAREST APPROVED FLOOR OR HUB DRAIN VIA AN INDIRECT CONNECTION.
19. DRYER EXHAUST DUCTWORK SHALL BE CONSTRUCTED OF MIN. 0.016" GALVANIZED STEEL WITH A SMOOTH INTERIOR AND NO PROJECTIONS. JOINTS SHALL RUN IN DIRECTION OF AIRFLOW. PROVIDE FLAPPER STYLE GRAVITY BACKDRAFT DAMPER AT TERMINATION OF EXHAUST OUTLET INTEGRAL TO WALL OR ROOF CAP. INSTALL PERMANENT LABEL AT DRYER CONNECTION LISTING THE ACTUAL FIELD INSTALLED EQUIVALENT LENGTH OF THE CONCEALED VENT DUCT.
20. INSULATE EACH REFRIGERANT LINESET WITH 1-INCH FLEXIBLE, CLOSED CELL ELASTOMERIC INSULATION. PROVIDE ALUMINUM JACKETING FOR EXPOSED PIPING. PROVIDE EXTERIOR PIPING PORTS WITH LOCKING TYPE TAMPER RESISTANT CAPS.
21. MOUNT ALL THERMOSTATS ABOVE FINISHED FLOOR AT HEIGHT APPROVED BY ARCHITECT. COORDINATE LOCATION WITH ARCHITECTURAL INTERIOR ELEVATIONS.
22. INSTALL SLEEVES FOR PIPING PENETRATIONS OF WALLS, CEILINGS, AND FLOORS. INSTALL CHROME PLATED ESCUTCHEONS FOR PIPING PENETRATIONS OF WALLS, CEILINGS, AND FLOORS. REFER TO DETAIL SHEET FOR ROOF PENETRATIONS.
23. WOOD SUPPORTS FOR PIPING OR DUCTWORK ROUTED ALONG THE ROOF ARE NOT ACCEPTABLE. REFER TO DETAILS FOR PROPER SUPPORTS.
24. ALL PLUMBING VENTS AND BUILDING EXHAUST SHALL BE LOCATED A MINIMUM OF 10 FEET FROM BUILDING INTAKES (INCLUDING OPERABLE WINDOWS).
25. MAINTAIN MANUFACTURER'S RECOMMENDED SERVICE CLEARANCES AROUND EQUIPMENT AT A MINIMUM. DO NOT ROUTE PIPING, DUCTWORK, CONTROL WIRE, ETC. THROUGH THE SERVICE CLEARANCE AREAS.
26. REFER TO PROJECT SPECIFICATIONS, DIVISION 23, FOR ADDITIONAL INFORMATION.
27. ALL MECHANICAL EQUIPMENT SHALL BE PROVIDED WITH A FACTORY DISCONNECT SWITCH, STARTER, VFD OR MOTOR RATED SWITCH AS REQUIRED FOR CODE COMPLIANT OPERATION OF ALL MOTORIZED EQUIPMENT IN ACCORDANCE WITH CODE AND THE DESIGN INTENT ASSOCIATED WITH THESE DRAWINGS. COORDINATE ALL DISCONNECTS AND STARTER REQUIREMENTS WITH THE PROJECT ELECTRICAL CONTRACTOR PRIOR TO BID TO ENSURE A COORDINATED INSTALLATION.
28. CONTRACTOR SHALL INSTALL ALL EQUIPMENT WITH VIBRATION ISOLATION AND SEISMIC SUPPORTS IN ACCORDANCE WITH ASHRAE APPLICATION HANDBOOK CHAPTER 48 - NOISE AND VIBRATION CONTROL TABLE 47 AND CODES.
29. ANY COST INCURRED AS A RESULT OF VALUE ENGINEERING OR DEVIATIONS FROM THE BASIS OF DESIGN INDICATED IN THE CONTRACT DOCUMENTS (E.G. ELECTRICAL MODIFICATIONS TO ACCOMMODATE ALTERNATE EQUIPMENT SELECTIONS, DESIGN RELATED EXPENSES FOR REQUIRED DRAWING MODIFICATIONS, ETC.) SHALL BE THE SOLE RESPONSIBILITY OF THE CONTRACTOR. NO INCREASE IN CONTRACT COST WILL BE GRANTED UNLESS BORNE BY AND APPROVED IN WRITING BY THE OWNER. CONTRACT DOCUMENTS ARE DEFINED TO INCLUDE ALL DISCIPLINES AND DIVISIONS OF THE CONTRACT.

NPDES

MECHANICAL, ELECTRICAL, AND PLUMBING REVIEWS WILL BE DEFERRED TO FIELD INSPECTORS

Permit # 2024-0986
REVIEWED FOR CODE COMPLIANCE
LONGBOAT KEY BUILDING DEPT.
AUG 28 2024
APPROVED
Reviewer: PE M+P

BLDG PERMIT PLANS
FILE
Copy of Record

BLDG PERMIT PLANS
FILE
Copy of Record

NPDES

THIS ITEM HAS BEEN ELECTRONICALLY SIGNED AND SEALED BY ANTHONY LUKASZ, PE, ON THE DATE ADJACENT TO THE SEAL USING A SHA AUTHENTICATION CODE. PRINTED COPIES OF THIS DOCUMENT ARE NOT CONSIDERED SIGNED AND SEALED AND THE SHA AUTHENTICATION CODE MUST BE VERIFIED ON ANY ELECTRONIC COPIES.

genesis engineering group, llc.
2601 cattlemen rd., ste 501
sarasota, fl 34232
phone 954-600-
genesis
www.genieng.net

NPDES

SEAL:
ANTHONY LUKASZ LICENSE No. 94249 STATE OF FLORIDA PROFESSIONAL ENGINEER

BRISTA HOMES
3400 Matlacha Pass Rd. (941) 575
941.373.0500 BRISTAHOMES.COM
CGC1526041

BRISTA COMMONS, BUILDING TWO

~~3120 - 3150~~ 3160 GULF OF MEXICO DRIVE

LONGBOAT KEY, FLORIDA

NPDES

NO.	REVISION	DATE

DATE:	07/15/24
JOB NUMBER:	24-080
FILE NAME:	
DRAWN BY:	RPM
CHECKED BY:	TL
DRAWING TITLE:	GENERAL NOTES - MECHANICAL

DRAWING NO. **M-0**

MECHANICAL, ELECTRICAL, AND PLUMBING REVIEWS WILL BE DEFERRED TO FIELD INSPECTORS

NPDES RECEIVED
AUG 28 2024
TOWN OF LONGBOAT KEY
Planning, Zoning & Building

BLDG PERMIT PLANS
FILE
Copy of Record

MECHANICAL ABBREVIATION, LEGENDS AND GENERAL NOTES
NOT TO SCALE

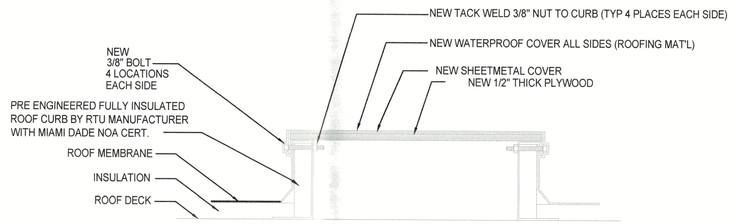

DETAIL SHOWN FOR REFERENCE ONLY FOR ATTACHMENT PURPOSES. CODE COMPLIANCE SHALL BE DETERMINED AND VERIFIED BY A LICENSED STRUCTURAL INSPECTOR. REFER TO ARCHITECTURAL AND STRUCTURAL PLANS FOR ALL ROOFING AND DECK MATERIALS.

RTU CURB CAP DETAIL

NO SCALE

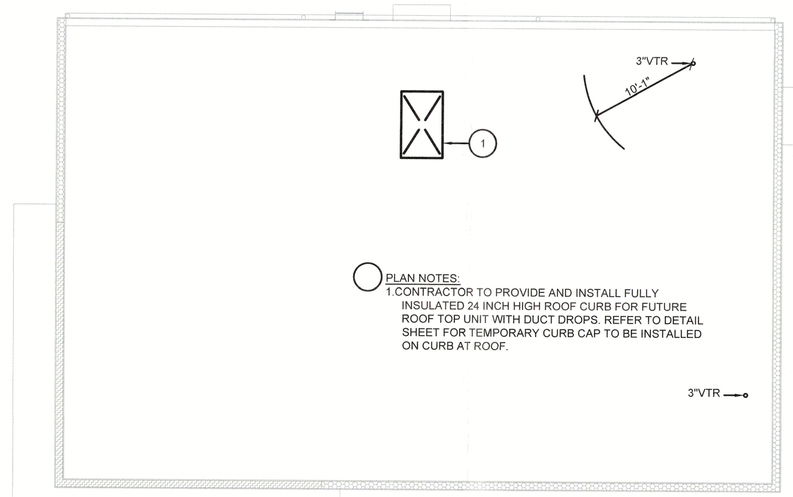

PLAN NOTES:
1. CONTRACTOR TO PROVIDE AND INSTALL FULLY INSULATED 24 INCH HIGH ROOF CURB FOR FUTURE ROOF TOP UNIT WITH DUCT DROPS. REFER TO DETAIL SHEET FOR TEMPORARY CURB CAP TO BE INSTALLED ON CURB AT ROOF.

NEW MECHANICAL ROOF PLAN

SCALE: 1/8"=1'-0"

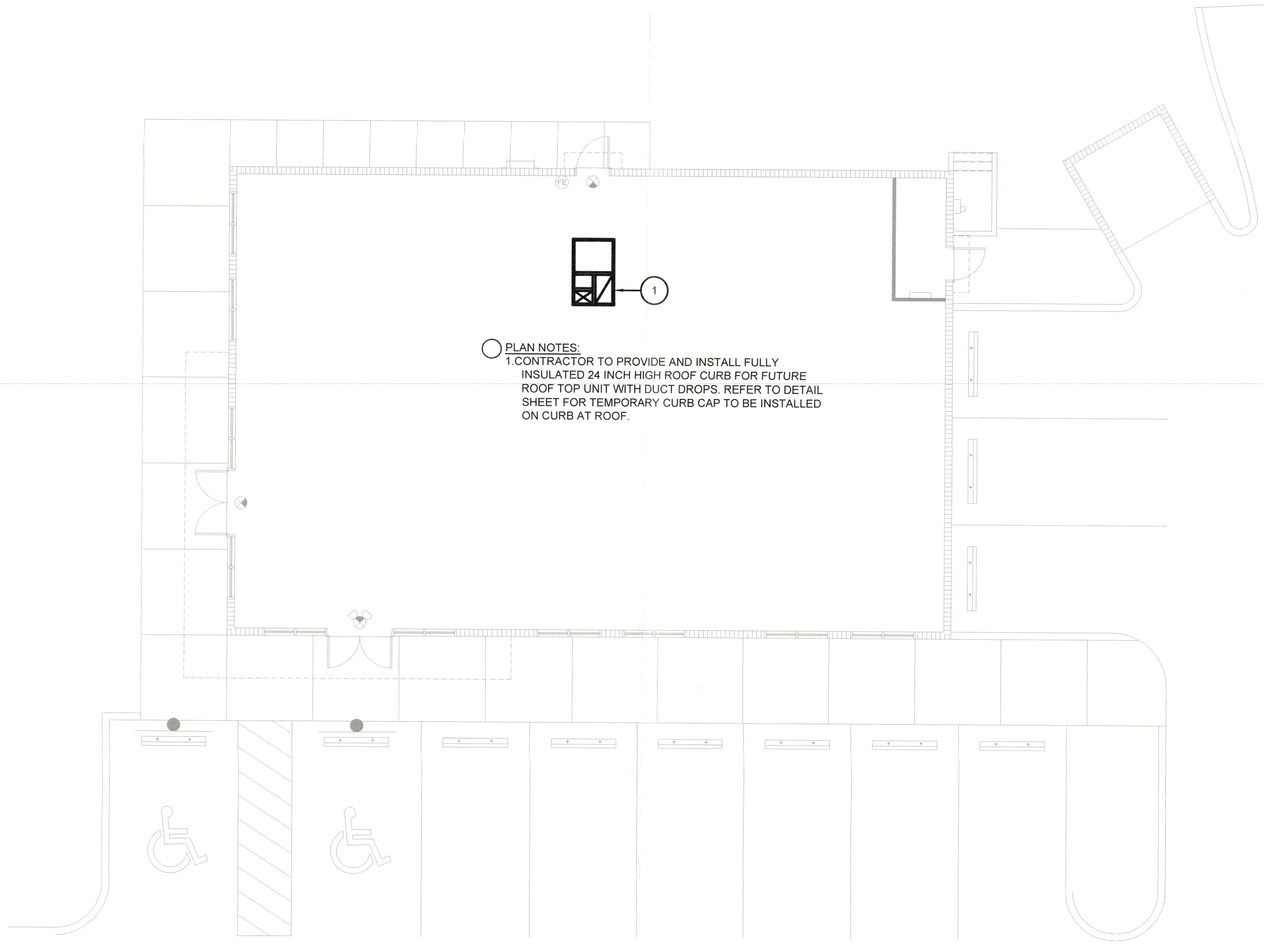

PLAN NOTES:
1. CONTRACTOR TO PROVIDE AND INSTALL FULLY INSULATED 24 INCH HIGH ROOF CURB FOR FUTURE ROOF TOP UNIT WITH DUCT DROPS. REFER TO DETAIL SHEET FOR TEMPORARY CURB CAP TO BE INSTALLED ON CURB AT ROOF.

NEW MECHANICAL FLOOR PLAN

SCALE: 1/8"=1'-0"

RECEIVED
AUG 2 8 2024
TOWN OF LONGBOAT KEY
Planning, Zoning & Building

THIS ITEM HAS BEEN ELECTRONICALLY SIGNED AND SEALED BY ANTHONY LUKASZ, PE, ON THE DATE ADJACENT TO THE SEAL USING A SHA AUTHENTICATION CODE. PRINTED COPIES OF THIS DOCUMENT ARE NOT CONSIDERED SIGNED AND SEALED AND THE SHA AUTHENTICATION CODE MUST BE VERIFIED ON ANY ELECTRONIC COPIES.

genesis engineering group, llc.
2601 cattlemen rd, ste 501
sarasota, fl 34232
project #24-080
www.geneng.net

SEAL:

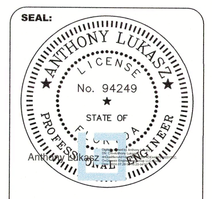

BRISTA HOMES
Bristo Mobile Sales Corporation, FL 34236
941.373.0500 | BRISTAHOMES.COM
LIC. #CBC1260500

BRISTA COMMONS, BUILDING TWO
3120 - 3150 GULF OF MEXICO DRIVE
LONGBOAT KEY, FLORIDA

NO.	REVISION	DATE

DATE:	07/15/24
JOB NUMBER:	24-080
FILE NAME:	
DRAWN BY:	RPM
CHECKED BY:	TL
DRAWING TITLE:	FLOOR PLANS - MECHANICAL

DRAWING NO.

M-1

MECHANICAL SPECIFICATIONS

1. GENERAL

PROVIDE MATERIALS, EQUIPMENT, ACCESSORIES, INCIDENTALS, ARTICLES, ITEMS, OPERATIONS, INCLUDING LABOR, NECESSARY FOR COMPLETION OF WORK INDICATED AND/OR CALLED FOR ON THESE DRAWINGS. SUBMIT SHOP DRAWINGS AND PRODUCT DATA ON ALL EQUIPMENT, PIPE, DUCTWORK, AND INSULATION.

PROVIDE A COPY OF BOUND CLOSE-OUT DOCUMENTS TO THE ARCHITECT FOR APPROVAL. PROVIDE TWO BOUND COPIES OF CLOSE OUT DOCUMENTS TO THE OWNER'S REPRESENTATIVE AFTER APPROVAL. CLOSE OUT DOCUMENTS SHALL INCLUDE COMPLETE I.O.M.'S FOR EACH PIECE OF EQUIPMENT, A COPY OF THE SEQUENCE OF OPERATIONS AS PROGRAMMED, A FULL-SIZE SET OF AS-BUILT PLANS AND FACTORY AUTHORIZED SERVICE START-UP FORMS FOR EACH PIECE OF EQUIPMENT INDICATING PROPER OPERATION ACROSS THE SEQUENCE.

2. REGULATORY REQUIREMENTS

ALL WORK SHALL BE PER THE PREVAILING BUILDING CODES, NEC, NFPA, UL, STATE, LOCAL INSPECTORS AND OTHER APPLICABLE CODES.

3. COORDINATION

INSTALLATION OF ALL WORK SHALL BE COORDINATED WITH OTHER TRADES AND WITH EXISTING CONDITIONS. CONTRACTOR SHALL VISIT THE SITE AND VERIFY SIZES, CAPACITY, PERFORMANCE, AND LOCATION OF ALL EXISTING WORK.

4. GUARANTEES

THE CONTRACTOR SHALL PROVIDE A ONE YEAR WRITTEN GUARANTEE FOR ALL MATERIALS AND LABOR FROM THE DATE OF SUBSTANTIAL COMPLETION. GUARANTEE SHALL COVER ALL LABOR AND MATERIALS TO REPLACE DEFECTIVE MATERIALS AND TO ENSURE PROPER OPERATION OF ALL SYSTEMS.

5. INSTALLATION

A. ALL EQUIPMENT AND MATERIAL SHALL BE INSTALLED PER THEIR RESPECTIVE MANUFACTURER'S WRITTEN INSTRUCTIONS. PROVIDE ADEQUATE CLEARANCE FOR ALL EQUIPMENT AND MATERIAL FOR REGULAR MAINTENANCE, REMOVAL AND AIR FLOW. CONTRACTOR SHALL PROVIDE CONTROLS, INCLUDING THERMOSTATS, CONTROL POWER TRANSFORMERS, WIRING, PROGRAMMING, ETC., TO OPERATE ALL EQUIPMENT UTILIZED FOR THIS PROJECT. ADJUST AIR HANDLING UNITS, EXHAUST FANS, AND AIR DEVICES TO PROVIDE CFM'S AS SHOWN.

B. STRAPS MAY BE USED ON DUCTS 24" WIDE AND SMALLER, ALL OTHERS SHALL BE SUPPORTED ON TRAPEZE WITH HANGER RODS.

6. DUCTWORK

A. ALL DUCTWORK, NEW AND EXISTING, AS ADDRESSED IN THE CONSTRUCTION DOCUMENTS, SHALL BE FREE OF LEAKAGE. ALL WORK SHALL BE PER LATEST EDITION OF SMACNA. REFER TO SMACNA, ASHRAE, MECHANICAL AND ENERGY CODES FOR SEAL AND LEAKAGE CLASS RATINGS FOR ALL DUCT SYSTEMS. ALL DUCT SYSTEMS SHALL BE SEALED TO CLASS A.

B. SINGLE WALL GALVANIZED STEEL DUCTS: ASTM A525 OR ASTM A527 GALVANIZED STEEL SHEET, LOCK-FORMING QUALITY, HAVING ZINC COATING OF .90 OZ. PER SQ.FT. FOR EACH SIDE IN CONFORMANCE WITH ASTM A90.

C. FLEXIBLE FIBERGLASS DUCT: FLEXIBLE FIBERGLASS DUCT WITH A MAXIMUM THERMAL CONDUCTIVITY OF 0.23 BTU/HR - DEGREES F - SQ.FT. AT 75 DEGREES F MEAN TEMPERATURE WITH A MAXIMUM FLAME SPREAD RATING OF 25 AND SMOKE DEVELOPED RATING OF 50. FLEXIBLE FIBERGLASS DUCT SHALL BE OWENS-CORNING VALUFLEX OR APPROVED SIMILAR.

1. FLEXIBLE FIBERGLASS DUCT SHALL BE PROVIDED WITH SPIN-IN BELLMOUTH FITTING, VOLUME DAMPER AND STAINLESS STEEL CLAMP.
2. FLEXIBLE FIBERGLASS DUCT SIZE SHALL BE SAME AS AIR DEVICE NECK SIZE UNLESS OTHERWISE NOTED.
3. FLEXIBLE FIBERGLASS DUCT LENGTH SHALL BE A MAXIMUM OF 5 FEET IN LENGTH.
4. FLEXIBLE DUCT SHALL BE USED FOR CONNECTION OF SUPPLY AIR DEVICES ONLY. ALL EXHAUST AND RETURN DUCTWORK SHALL BE RIGID DUCTWORK.
5. PROVIDE MANUAL VOLUME DAMPERS IN BRANCH DUCTS TO ALL AIR DEVICES.

7. DUCTWORK INSULATION

ASTM C553, TYPE I, CLASS B-5, 0.75 PCF NOMINAL CONDUCTIVITY (K) IS APPROXIMATELY 0.17 (BTU-INHR-SF-°F) AT 75 DEGREES F. .002 FOIL SCRIM FACING FOR DUCT SYSTEMS WITH INTEGRAL VAPOR BARRIER. INSTALL PER MANUFACTURER'S INSTRUCTIONS WITH PINS, PRESSURE SENSITIVE TAPE AND MASTIC. APPLY TO ALL SUPPLY, RETURN AND OUTSIDE AIR DUCTWORK - 2" THICK MINIMUM FOR AN INSTALLED R VALUE OF 6.0.

8. PACKAGED DX UNIT

A. MANUFACTURED UNITS

1. PROVIDE ROOF-MOUNTED UNITS HAVING ELECTRIC REFRIGERATION.
2. UNIT SHALL BE SELF-CONTAINED, PACKAGED, FACTORY ASSEMBLED AND PREWIRED, CONSISTING OF CABINET AND FRAME, FACTORY PREFABRICATED EQUIPMENT SUPPORT CURB, SUPPLY FAN, CONTROLS, AIR FILTERS, REFRIGERANT, COOLING COIL, COMPRESSOR, HEATER, CONDENSER COIL AND CONDENSER FAN. PROVIDE WITH CONDENSER COIL GUARD AND FACTORY ROOF CURB.
3. THE UNITS SHALL BE DEDICATED DOWN AIRFLOW. THE OPERATING RANGE SHALL BE BETWEEN 115°F AND 0°F IN COOLING AS STANDARD FROM THE FACTORY FOR ALL UNITS. COOLING PERFORMANCE SHALL BE RATED IN ACCORDANCE WITH ARI TESTING PROCEDURES. ALL UNITS SHALL BE FACTORY ASSEMBLED, INTERNALLY WIRED, FULLY CHARGED WITH R-410a AND 100% RUN TESTED TO CHECK COOLING AND HEATING OPERATION, FAN AND BLOWER ROTATION AND CONTROL SEQUENCE BEFORE LEAVING THE FACTORY. WIRING INTERNAL TO THE UNIT SHALL BE COLORED AND NUMBERED FOR IDENTIFICATION. UNITS SHALL BE UL LISTED AND LABELED.

B. UNIT CASING SHALL BE CONSTRUCTED OF ZINC COATED, HEAVY GAUGE, GALVANIZED STEEL. ALL COMPONENTS SHALL BE MOUNTED IN A WEATHER RESISTANT STEEL CABINET WITH A PAINTED EXTERIOR. CABINET CONSTRUCTION SHALL ALLOW FOR ALL MAINTENANCE ON ONE SIDE OF THE UNIT. SERVICE PANELS SHALL HAVE LIFTING HANDLES AND SHALL BE REMOVED AND REINSTALLED BY REMOVING NOT MORE THAN THREE SCREWS WHILE PROVIDING A WATER AND AIR TIGHT SEAL. THE INDOOR AIR SECTION SHALL BE COMPLETELY INSULATED WITH FIRE RESISTANT, PERMANENT, ODORLESS GLASS FIBER MATERIAL. THE BASE OF THE UNIT SHALL HAVE PROVISIONS FOR FORKLIFT AND CRANE LIFTING.

C. EACH REFRIGERANT CIRCUIT SHALL HAVE THERMAL EXPANSION VALVE, SERVICE PRESSURE PORTS AND REFRIGERANT LINE FILTER DRYERS FACTORY-INSTALLED AS STANDARD.

D. UNIT SHALL BE COMPLETELY FACTORY WIRED WITH NECESSARY CONTROLS AND CONTACTOR PRESSURE LUGS OR TERMINAL BLOCK FOR POWER WIRING. UNITS SHALL PROVIDED WITH A FACTORY MOUNTED DISCONNECT AND A GFCI CONVENIENCE OUTLET WITH STEP-DOWN TRANSFORMER MOUNTED IN A WEATHERPROOF ENCLOSURE. OUTLET SHALL REMAIN POWERED WHEN MAIN UNIT DISCONNECT IS OFF. MICROPROCESSOR CONTROLS SHALL BE PROVIDED FOR ALL CONTROL FUNCTIONS. THE RESIDENT CONTROL ALGORITHMS SHALL MAKE ALL HEATING, COOLING AND/OR VENTILATION DECISIONS IN RESPONSE TO ELECTRONIC SIGNALS FROM SENSORS MEASURING INDOOR AND OUTDOOR TEMPERATURES. THE CONTROL ALGORITHM SHALL MAINTAIN ACCURATE TEMPERATURE CONTROL, MINIMIZE DRIFT FROM SET POINT AND PROVIDE BUILDING COMFORT. A CENTRALIZED MICROPROCESSOR SHALL PROVIDE ANTI-SHORT CYCLE TIMING AND TIME DELAY BETWEEN COMPRESSORS TO PROVIDE A HIGHER LEVEL OF MACHINE PROTECTION.

E. ELECTRIC HEATER ELEMENTS SHALL BE CONSTRUCTED OF HEAVY-DUTY NICKEL CHROMIUM ELEMENTS INTERNALLY DELTA CONNECTED FOR 240 VOLT, WYE CONNECTED FOR 480 VOLT. CAPACITY MODULATION SHALL BE ACHIEVED THROUGH THE USE OF PULSE WIDTH MODULATION OR SCR CONTROL. EACH HEATER PACKAGE SHALL HAVE AUTOMATICALLY RESET HIGH LIMIT CONTROL OPERATING THROUGH HEATING ELEMENT CONTACTORS. ALL HEATERS SHALL BE INDIVIDUALLY FUSED FROM FACTORY AND SHALL MEET ALL NEC AND LOCAL CODE REQUIREMENTS. POWER ASSEMBLIES SHALL PROVIDE SINGLE-POINT CONNECTION. ELECTRIC HEAT MODULES SHALL BE UL LISTED.

F. COORDINATE AND VERIFY THAT ROOF IS READY TO RECEIVE WORK AND OPENING DIMENSIONS ARE AS INDICATED ON SHOP DRAWINGS.

G. INSTALL IN ACCORDANCE WITH MANUFACTURER'S INSTRUCTIONS AND ALL APPLICABLE CODES AND STANDARDS AS REQUIRED AT THE PROJECT LOCATION.

H. MOUNT UNIT ON FACTORY PRE MANUFACTURED EQUIPMENT CURB. INSTALL UNIT LEVEL.

I. MANUFACTURER SHALL FURNISH A FACTORY-TRAINED SERVICE ENGINEER WITHOUT ADDITIONAL CHARGE TO PREPARE THE MACHINE FOR OPERATION, START THE UNIT AND CERTIFY INITIAL FIELD STARTUP. THE MANUFACTURER SHALL PROVIDE A WRITTEN CERTIFICATION TO THE ARCHITECT/ENGINEER THAT THE UNIT HAS BEEN PREPARED AND READY FOR OPERATION.

J. INSTALL UNIT WITH PROGRAMMABLE 7-DAY THERMOSTAT CAPABLE OF AUTOMATIC HEAT / COOL CHANGEOVER, ADJUSTABLE DEAD-BAND, INSULATED MOUNTING BASE, LOCKABLE PROTECTIVE COVER, 24V POWER WITH BATTERY BACKUP TO PRESERVE PROGRAM. MOUNT THERMOSTAT LEVEL AND PER THE ARCHITECT'S INTERIOR FINISH ELEVATIONS.

9. TEST AND BALANCE

TEST AND BALANCE CONTRACTOR SHALL BE CERTIFIED BY AABC OR NEBB. SUBMIT TAB QUALIFICATIONS AND SAMPLE REPORT FORMS FOR APPROVAL BY THE ENGINEER. SUBMIT TAB REPORT TO ENGINEER FOR REVIEW. UPON REQUEST, TAB CONTRACTOR SHALL DEMONSTRATE ON-SITE CONFIRMATION OF THE TAB REPORT MEASUREMENTS WITNESSED BY THE ENGINEER. DISCREPANCIES WILL REQUIRE ADDITIONAL TAB SAMPLING AND RE-BALANCE OF THE SYSTEMS.

ADJUST ALL SYSTEM COMPONENTS, EQUIPMENT, FLOW DEVICES AND SENSORS PER "AABC NATIONAL STANDARDS FOR TOTAL SYSTEM BALANCE, V 2002".

PROVIDE BELT AND SHEAVE CHANGES AS REQUIRED FOR BALANCING OF ALL FANS INDICATED ON THESE DRAWINGS. BELT AND SHEAVE CHANGES SHALL BE PROVIDED AT THE CONTRACTOR'S EXPENSE.

10. AIR DEVICES

FURNISH AS SCHEDULED OR OBTAIN PRIOR APPROVAL TO SUBMIT AN ALTERNATE MANUFACTURER / MODEL.

DEVICE SHALL BE OF ALUMINUM CONSTRUCTION, WITH BAKED WHITE ENAMEL FINISH UNLESS OTHERWISE STATED. FURNISH DEVICE WITH ACCESSORIES SCHEDULED, INCLUDING PLASTER TRIM RING FOR HARD CEILING INSTALLATION. UL-LISTED FIRE RADIATION DAMPER FOR RATED PARTITION INSTALLATIONS. OPPOSED-BLADE OR BUTTERFLY (ROUND-ONLY) DAMPERS MAY BE INSTALLED ONLY WHEN BRANCH TAKE-OFF VOLUME DAMPERS CANNOT BE INSTALLED AND ONLY WITH PRIOR APPROVAL BY THE ENGINEER. INSTALL INSULATION ON BACK PANELS FOR ALL CEILING SUPPLY GRILLES. PLENUMS SHALL BE CONSTRUCTED TO SMACNA STANDARDS FOR DUCT RIGIDITY AND SEAL, LINED WITH 1" CERTAINTEED TOUGHGUARD LINER BOARD INSTALLED PER MANUFACTURES DIRECTIONS AND FINISHED BLACK.

11. UNIT HEATERS

HEATER SHALL BE CONSTRUCTED OF POWDER COATED 18 GA. WELDED STEEL WITH LATCHED ACCESS DOOR. HEATING ELEMENT SHALL BE COPPER CLAD STEEL SHEATH ELEMENT WITH CONTINUOUSLY BRAZED STEEL FINS. HEATER SHALL HAVE AN AUTOMATIC OVER-TEMPERATURE SAFETY. HEATER SHALL HAVE A LOUVERED DISCHARGE FACE AND INTEGRAL THERMOSTAT SUITABLE FOR FREEZE PROTECTION AT A THERMOSTAT SETTING OF 45 DEG F.

genesis engineering group, llc.
2601 cattlemen rd., suite 307
sarasota, fl. 34232
project #24-080
genesis
www.gmeng.net

SEAL:

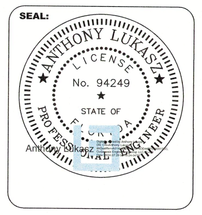

THIS ITEM HAS BEEN ELECTRONICALLY SIGNED AND SEALED BY ANTHONY LUKASZ, PE, ON THE DATE ADJACENT TO THE SEAL USING A SHA AUTHENTICATION CODE. PRINTED COPIES OF THIS DOCUMENT ARE NOT CONSIDERED SIGNED AND SEALED AND THE SHA AUTHENTICATION CODE MUST BE VERIFIED ON ANY ELECTRONIC COPIES.

BRISTA HOMES
3413 DEL GONDOLA, LAKEWOOD RANCH, FL 34211
941.373.0500 BRISTAHOMES.COM

BRISTA COMMONS, BUILDING TWO
3120 - 3150 GULF OF MEXICO DRIVE
LONGBOAT KEY, FLORIDA

NO.	REVISION	DATE

DATE:	07/15/24
JOB NUMBER:	24-080
FILE NAME:	
DRAWN BY:	RPM
CHECKED BY:	TL
DRAWING TITLE:	SPECIFICATIONS - MECHANICAL

RECEIVED
AUG 28 2024
TOWN OF LONGBOAT KEY
Planning, Zoning & Building

NEW HVAC SPECIFICATIONS

SCALE: AS NOTED

DRAWING NO.
M-2

PIPING ELEMENTS / VALVING

- PRESSURE REDUCING VALVE (PRV)
- GATE VALVE
- GLOBE VALVE
- PLUG VALVE
- BUTTERFLY VALVE
- VALVE IN RISE OR DROP
- BALL VALVE
- SWING CHECK VALVE
- LIFT CHECK VALVE
- GATE VALVE, ANGLE
- GLOBE VALVE, ANGLE
- THREE WAY CONTROL VALVE
- TWO WAY CONTROL VALVE
- SOLENOID VALVE
- TEMPERATURE AND PRESSURE RELIEF VALVE
- RELIEF/SAFETY VALVE
- GAS COCK
- GAS PRESSURE REGULATOR
- STRAINER
- STRAINER WITH BLOW OFF VALVE
- FLEXIBLE-CONNECTION
- SPRINKLER HEAD
- PIPE RISING UP
- PIPE DROPPING DOWN
- UNION - SCREWED OR FLANGED
- FS — FLOW SWITCH
- TT — TEMPERATURE TRANSMITTER
- PT/PS — PRESSURE TRANSMITTER OR PRESSURE SWITCH
- TH/TI — THERMOMETER/TEMPERATURE INDICATOR
- PI/GA — GAUGE WITH GAUGE COCK/ PRESSURE INDICATOR
- BACKFLOW PREVENTOR (REDUCED PRESSURE ZONE)
- BACKFLOW PREVENTOR (DOUBLE CHECK VALVE ASSEMBLY)
- SA — WATER HAMMER ARRESTER
- CBV — CIRCUIT SETTING BALANCING VALVE
- HB — HOSE BIBB
- RD — ROOF DRAIN
- OS — OPEN SITE DRAIN
- FD — FLOOR DRAIN
- ADR — AREA DRAIN
- CO — CLEANOUT
- FLOOR CLEANOUT
- WCO — WALL CLEAN OUT

PLUMBING SYMBOL LEGEND

SYMBOL	DESCRIPTION
	- EXISTING PIPING TO BE REMOVED
	- DOMESTIC COLD WATER PIPING (CW)
	- DOMESTIC HOT WATER PIPING (HW)
	- DOMESTIC HOT WATER CIRCULATION PIPING (HWC)
CD	- CONDENSATE PIPING (CD) ABOVE FLOOR
CD	- CONDENSATE PIPING (CD) BELOW FLOOR
PD	- PUMP DISCHARGE PIPING (PD) ABOVE FLOOR
PD	- PUMP DISCHARGE PIPING (PD) BELOW FLOOR
SS	- SANITARY SEWER PIPING (SS) ABOVE FLOOR
SS	- SANITARY SEWER PIPING (SS) BELOW FLOOR
GW	- GREASE WASTE PIPING (GW) ABOVE FLOOR
GW	- GREASE WASTE PIPING (GW) BELOW FLOOR
V	- SANITARY VENT PIPING (V)
G	- LOW PRESSURE GAS PIPING (G)
MG	- MEDIUM PRESSURE GAS PIPING (MG)
SD	- STORM DRAIN
SD	- STORM DRAIN BELOW FLOOR
OSD	- OVERFLOW STORM DRAIN
	- POINT OF DEMOLITION EXTENTS
	- POINT OF CONNECTION TO EXISTING
1 / P-1	- ENLARGED PLAN REFERENCE: TOP-PLAN#, BOTTOM-DRAWING# SHOWN ON

PLUMBING ABBREVIATIONS

SYMBOL	DESCRIPTION	SYMBOL	DESCRIPTION
A/C	- ABOVE CEILING	HWC	- DOMESTIC HOT WATER CIRCULATION
AFF	- ABOVE FINISH FLOOR	HWR	- DOMESTIC HOT WATER RETURN
AP	- ACCESS PANEL	IE	- INVERT ELEVATION
BFF	- BELOW FINISHED FLOOR	KW	- KILOWATT
CD	- CONDENSATE DRAIN	LBS	- POUNDS
CFH	- CUBIC FEET PER HOUR	MG	- MEDIUM PRESSURE GAS
CPVC	- CHLORINATED POLYVINYL CHLORIDE PIPE	NTS	- NOT TO SCALE
CO	- CLEANOUT	OSD	- OVERFLOW STORM DRAIN
CONT	- CONTINUATION	PD	- PUMP DISCHARGE
CW	- DOMESTIC COLD WATER	PSI	- POUNDS PER SQUARE INCH
DN	- DOWN	PVC	- POLYVINYL CHLORIDE PIPE
DWG	- DRAWING	RPBP	- REDUCED PRESSURE BACKFLOW PREVENTER
(E)	- EXISTING	SD	- STORM DRAIN
°F	- DEGREE FAHRENHEIT	SS	- SANITARY SEWER
FCO	- FLOOR CLEANOUT	SF	- SQUARE FEET
FD	- FLOOR DRAIN	UNO	- UNLESS NOTED OTHERWISE
G	- GAS	V	- VENT
GPM	- GALLONS PER MINUTE	VTR	- VENT THRU ROOF
HW	- DOMESTIC HOT WATER	WCO	- WALL CLEANOUT

PLUMBING GENERAL NOTES

1. DO NOT SCALE FROM THESE DRAWINGS. EXACT DIMENSIONS SHALL BE TAKEN FROM ARCHITECTURAL DRAWINGS.
2. ALL INDICATED WORK SHALL BE PERFORMED BY THE PLUMBING CONTRACTOR UNLESS OTHERWISE NOTED.
3. ALL WORK SHALL BE INSTALLED IN ACCORDANCE WITH THE REQUIREMENTS OF ALL APPLICABLE CODES AND REGULATIONS INCLUDING BUT NOT LIMITED TO NATIONAL, CITY, STATE, AND LOCAL ORDINANCES WHICH MAY BE IN EFFECT. ALL PLUMBING MATERIALS, INSTALLATION PROCEDURES, AND SYSTEM LAYOUTS SHALL BE APPROVED BY ALL APPLICABLE CODE ENFORCEMENT AUTHORITIES HAVING JURISDICTION. IT SHALL BE THE PLUMBING CONTRACTOR'S RESPONSIBILITY TO PAY FOR ALL NECESSARY PERMITS AND APPROVALS FOR THIS INSTALLATION.
4. IT IS THE RESPONSIBILITY OF THE PLUMBING CONTRACTOR TO REVIEW THESE PLANS AND SPECIFICATIONS, AS WELL AS THE RELATED HVAC, FIRE PROTECTION, ELECTRICAL, STRUCTURAL, ARCHITECTURAL, INTERIOR DECOR, AND CIVIL ENGINEERING DRAWINGS TO BECOME FAMILIAR WITH THE FULL PROJECT SCOPE. IN ADDITION, THIS CONTRACTOR MUST COORDINATE WITH AN OWNER REPRESENTATIVE TO FULLY UNDERSTAND ALL REQUIREMENTS WHICH MAY NOT BE SPECIFIED HEREIN AND WHICH THE OWNER MAY CONSIDER PART OF THIS CONTRACT. DURING THE COURSE OF CONSTRUCTION COORDINATION AND ACTUAL CONSTRUCTION, IT IS THE RESPONSIBILITY OF THE PLUMBING CONTRACTOR TO WORK CLOSELY WITH ALL ACCOMPANYING CONTRACTORS AND TRADESMEN IN ORDER TO ENSURE A SMOOTH RUNNING AND CAREFULLY COORDINATED INSTALLATION.
5. ANY DISCREPANCIES OR INADEQUACIES WITHIN THESE BID DOCUMENTS OR BETWEEN THESE BID DOCUMENTS AND THE RELATED HVAC, FIRE PROTECTION, ELECTRICAL, STRUCTURAL, ARCHITECTURAL, INTERIOR DECOR, AND CIVIL ENGINEERING DRAWINGS, OR BETWEEN THESE BID DOCUMENTS AND FIELD CONDITIONS, MUST BE BROUGHT TO THE ATTENTION OF THE OWNER, ARCHITECT, AND ENGINEER PRIOR TO BID SUBMISSION.
6. THE PLUMBING CONTRACTOR MUST VISIT THE SITE AND NOTE ALL EXISTING CONDITIONS AS WELL AS CONDITIONS TO BE MET PRIOR TO BID SUBMISSION. LACK OF A THOROUGH UNDERSTANDING OF THE PROJECT SCOPE AND CONDITIONS SHALL NOT CONSTITUTE AN EXCUSE FOR ERRORS OR OMISSIONS, NOR FOR A REQUEST FOR EXTRA COMPENSATION.
7. IT IS CRITICAL THAT THE PLUMBING CONTRACTOR FIELD VERIFIES ALL EXISTING INVERT ELEVATIONS PRIOR TO BID SUBMISSION. IF ANY CONFLICTS EXIST BETWEEN THE NEW PLUMBING SYSTEMS AND THE EXISTING SITE LEVEL SYSTEMS, THEY SHALL BE BROUGHT TO THE ATTENTION OF AN OWNER'S REPRESENTATIVE AND THE ENGINEER PRIOR TO BID SUBMISSION. EXTRA COMPENSATION WILL NOT BE GRANTED FOR ANY EXTRA WORK OR MATERIAL WHICH RESULTS FROM AN INABILITY TO MEET THE INVERTS OF THE EXISTING SITE LEVEL PIPING SYSTEMS.
8. THE PLUMBING CONTRACTOR SHALL PROVIDE A COMPLETE SET OF RECORD "AS-BUILT" DRAWINGS INDICATING THE PRECISE LOCATION OF ALL SYSTEMS, EQUIPMENT CONCEALED OR EMBEDDED PIPING, PIPING CONNECTIONS, AND ACCESS DOORS. THESE DRAWINGS SHALL ALSO INCLUDE ALL CHANGES AND DEVIATIONS FROM THE BID DOCUMENTS.
9. RUN ALL DOMESTIC WATER, WASTE, VENT, AND GAS PIPING AS HIGH AS POSSIBLE THROUGHOUT THE ENTIRE BUILDING. INSTALL LONG RUNS OF PIPING WITHIN STRUCTURAL FRAMING SPACE AND OTHER PIPING TIGHT TO BOTTOM OF STRUCTURE. COORDINATE AND VERIFY WITH OTHER CONTRACTORS AS TO NOT INTERFERE WITH DUCTWORK, FIRE PROTECTION PIPING, LIGHTING SYSTEMS, ETC.
10. ALL EXPOSED HORIZONTAL AND VERTICAL PIPING SHALL BE INSTALLED IN A NEAT ARRANGEMENT IN LOCATIONS WHICH ARE THE MOST INCONSPICUOUS. VERTICAL DROPS SHALL BE KEPT TO AN ABSOLUTE MINIMUM AND THEIR FINAL LOCATIONS SHALL BE COORDINATED AND RUN WITHIN CHASES, WALLS, AND SOFFITS WITH OTHER MECHANICAL / ELECTRICAL FEEDS. ALL SUCH LOCATIONS SHALL BE REVIEWED WITH AN OWNER'S REPRESENTATIVE AND ARCHITECT PRIOR TO INSTALLATION.
11. FINAL CONNECTIONS TO ALL GAS FIRED EQUIPMENT SHALL BE BY THE PLUMBING CONTRACTOR, REGARDLESS OF WHO PROVIDES EQUIPMENT. THIS SHALL INCLUDE BUT NOT BE LIMITED TO HVAC EQUIPMENT, WATER HEATERS, APPLIANCES, ETC.
12. ALL DOMESTIC WATER BRANCH LINES SHALL HAVE THEIR OWN RESPECTIVE SHUTOFF VALVES WHETHER OR NOT SHOWN ON THE DRAWINGS.
13. DOMESTIC WATER HEATER TEMPERATURE / PRESSURE RELIEF VALVES SHALL BE PIPED FULL SIZE TO THE NEAREST APPROVED FLOOR DRAIN, MOP SINK, OR LANDSCAPE AT EXTERIOR. THIS REQUIREMENT SHALL BE APPLICABLE TO ALL DOMESTIC WATER HEATING STORAGE VESSELS. INSTANTANEOUS WATER HEATERS NOT STORING WATER SHALL NOT REQUIRE TEMPERATURE OR PRESSURE RELIEF VALVES.
14. THE PLUMBING CONTRACTOR SHALL RUN OUT ALL BUILDING DRAINAGE AND WASTE LINES WHERE SHOWN ON THE DRAWINGS AND MAKE ALL CONNECTIONS TO SITE LEVEL SYSTEMS.
15. ALL EXPOSED PIPING BELOW LAVATORY'S DESIGNATED AS ADA ACCESSIBLE SHALL BE TOTALLY INSULATED.
16. ALL ROOF DRAIN SUMPS AND HORIZONTAL STORM DRAINAGE PIPING LOCATED ABOVE CEILINGS SHALL BE FULLY INSULATED INCLUDING ALL FITTINGS.
17. ALL NON-DRAINAGE PIPING SHALL BE RUN LEVEL AND GENERALLY FREE OF TRAPS AND UNNECESSARY BENDS, ARRANGED TO CONFORM TO THE BUILDING REQUIREMENTS, AND TO SUIT THE NECESSITIES OF CLEARANCES FOR OTHER MECHANICAL WORK. PROVIDE VALVED DRAINAGE OUTLETS IN AREAS OF PIPING WHICH WOULD BE UNDRAINABLE DURING MAINTENANCE OR REPAIRS.
18. ALL REQUIRED OFFSETS, RISES, AND DROPS DUE TO POSSIBLE OBSTRUCTIONS OF PIPE RUNS ARE NOT NECESSARILY SHOWN. PLUMBING CONTRACTOR SHALL PROVIDE ALL REQUIRED OFFSETS NECESSARY FOR FINAL COORDINATION WITH OTHER TRADES AND STRUCTURE.
19. THROUGH PENETRATIONS OF FIRE RESISTANCE RATED HORIZONTAL ASSEMBLIES SHALL BE PROTECTED BY AN APPROVED THROUGH-PENETRATION FIRESTOP SYSTEM INSTALLED AND TESTED IN ACCORDANCE WITH ASTM E 814 OR UL 1479, WITH A MINIMUM POSITIVE PRESSURE DIFFERENTIAL OF 0.01 INCH OF WATER (2.49 PA). THE SYSTEM SHALL HAVE AN F RATING / T RATING OF NOT LESS THAN 1 HOUR BUT NOT LESS THAN THE REQUIRED RATING OF THE WALL / FLOOR PENETRATED. SEE ARCHITECTURAL DRAWINGS FOR RATED ASSEMBLY LOCATIONS, RATINGS, AND DETAILS.

    EXCEPTIONS:
    A. FLOOR PENETRATIONS CONTAINED AND LOCATED WITHIN THE CAVITY OF A WALL, ABOVE THE FLOOR, OR BELOW THE FLOOR, DO NOT REQUIRE A T RATING.
    B. FLOOR PENETRATIONS BY FLOOR DRAINS, TUB DRAINS, OR SHOWER DRAINS CONTAINED AND LOCATED WITHIN THE CONCEALED SPACE OF A HORIZONTAL ASSEMBLY DO NOT REQUIRE A T RATING.
20. FLUSH LEVERS FOR ACCESSIBLE WATER CLOSETS SHALL BE LOCATED ON THE APPROACH SIDE (WIDE SIDE OF ROOM) OF THE FIXTURE.
21. CLEANOUTS SHALL BE PROVIDED IN ACCORDANCE WITH LOCAL CODE REQUIREMENTS, INCLUDING AT THE BASE OF ALL DRAINAGE STACKS.
22. ALL PLUMBING EQUIPMENT, INSULATION, PIPING, ETC. INSTALLED IN HVAC RETURN AIR PLENUMS SHALL MEET CODE REQUIREMENTS FOR FLAME SPREAD AND SMOKE DEVELOPMENT RATINGS (FLAME 25 / SMOKE 50), WHEN TESTED IN ACCORDANCE WITH ASTM E84 OR UL 273.
23. ALL PLUMBING EQUIPMENT REQUIRING ELECTRICAL POWER SHALL BE INSTALLED WITH DISCONNECT SWITCHES AT EACH PIECE OF EQUIPMENT. COORDINATE SWITCH TYPE (FUSED OR NON-FUSED) WITH ELECTRICAL DRAWINGS.
24. ALL PLUMBING EQUIPMENT SHALL BE INSTALLED ACCORDING TO MANUFACTURER'S REQUIREMENTS. MANUFACTURER RECOMMENDATIONS ARE DEEMED REQUIREMENTS AND SHALL BE FOLLOWED.
25. WATER PIPING ROUTED ABOVE CEILINGS AND IN EXTERIOR WALLS SHALL BE ROUTED ON CONDITIONED SIDE (UNDERSIDE) OF CEILING INSULATION AND CONDITIONED SIDE (INSIDE) OF WALL INSULATION. DO NOT INSTALL PIPING IN LOCATIONS SUBJECT TO FREEZING CONDITIONS.
26. WATER HAMMER ARRESTORS, SIZED PER PDI, SHALL BE PROVIDED ON THE SUPPLY PIPING TO EACH QUICK CLOSING VALVE (E.G. WATER CLOSETS, URINALS, SENSOR OPERATED FAUCETS, ICE MACHINE SUPPLY BOXES, WATER COOLERS, WASHING MACHINE SUPPLY BOXES, DISHWASHERS, ETC). ARRESTORS SHALL BE DOUBLE SEAL PISTON TYPE WITH THREADED CONNECTIONS, LISTED FOR CONCEALED INSTALLATIONS WITHOUT ACCESS PANELS.
27. WHERE REQUIRED FOR ACCESS TO VALVES AND ACCESSORIES ABOVE HARD CEILINGS OR IN WALLS, ACCESS PANELS SHALL BE PROVIDED BY THIS CONTRACTOR. PANELS IN RATED ASSEMBLIES SHALL HAVE LISTED RATINGS EQUAL TO OR GREATER THAN THE ASSEMBLY IN WHICH THEY ARE INSTALLED.
28. ALL VALUE ENGINEERING OR DEVIATIONS FROM THE CONTRACT DOCUMENTS SHALL BE SUBMITTED IN WRITING TO THE DESIGN TEAM FOR REVIEW AND APPROVAL PRIOR TO ACCEPTANCE OR IMPLEMENTATION. ANY COST INCURRED AS A RESULT OF ANY DEVIATIONS FROM THE BASIS OF DESIGN INDICATED IN THE CONTRACT DOCUMENTS (E.G. PLUMBING MODIFICATIONS TO ACCOMMODATE ALTERNATE EQUIPMENT SELECTIONS, DESIGN RELATED EXPENSES FOR REQUIRED DRAWING MODIFICATIONS, ETC.) SHALL BE SOLE RESPONSIBILITY OF THE CONTRACTOR. NO INCREASE IN CONTRACT COST WILL BE GRANTED UNLESS BORNE BY, AND APPROVED IN WRITING BY, THE OWNER. CONTRACT DOCUMENTS ARE DEFINED TO INCLUDE ALL DISCIPLINES AND DIVISIONS OF THE CONTRACT.

genesis engineering group, llc.
2601 cattlemen rd. ste 501
sarasota, fl 34232
project #24-080
genesis
www.genesig.net

SEAL:

ANTHONY LUKASZ — LICENSED — No. 94249 — STATE OF FLORIDA — PROFESSIONAL ENGINEER

THIS ITEM HAS BEEN ELECTRONICALLY SIGNED AND SEALED BY ANTHONY LUKASZ, PE, ON THE DATE ADJACENT TO THE SEAL USING A SHA AUTHENTICATION CODE. PRINTED COPIES OF THIS DOCUMENT ARE NOT CONSIDERED SIGNED AND SEALED AND THE SHA AUTHENTICATION CODE MUST BE VERIFIED ON ANY ELECTRONIC COPIES.

BRISTA HOMES — 941.379.0500 — BRISTAHOMES.COM — 2500 Main St, Sarasota, FL 34237

BRISTA COMMONS, BUILDING TWO
3120 - 3150 GULF OF MEXICO DRIVE
LONGBOAT KEY, FLORIDA

NO.	REVISION	DATE

DATE:	07/15/24
JOB NUMBER:	24-080
FILE NAME:	
DRAWN BY:	RPM
CHECKED BY:	TL
DRAWING TITLE:	GENERAL NOTES - PLUMBING

DRAWING NO.

P-0

RECEIVED
AUG 28 2024
TOWN OF LONGBOAT KEY
Planning, Zoning & Building

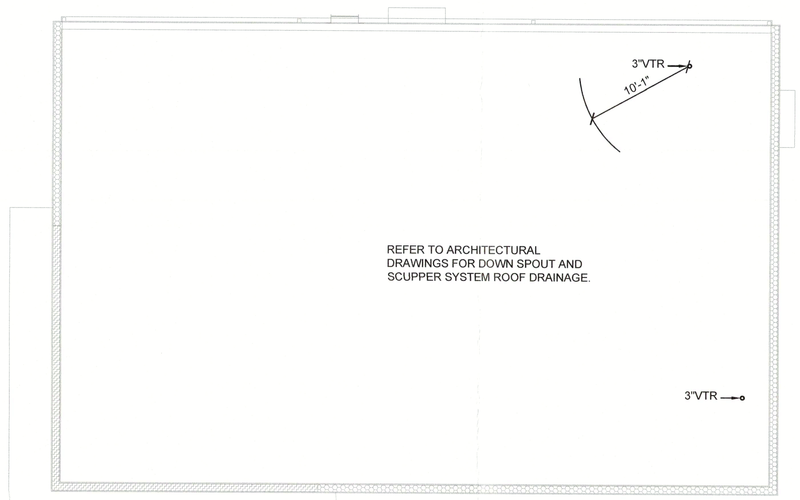

NEW PLUMBING ROOF PLAN
SCALE: 1/8"=1'-0"

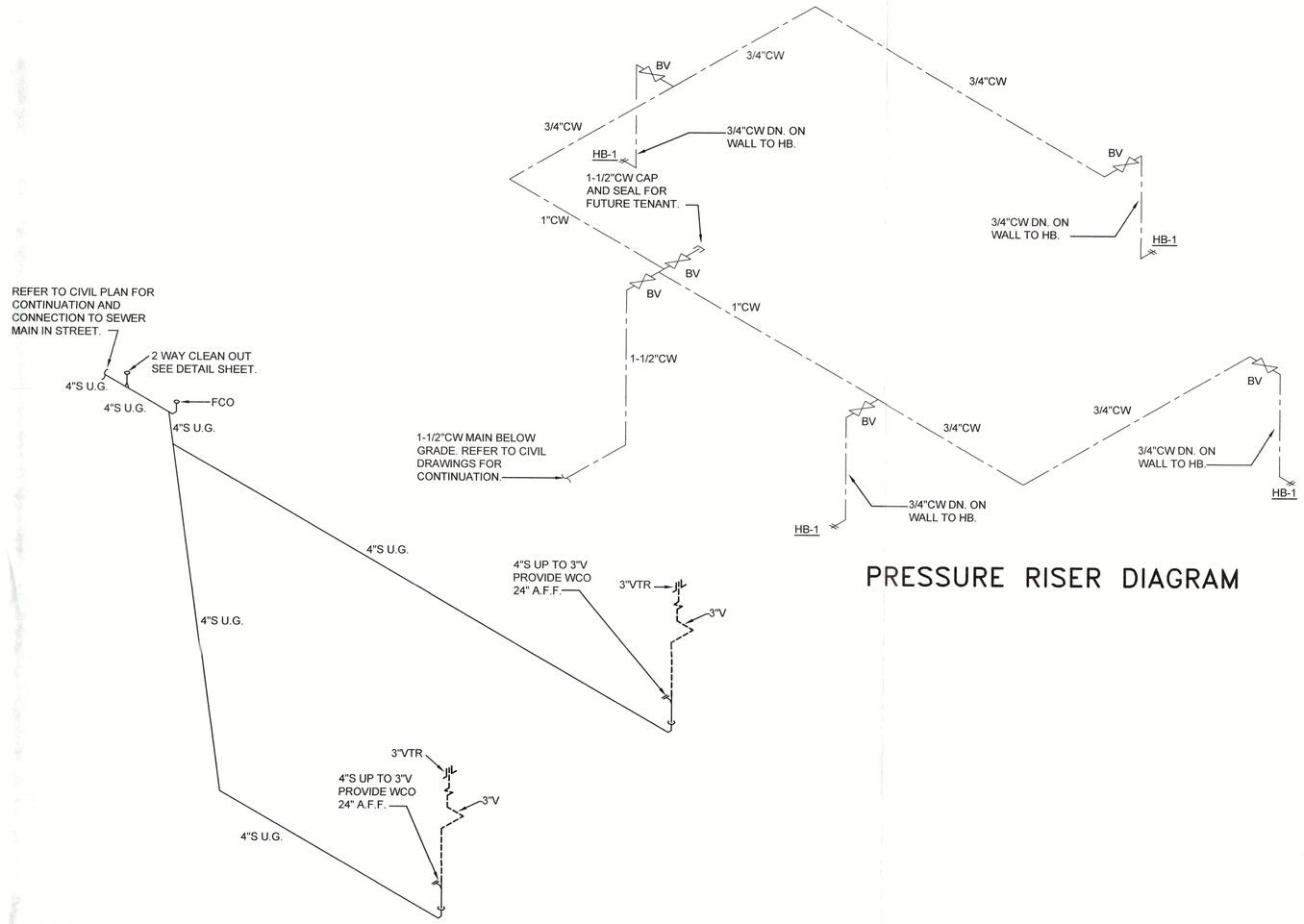

GRAVITY RISER DIAGRAM

PRESSURE RISER DIAGRAM

THIS ITEM HAS BEEN ELECTRONICALLY SIGNED AND SEALED BY ANTHONY LUKASZ, PE. ON THE DATE ADJACENT TO THE SEAL USING A SHA AUTHENTICATION CODE. PRINTED COPIES OF THIS DOCUMENT ARE NOT CONSIDERED SIGNED AND SEALED AND THE SHA AUTHENTICATION CODE MUST BE VERIFIED ON ANY ELECTRONIC COPIES.

PLUMBING RISER DIAGRAMS
SCALE: NO SCALE

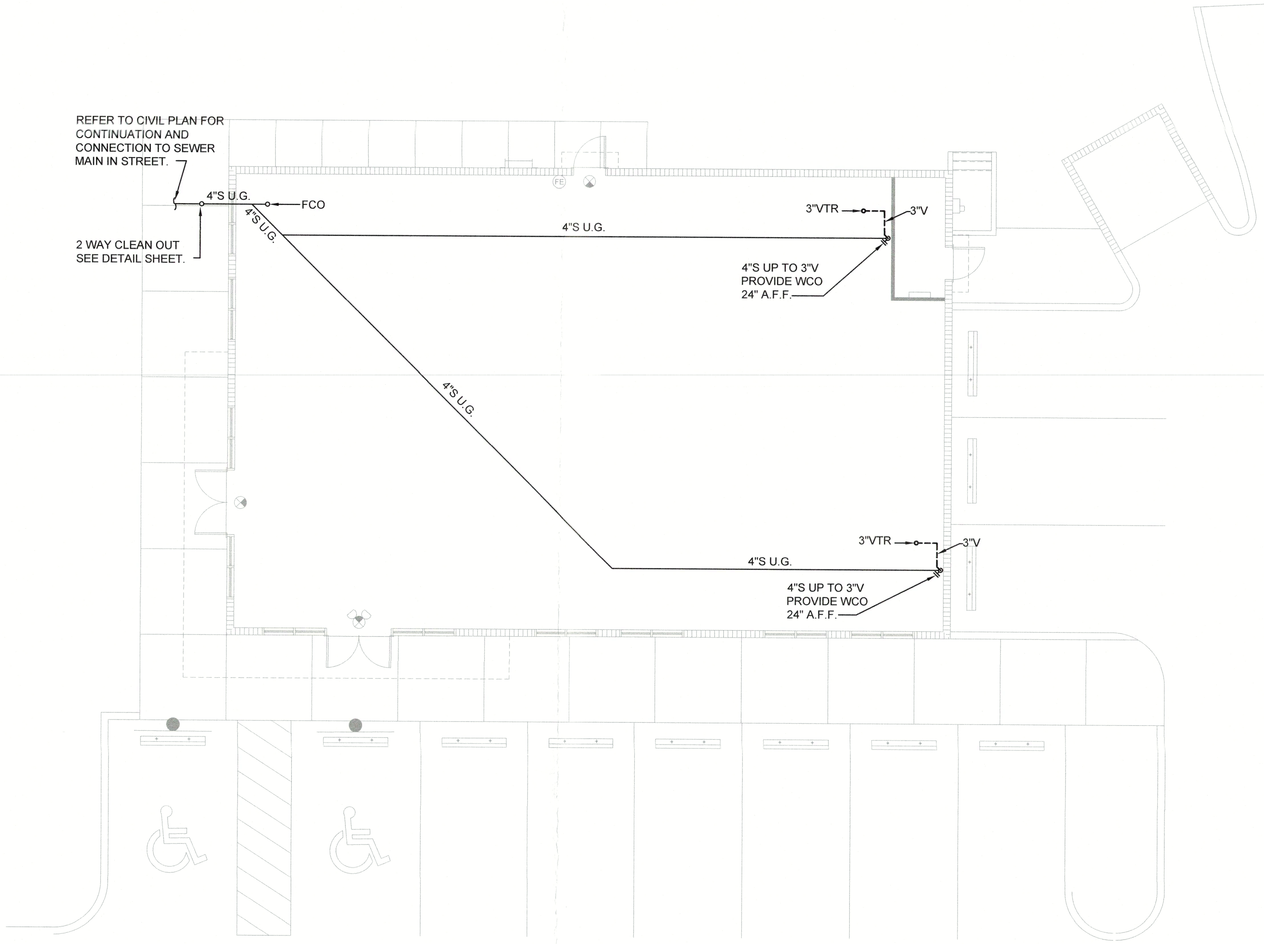

NEW GRAVITY PIPING PLAN
SCALE: 1/8"=1'-0"

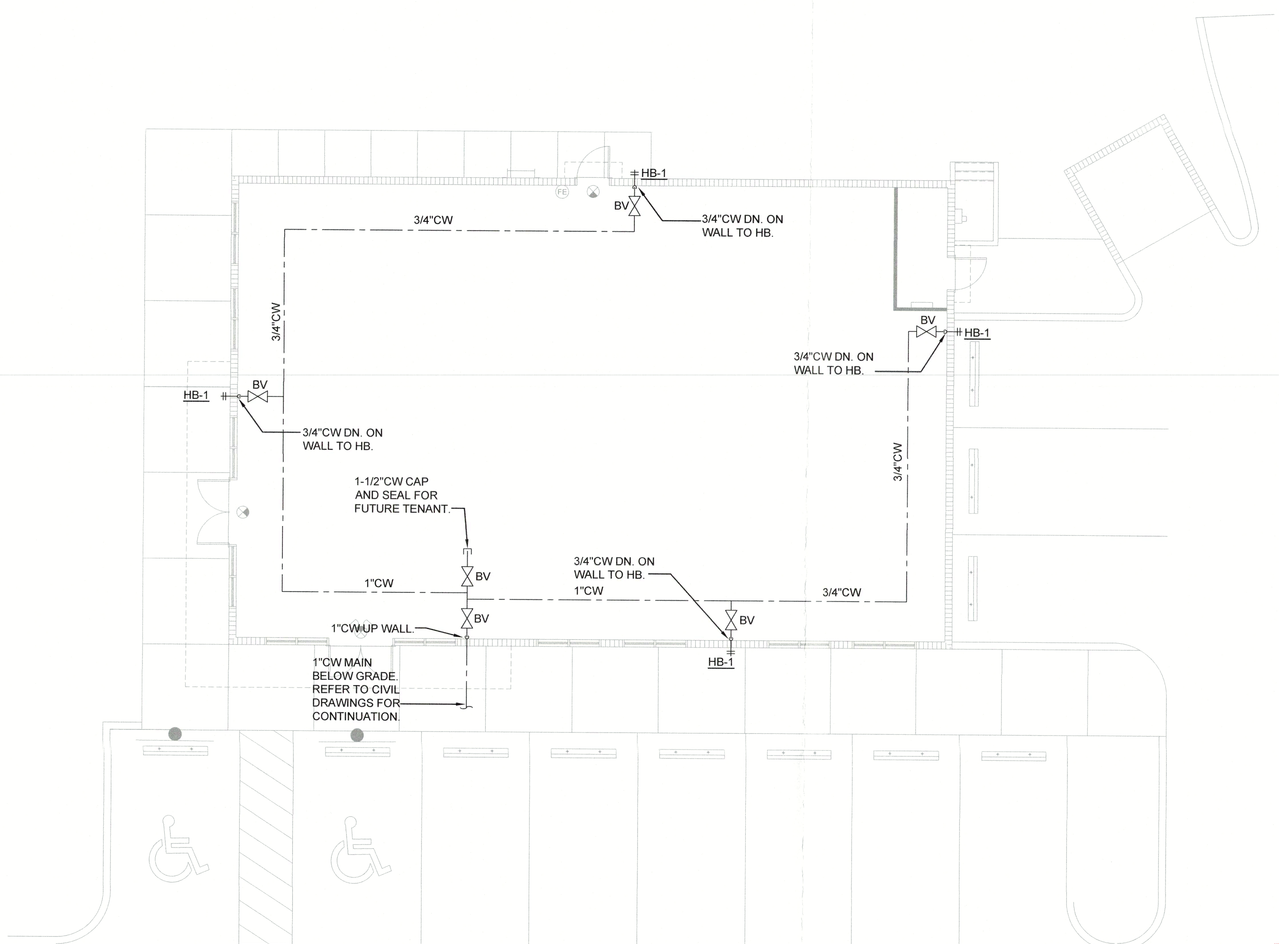

NEW PRESSURE PLAN
SCALE: 1/8"=1'-0"

RECEIVED
AUG 28 2024
TOWN OF LONGBOAT KEY
Planning, Zoning & Building

genesis engineering group, llc.
2601 cattlemen rd., ste 501
sarasota, fl 34232
project #24-080
www.geneng.net

SEAL:
ANTHONY LUKASZ
LICENSE
No. 94249
STATE OF FLORIDA
PROFESSIONAL ENGINEER

BRISTA HOMES
941.373.0500 | BRISTAHOMES.COM

BRISTA COMMONS, BUILDING TWO
3120 - 3150 GULF OF MEXICO DRIVE
LONGBOAT KEY, FLORIDA

NO.	REVISION	DATE

DATE:	07/15/24
JOB NUMBER:	24-080
FILE NAME:	
DRAWN BY:	RPM
CHECKED BY:	TL
DRAWING TITLE:	FLOOR PLANS - PLUMBING

DRAWING NO.
P-1

PLUMBING SPECIFICATIONS

1. GENERAL CONDITIONS: ALL WORK SHALL BE CONSTRUCTED IN ACCORDANCE WITH THE 2023 FLORIDA BUILDING CODE, BUILDING, EIGHTH EDITION, 2023 FLORIDA BUILDING CODE, PLUMBING, EIGHTH EDITION, 2023 FLORIDA BUILDING CODE, FUEL GAS, EIGHTH EDITION, 2023 FLORIDA BUILDING CODE, ENERGY CONSERVATION, EIGHTH EDITION, AND ALL OTHER APPLICABLE LOCAL AND STATE CODES.

   A. MATERIALS: NEW, UNUSED, BEST OF THEIR RESPECTIVE KINDS AND FREE FROM DEFECTS AS INDICATED ON THE DRAWINGS. BASIS OF QUALITY SHALL BE LATEST STANDARDS OF ASTM, ASA, FEDERAL SPECIFICATIONS OR OTHER ACCEPTABLE STANDARDS.

   B. DRAWINGS ARE DIAGRAMMATIC AND INDICATE GENERAL ARRANGEMENT OF WORK. CONTRACTOR SHALL COORDINATE HIS WORK WITH ALL OTHER TRADES. THIS CONTRACTOR SHALL PAY ALL FEES, GIVE ALL NOTICES, FILE ALL NECESSARY DRAWINGS, AND OBTAIN ALL PERMITS AND CERTIFICATES OF APPROVAL REQUIRED IN CONNECTION WITH ALL WORK UNDER THIS CONTRACT. CONTRACTOR SHALL COMPLY WITH ALL NATIONAL AND LOCAL LAWS, ORDINANCES, RULES, REGULATIONS, AND THE CURRENT ENERGY CONSERVATION CODE.

   C. SHOP DRAWINGS SHALL BE SUBMITTED FOR APPROVAL PRIOR TO ORDERING AND INSTALLATION OF ANY MATERIAL. ONE ELECTRONIC COPY OF SUBMITTALS, IN PDF FORMAT, IS REQUIRED. ALL PRODUCTS AND MATERIALS FOR A GIVEN PHASE SHALL BE SUBMITTED AT THE SAME TIME. PARTIAL SUBMITTALS ARE NOT ACCEPTABLE. THE CONTRACTOR SHALL VERIFY WITH THE ARCHITECT FOR ANY PHASING PROCEDURES REQUIRED OF THE CONSTRUCTION WORK.

2. CUTTING AND PATCHING: THE CONTRACTOR SHALL DO ALL CUTTING AND PATCHING REQUIRED TO SATISFACTORILY PERFORM THE CONSTRUCTION WORK. NO STRUCTURAL MEMBER SHALL BE CUT WITHOUT THE PRIOR APPROVAL OF THE STRUCTURAL ENGINEER.

3. DEMOLITION AND/OR REMOVALS: CONTRACTOR SHALL NOT DEMOLISH OR REMOVE FROM PREMISES ANY ITEMS WHICH ARE NOT SPECIFICALLY CALLED FOR BY THE PLUMBING DRAWINGS AND SPECIFICATIONS. SHOULD ANY SUCH ITEMS BE DISCONNECTED, DEMOLISHED, OR REMOVED, THE CONTRACTOR SHALL PROMPTLY, AND PROPERLY, REINSTATE ITEMS TO THE SATISFACTION OF THE OWNER. ANY DAMAGE CAUSED TO THE STRUCTURE AND/OR PROPERTY SHALL BE PROPERLY REPAIRED OR REPLACED BY THE CONTRACTOR AT HIS OWN EXPENSE AND TO THE COMPLETE SATISFACTION OF THE OWNER.

4. WORK INCLUDED: THESE SPECIFICATIONS AND THE ACCOMPANYING DRAWINGS ARE INTENDED TO SECURE THE PROVISION OF ALL MATERIALS AND LABOR NECESSARY FOR ALL PLUMBING WORK AS CALLED FOR HEREIN AND AS INDICATED ON THE DRAWINGS. SYSTEMS SHALL BE COMPLETE, WITH ALL NECESSARY APPURTENANCES AND MINOR AUXILIARIES REQUIRED, TO MAKE EACH SYSTEM COMPLETE AND WORKING IN EVERY RESPECT. ALL WORK DESCRIBED IN THE SPECIFICATIONS AND NOT SHOWN ON THE DRAWINGS OR VICE VERSA SHALL BE FURNISHED IN COMPLETE WORKING ORDER. THE FOLLOWING IS A GENERAL DESCRIPTION OF WORK TO BE PROVIDED AND INSTALLED BY THIS CONTRACTOR:

   A. NEW DOMESTIC HOT & COLD WATER DISTRIBUTION SYSTEM.
   B. NEW SANITARY WASTE AND VENT SYSTEM.
   C. NEW PLUMBING EQUIPMENT, FIXTURES, AND TRIM.
   D. TESTS, ADJUSTMENTS, SHOP AND AS-BUILT DRAWINGS, PERMITS, CERTIFICATES, AND APPROVALS.
   E. PIPE INSULATION ON ALL WATER AND DRAINAGE PIPING AS REQUIRED.
   F. HANGERS AND SUPPORTS, ROUGH CUTTING AND PATCHING.
   G. ALL REQUIRED VALVES, CONTROLS, AND VALVE ACCESS PANELS / DOORS.

5. GENERAL CONSTRUCTION: UNDER NO CIRCUMSTANCES WILL THIS CONTRACTOR OR HIS WORKMEN BE PERMITTED TO USE ANY PART OF THE BUILDING AS A SHOP, EXCEPT PARTS DESIGNATED BY THE OWNER FOR SUCH PURPOSES. STORE MATERIALS ONLY IN SPACES DESIGNATED BY OWNER.

   A. REMOVE RUBBISH FROM PREMISES AS OFTEN AS NECESSARY OR AS DIRECTED BY OWNER.

   B. BEFORE SUBMITTING A PROPOSAL, PROSPECTIVE BIDDERS SHALL VISIT AND CAREFULLY EXAMINE THE SITE TO BECOME FAMILIAR WITH EXISTING CONDITIONS AND WITH THE DIFFICULTIES ASSOCIATED WITH THE EXECUTION OF THIS WORK. SUBMISSION OF A PROPOSAL WILL BE CONSTRUED AS EVIDENCE THAT SUCH AN EXAMINATION HAS BEEN MADE. LATER CLAIMS WILL NOT BE RECOGNIZED FOR EXTRA LABOR, EQUIPMENT, OR MATERIALS REQUIRED BECAUSE OF DIFFICULTIES ENCOUNTERED WHICH COULD HAVE BEEN FORESEEN HAD SUCH AN EXAMINATION BEEN MADE.

   C. FURNISH ADEQUATE LIABILITY INSURANCE AND BONDING AS REQUIRED.

   D. PREPARE AND FURNISH TO THE OWNER CAD GENERATED "AS-BUILT" PLANS FOR ALL WORK INSTALLED.

   E. ALL PARTS OF THE WORK SHALL BE TESTED AND ADJUSTED TO WORK PROPERLY AND BE LEFT IN COMPLETE AND FULLY OPERATING CONDITION. CORRECT DEFECTS DISCLOSED BY THESE TESTS WITHOUT ANY ADDITIONAL COST TO THE OWNER.

6. INSPECTIONS AND TESTS: THE OPERATION OF THE EQUIPMENT AND PIPING INSTALLATION DOES NOT CONSTITUTE AN ACCEPTANCE OF THE WORK BY THE OWNER. THE FINAL ACCEPTANCE SHALL BE MADE AFTER THE CONTRACTOR HAS ADJUSTED PLUMBING SYSTEMS, DEMONSTRATED THAT THEY FULFILL THE REQUIREMENTS OF THE PLANS AND SPECIFICATIONS, AND HAS FURNISHED ALL REQUIRED CERTIFICATES.

   A. UPON COMPLETION OF THE INSTALLATION, THE CONTRACTOR SHALL FURNISH CERTIFICATES OF APPROVAL FROM ALL AUTHORITIES HAVING JURISDICTION. CONTRACTOR SHALL DEMONSTRATE THAT ALL WORK IS COMPLETE AND IN FULLY OPERATING ORDER AND THAT THE ENTIRE INSTALLATION IS FREE FROM ANY PHYSICAL DEFECTS.

   B. CONTRACTOR SHALL ENSURE ALL SYSTEMS ARE TESTED IN FULL ACCORDANCE WITH LOCAL, STATE, AND UTILITY COMPANY REQUIREMENTS.

7. GUARANTEE: CONTRACTOR SHALL GUARANTEE ALL MATERIALS AND WORKMANSHIP FOR A PERIOD OF ONE (1) YEAR FROM THE FINAL DATE OF ACCEPTANCE, IN WRITING.

8. PIPING, FITTINGS, AND JOINTS:

   A. WATER DISTRIBUTION:

      a. UNDERGROUND PIPING 2-1/2" AND LARGER AT SERVICE ENTRIES SHALL BE TYPE K COPPER TUBING WITH BRAZED JOINTS OR CEMENT LINED DUCTILE IRON PIPE WITH RESTRAINED JOINTS. 2" AND SMALLER PIPING BELOW SLAB WITHIN THE BUILDING SHALL BE TYPE K SOFT COPPER TUBING WITH NO JOINTS BELOW THE SLAB.
      b. ABOVE SLAB DOMESTIC WATER PIPING SHALL BE TYPE L COPPER WITH LEAD-FREE SOLDERED JOINTS. EXCEPT AS NOTED, CPVC PIPE AND FITTINGS MAY BE USED FOR DOMESTIC COLD WATER AND LOW TEMPERATURE HOT WATER (120°F OR LESS) SUPPLY AND RETURN PIPING. TYPE L COPPER SHALL BE USED FOR ALL PIPING WITH OPERATING TEMPERATURES OF 140°F OR HIGHER.
      c. 2" AND SMALLER CPVC SHALL BE COPPER TUBE SIZE, SDR-11. 2-1/2" AND LARGER CPVC PIPING AND FITTINGS SHALL BE IPS SCHEDULE 80. CPVC PIPING SHALL BE AS MANUFACTURED BY LUBRIZOL AND SHALL BE EQUAL TO THE FLOWGUARD GOLD AND CORZAN PIPING SYSTEMS. FITTINGS SHALL BE MATCHING CPVC AND SHALL BE SOLVENT WELDED WITH PRIMER AND CPVC SPECIFIC CEMENT. SYSTEM SHALL BE PRESSURE TESTED AT TWO TIMES SYSTEM OPERATING PRESSURE FOR A PERIOD OF 24 HOURS.

   B. SOIL, WASTE, AND VENT PIPING, STORM DRAIN PIPING, AND CONDENSATE PIPING:

      a. SOLID WALL SCHEDULE 40 PVC (ASTM 1784 AND 1785) WITH DWV PATTERN FITTINGS (ASTM 2665) WITH CEMENT JOINTS (ASTM D2564-96A).
      b. EXCEPTION: SOIL, WASTE, AND VENT PIPING, STORM DRAIN PIPING, AND CONDENSATE PIPING ABOVE SLAB IN AIR PLENUMS SHALL BE NO-HUB CAST IRON PIPE AND FITTINGS WITH HEAVY DUTY NO-HUB COUPLINGS (HUSKY OR EQUAL). ALL CAST IRON PIPE AND FITTINGS SHALL BE OF DOMESTIC SOURCE AND BEAR THE CAST IRON SOIL PIPE INSTITUTE (CISPI) TRADEMARK. CPVC PIPING AND FITTINGS MAY BE ALLOWED BY AHJ WITH PROPER DOCUMENTATION FOR INSTALLATION IN RETURN AIR PLENUMS.

   C. NATURAL GAS:

      a. SCHEDULE 40 BLACK STEEL PIPING WITH WROUGHT STEEL FITTINGS ASTM-A53.
      b. 2" AND SMALLER PIPING SHALL HAVE SCREWED JOINTS.
      c. 2-1/2" AND LARGER PIPING SHALL HAVE WELDED JOINTS.

9. PIPE INSTALLATION: LOCATIONS AND SIZES OF EXISTING PIPING ON PLAN ARE APPROXIMATE. EXACT SIZES AND LOCATIONS FOR NEW CONNECTIONS TO ALL EXISTING PIPING SHALL BE VERIFIED IN FIELD BEFORE STARTING WORK.

   A. THE WORD 'PIPING' IN THIS SPECIFICATION REFERS TO ALL PIPE, FITTINGS, NIPPLES, AND VALVES AND SHALL BE CONSIDERED AS SUCH IN THE INSTALLATION.

   B. ALL WATER PIPING SHALL BE RUN LEVEL AND GENERALLY FREE OF TRAPS AND UNNECESSARY BENDS, ARRANGED TO CONFORM TO THE BUILDING REQUIREMENTS, AND TO SUIT THE NECESSITIES OF CLEARANCES FOR OTHER WORK.

   C. ALL HOT AND COLD WATER PIPING SHALL BE SEPARATED BY AT LEAST 6" (CENTER TO CENTER) AND INSTALLED SO THAT THE PIPES DO NOT COME IN CONTACT WITH ONE ANOTHER. WHERE PIPING IS PARALLEL, AMPLE SPACE SHALL BE PROVIDED BETWEEN PIPING FOR THE PROPER THICKNESS OF COVERING AND PROPER OPERATION OF VALVES.

   D. ALL PIPING SHALL HAVE REDUCING FITTINGS WHERE ANY CHANGE IN THE PIPE SIZES OCCUR. NO BUSHINGS WILL BE ALLOWED. NO VALVE STEM SHALL BE INSTALLED BELOW THE CENTERLINE OF THE PIPING IT SERVES.

   E. CONNECTIONS BETWEEN WATER PIPE, FITTINGS, AND EQUIPMENT OF FERROUS AND NON-FERROUS METALS SHALL BE MADE WITH DIELECTRIC INSULATING COUPLINGS.

10. HANGERS AND SUPPORTS: ALL PIPING SHALL BE SUPPORTED FROM THE BUILDING STRUCTURE BY MEANS OF APPROVED HANGERS AND SUPPORTS. PIPING SHALL BE SUPPORTED TO MAINTAIN REQUIRED GRADING AND PITCHING OF LINES, TO PREVENT VIBRATION, TO SECURE PIPING IN PLACE, AND SHALL BE SO ARRANGED AS TO PROVIDE FOR EXPANSION AND CONTRACTION. SUPPORT LOCATIONS AND HANGING METHODS SHALL BE SHOWN ON SHOP DRAWINGS AND APPROVED BY ARCHITECT AND STRUCTURAL ENGINEER BEFORE STARTING WORK. THE SPACING OF HANGERS SHALL BE IN ACCORDANCE WITH PREVAILING CODES.

    A. MALLEABLE IRON BRACKETS OF APPROVED TYPE SHALL BE USED ALONG WALLS. ADDITIONAL HANGERS SHALL BE INSTALLED AT ALL FITTINGS.

    B. PIPING SHALL NOT BE HUNG FROM OTHER PIPING, DUCTWORK, OR CONDUITS OF OTHER TRADES.

    C. HANGERS AND SUPPORTS SHALL BE AS FOLLOWS: BARE HORIZONTAL FERROUS AND NON-FERROUS PIPING SHALL BE HUNG WITH STEEL, ADJUSTABLE-TYPE CLEVIS HANGERS, OR "GANGED" ON SUITABLE TRAPEZE-TYPE SUPPORTS. HANGERS IN CONTACT WITH COPPER SHALL BE COPPER-PLATED. INSERTS, ANCHORS, CLAMPS, ETC., FOR SECURING HANGERS SHALL BE MAINTAINED BY THIS CONTRACTOR IN THE PROPER LOCATIONS DURING ALL PHASES OF CONSTRUCTION.

11. EQUIPMENT CONNECTIONS: CONTRACTOR SHALL FURNISH ALL REQUIRED VALVES, FITTINGS, VACUUM BREAKERS, TRAPS, ETC., NECESSARY FOR THE COMPLETE HOOKUP TO PROVIDE PROPER OPERATION OF EACH PIECE OF EQUIPMENT. IN CONNECTING TO EQUIPMENT, MANUFACTURER'S RECOMMENDATIONS AS TO SIZE AND ARRANGEMENT OF CONNECTIONS SHALL BE FOLLOWED, WITH SIZES SHOWN ON PLANS INSTALLED UP TO EQUIPMENT STOP OR ISOLATION VALVE.

12. VALVES: DOMESTIC HOT AND COLD WATER SHUTOFF VALVES SHALL BE FULL PORT, BRASS, QUARTER TURN, BALL VALVES WITH INJECTION MOLDED BRASS THREAD TO CPVC SOLVENT WELD ADAPTERS. PROVIDE BRASS VALVE TAGS WITH SCHEDULE IDENTIFYING VALVE SERVICE AND LOCATION.

13. INSULATION: PROVIDE PREFORMED FIBERGLASS INSULATION ON ALL HOT, HOT WATER CIRCULATION, AND COLD WATER PIPING (COLD WATER PIPING SHALL HAVE VAPOR BARRIER). VALVES, AND EQUIPMENT. ALL INSULATION, JACKETS, ADHESIVES, ETC., SHALL HAVE A FLAME SPREAD RATING NOT OVER 25 AND A SMOKE DEVELOPED RATING NOT OVER 50. INSULATION 'R' VALUES SHALL BE AS REQUIRED BY PREVAILING CODES AND ENERGY RELATED STANDARDS.

    A. PROVIDE ELASTOMERIC INSULATION ON ALL INTERIOR ROOF DRAIN BODIES, HORIZONTAL STORM WATER PIPING ABOVE SLAB, AND CONDENSATE PIPING, ARMSTRONG AP, OR EQUAL.

    B. FINISHES: EXPOSED PIPE INSULATION SHALL BE VINYL COATED WITH AN EMBOSSED LAMINATE VAPOR BARRIER JACKET. LAPS AND END STRIPS SHALL BE ADHERED WITH INSULDOUSTIC IC-225. CONCEALED PIPE INSULATION SHALL HAVE A WHITE VAPOR BARRIER JACKET SECURED WITH ALUMINUM BANDS. INSULATED PIPE WITHIN MAIN MECHANICAL ROOMS AND SIMILAR AREAS THAT IS BELOW 7'-0" SHALL BE PROVIDED WITH ALUMINUM JACKETS AND BANDS FOR PROTECTION. INSULATION SUPPORT (TO PREVENT COLLAPSE OF INSULATION) SHALL BE PROVIDED BETWEEN PIPING AND PIPE HANGING SHIELDS. RIGID POLYURETHANE FOAM OR NATURAL CORK INSERTS MAY BE USED FOR SUPPORT. ALL PIPE SUPPORT APPARATUS MUST BE MOUNTED ON THE OUTSIDE OF ALL INSULATION.

    C. INSULATION FOR DOMESTIC HOT WATER SUPPLY AND CIRCULATION PIPING SHALL BE 1" THICKNESS FOR 1-1/4" AND SMALLER PIPING AND 1-1/2" THICKNESS FOR 1-1/2" AND LARGER PIPING. INSULATION FOR STORM WATER AND CONDENSATE PIPING SHALL BE 1/2" THICKNESS FOR 1-1/4" AND SMALLER PIPING AND 1" THICKNESS FOR 1-1/2" AND LARGER PIPING. INSULATION VALUES ARE PER 2023 FLORIDA BUILDING CODE, ENERGY COMPLIANCE (8TH EDITION).

    D. PROVIDE PREFORMED INSULATION GUARDS ON ALL EXPOSED PLUMBING ELEMENTS UNDER ADA COMPLIANT LAVS AND SINKS AS REQUIRED BY ADA REQUIREMENTS, TRUEBRO, OR EQUAL.

14. PIPING IDENTIFICATION: ALL PIPING SHALL BE IDENTIFIED WITH SEMI-RIGID PLASTIC PRESSURE-SENSITIVE IDENTIFICATION MARKERS (NOTE: PRESSURE-SENSITIVE VINYL PIPE MARKERS ARE NOT ACCEPTABLE). DIRECTION OF FLOW ARROWS SHALL BE INCLUDED ON EACH MARKER AND SHALL BE IN CONFORMANCE WITH "SCHEME FOR THE IDENTIFICATION OF PIPING SYSTEMS" (ANSI A13.1-1975).

    A. LOCATIONS FOR PIPE MARKERS SHALL BE AS FOLLOWS:

       a. ADJACENT TO EACH VALVE AND FITTING (EXCEPT ON EQUIPMENT).
       b. AT EACH BRANCH AND RISER TAKE-OFF.
       c. AT EACH PIPE PASSAGE THROUGH WALL AND CEILING CONSTRUCTION.
       d. ON ALL HORIZONTAL PIPE RUNS - MARKED EVERY 20'. MARKERS AND BRASS VALVE TAGS AS MANUFACTURED BY SETON NAME PLATE CORP., OR APPROVED EQUAL.

genesis engineering group, llc.
2601 cattlemen rd. sarasota, fl. 34232
project #24-080
genesis
www.gerteg.net

SEAL:

ANTHONY LUKASZ P.E. LICENSE No. 94249 STATE OF FLORIDA

THIS ITEM HAS BEEN ELECTRONICALLY SIGNED AND SEALED BY ANTHONY LUKASZ, PE. ON THE DATE ADJACENT TO THE SEAL USING A SHA AUTHENTICATION CODE. PRINTED COPIES OF THIS DOCUMENT ARE NOT CONSIDERED SIGNED AND SEALED AND THE SHA AUTHENTICATION CODE MUST BE VERIFIED ON ANY ELECTRONIC COPIES.

BRUSTA HOMES
JIM BRUSTA, CGC # 1512
941.371.0500 BRUSTAHOMES.COM

BRISTA COMMONS, BUILDING TWO
3120 - 3150 GULF OF MEXICO DRIVE
LONGBOAT KEY, FLORIDA

NO.	REVISION	DATE

DATE:	07/15/24
JOB NUMBER:	24-080
FILE NAME:	
DRAWN BY:	RPM
CHECKED BY:	TL
DRAWING TITLE:	SPECIFICATIONS - PLUMBING

RECEIVED
AUG 28 2024
TOWN OF LONGBOAT KEY
Planning, Zoning & Building

NEW PLUMBING SPECIFICATIONS
SCALE: AS NOTED

DRAWING NO.
P-2

NPDES
BLDG PERMIT PLANS
FILE
Copy of Record

No.	Drawing Title
FSP-1	Cover Sheet
FSP-2	General Notes
FSP-3	Existing Conditions and ESC Plan
FSP-4 - FSP-5	Erosion and Sediment Control Plan Details
FSP-6	Final Site Plan
FSP-7	Drainage and Grading Plan
FSP-8	Utilities Plan
FSP-9	Signage and Marking Plan
FSP-10	Cross Sections
FSP-11	Site Details
FSP-12 - FSP-13	Drainage and Grading Details
FSP-14	Water Details
FSP-15	Sanitary Details
LP-1 - LP-2	Site Lighting Plan and Details

Final Site Plan and Construction Plan

For

Brista Homes

Section 7, Township 36 South, Range 17 East
Town of Longboat Key, Florida

SR: PL789 - Section: 17030000 - MP: 7.676-7.590

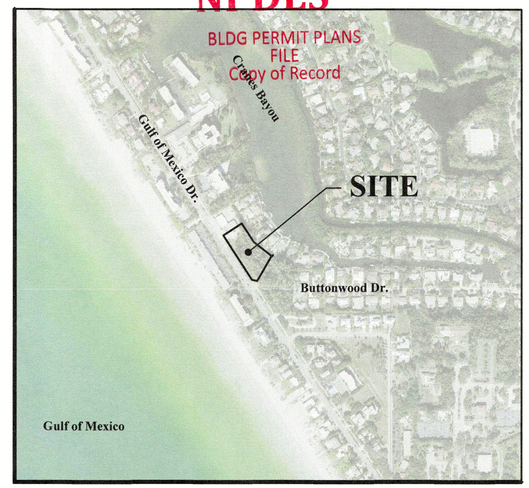

Site Location Map ↑ 0 250 500 Feet

Legal Description:

COMMENCE AT THE 4" X 4" CONCRETE PERMANENT REFERENCE MONUMENT OF LAND SURVEYOR #1195 LOCATED AT THE SOUTHWAST CORNER OF U.S. GOVERNMENT LOT 1, SECTION 7 T36S–R17E, LONGBOAT KEY, SARASOTA COUNTY, FLORIDA; THENCE N 0°11'45" W, 191.82': THENCE S 89°48'15" W, 815.36' TO THE INTERSECTION OF THE NORTH RIGHT OF WAY LINE OF BUTTONWOOD DRIVE AND THE CENTERLINE OF THE PRIVATE ROAD KNOWN AS WINSLOW PLACE, AS SHOWN ON THE UNRECORDED PLAT OF BUTTONWOOD HARBOUR SECTION NO. 2 O.R. BOOK 302, PAGE 51, ET SEQ., PUBLIC RECORDS OF SARASOTA COUNTY, FLORIDA, FOR A POINT OF BEGINNING; THENCE CONTINUE S 89°48'15" W, ALONG THE NORTH RIGHT OF WAY LINE OF SAID SUTTONWOOD DRIVE, 10.00' TO A 4" X 4" CONCRETE MONUMENT ON THE WEST RIGHT OF WAY LINE OF THE PRIVATE ROAD KNOWN AS WINSLOW PLACE: THENCE CONTINUE ALONG SAID NORTH RIGHT OF WAY LINE OF BUTTONWOOD DRIVE ALONG A NONTANGENT CURVE TO THE RIGHT OF RADIUS 1208.28' CENTRAL ANGLE 11°44'07", ARC LENGTH 247.48', CHORD LENGTH 247.05', CHORD BEARING N 84°13'08" W, TO A 4" X 4" CONCRETE MONUMENT AT THE SOUTHWEST CORNER OF SAID BUTTONWOOD HARBOUR SECTION NO. 2; THENCE CONTINUE ALONG SAID NOTH RIGHT OF WAY LINE OF BUTTONWOOD DRIVE ALONG SAID CURVE TO THE RIGHT OF RADIUS 1208.28' CENTRAL ANGLE OF 1°44'25"; ARC LENGTH 36.70', CHORD LENGTH 36.70, CHORD BEARING N 77°28'48W", TO THE NORTHEASTERLY RIGHT OF WAY LINE OF THE 100' IN WIDTH GULF OF MEXICO DRIVE; THENCE N 32°56'54" W, ALONG SAID NORTHEASTERLY RIGH OF WAY LINE 366.70' TO THE NORTHWESTERLY LINE OF LOT 3, BLOCK 8, REVISED PLAT OF BLOCKS 1, 2, 3, 5, 10, 11, 12, 14, 15 & 16, LONGBOAT SHORES, PLAT BOOK 3, PAGE 49, PUBLIC RECORDS OF SARASOTA COUNTY, FLORIDA; THENCE NO 56°58'01" E, ALONG SAID NORTHWESTERLY LINE OF LOT 3, WHICH LINE PASSES ALONG THE SOUTHEASTERLY WALL OF THE EXISTING MASONRY BUILDING SITUATE ON LOT 4 OF SIAD BUTTONWOOD HARBOUR SECTION NO. 2; THENCE S 32°56'54" E ALONG SAID SOUTHEWESTERLY LINE OF BUTTONWOOD HARBOUR SECTION NO. 2. 148.42' TO A 4" X 4" CONCRETE MONUMENT ON THE CORNER OF SAID SUBDIVISON: THENCE CONTINUE S 32°56'54" E ALONG THE BOUNDARY COMMON TO THE LANDS DESCRIBED IN O.R. BOOK 893, PAGE 787, ET SEQ., AND THE LANDS DESCRIBED IN O.R. 893, PAGE 789, ET SEQ., PUBLC RECORDS OF SARASOTA COUNTY, FLORIDA. 4.08'; THENCE CONTINUE ALONG SAID COMMON BOUNDARY S 51°39'15" E, 157.39' TO A 4" X 4" CONCRETE MONUEMTN AT THE CORNER OF BUTTONWOOD HARBOUR SECTION NO. 2 : THENCE CONTINUE ALONG SAID COMMON BOUNDARY S 75°14'25" E, 5.18' TO THE WESTERLY CORNER OF THE PRIVATE ROAD RIGHT OF WAY KNOWN AS WINSLOW PLACE: THENCE N 29°47'09" E ALONG THE SOUTHEASTERLY LINE OF THE BUFFER ZONE AND SOUTHEASTERLY LINE OF LOT 6 AS SHOWN ON THE UNRECORDED PLAT OF BUTTONWOOD PLACE SECTON NO. 2, 10.35'; THENCE S 75°14'32" E, ALONG THE CENTERLINE OF THE PRIVATE ROAD KNOWN AS WINSLOW PLACE, 150.82', THENCE S 0°11'45" E, ALONG THE CENTERLINE OF SAID WINSLOW PLACE, 167.45' TO THE POINT OF THE BEGINNING.

LESS THEREFROM ANY PORTIONS OF LANDS DESCRIBED IN OFFICIAL RECORDS BOOK 893, PAGE 789 LYING WITH IN THE ABOVE DESCRIBED PARCEL

NPDES

Permit # PB24-0986
REVIEWED FOR CODE COMPLIANCE
LONGBOAT KEY BUILDING DEPT.
AUG 28 2024
APPROVED
Reviewer: Nick Bubs PE MEP

BLDG PERMIT PLANS
FILE
Copy of Record

Site Data

SITE ACREAGE:	1.38 AC.±
PROPOSED BUILDING AREA:	14,408 SF
MAXIMUM FLOOR AREA RATIO:	0.30
PROPOSED FLOOR AREA RATIO:	14,408/60,112 = 0.24
EXISTING ZONING:	C–1 (LIMITED COMMERCIAL)
FUTURE LAND USE:	CL
OPEN SPACE REQUIRED:	0.276 AC. (20%)
OPEN SPACE PROVIDED:	0.39 AC. (.28%)
MAX. BLDG. HEIGHT:	30 FT
FLOOD ZONE:	"AE10 & AE11" 12115C 0107 F, DATED NOVEMBER 04, 2016

Construction Schedule

START DATE: SEPT 2024
END DATE: JULY 2025

ALL BUILDING PERMITS WILL BE ISSUED PRIOR TO THE EXPIRATION OF THE CLOS OR FSP, WHICHEVER OCCURS FIRST.

Setback and Buffer Requirements

SETBACKS:

FRONT	20'
SIDE	15'
REAR	20'
PERIMETER BUFFER:	10'

MIN. ROADWAY BUFFER OPEN SPACE:
400.25' x 20' = 8,005 SF x 0.70 = 5,603 SF

ROADWAY BUFFER OPEN SPACE PROVIDED: 5,665 SF (71%)

Parking Data

GENERAL PARKING REQUIRED:	14,408/300 = 49 SPA. (4 ADA)
IF 4 DIFFERENT USES:	14,408/400 = 37 SPA. (3 ADA)
PROPOSED PARKING:	43 SPA. (4 ADA)

OFFICE = 1/300 SF, MEDICAL & DENTAL = 1/200 SF, RESTAURANTS = 1/150 SF

Owner/Applicant:
Brista Homes
597 Buttonwood Drive
Longboat Key, Florida 34240

Engineer: Steve Shroyer, P.E.
Shroyer Drapala Engineering, LLC
1111 3rd Ave. W., Suite 210
Bradenton, Florida 34205
Phone (941) 746-4000

Surveyor: James B. Amberger
Jim Amberger Land Surveying, LLC
1055 South Tamiami Trail, Suite 110-B
Sarasota, Florida 34236
Phone (941) 955-6333

Architect: Justin King
JKing Designs
1383 5th St
Sarasota, FL 34236
Phone (941) 465-0036

Landscaping: Robert C. Gause
Gause & Associates, Inc.
323 10th Ave. W., Suite 102
Palmetto, Florida 34221
Phone (941) 713-0782

Shroyer Drapala Engineering, LLC
608 6th St W, Palmetto FL 34221

RECEIVED
AUG 28 2024
TOWN OF LONGBOAT KEY
Planning, Zoning & Building

BLDG PERMIT PLANS
FILE
Copy of Record

Brista Homes
Submitted For:

Town of Longboat Key
Approval

STEVE J. SHROYER LICENSE No. 32052 STATE OF FLORIDA PROFESSIONAL ENGINEER

Steve Shroyer
PE No. 32052
I attest to the accuracy and integrity of this document
2024.08.13

NPDES

C:\Users\User\Shroyer Drapala\Projects – Documents\26300 GMD & Buttonwood Dr Property\CADD\Plan Set\1 26300 COV.dwg August 13, 2024 – 10:23am

C:\Users\User\Shroyer Drapala\Projects – Documents\26300 GMD & Buttonwood Dr Property\CADD\Plan Set\1 26300 COV.dwg

General

1. TOWN OF LONGBOAT KEY PUBLIC WORKS AND UTILITIES INFRASTRUCTURE SPECIFICATIONS ARE THE MINIMUM ALLOWABLE WATER AND/OR WASTEWATER CONSTRUCTION STANDARDS. WHERE ANY NOTE OR DETAIL ON THESE PLANS, CONFLICT WITH THE TOWN OF LONGBOAT KEY PUBLIC WORKS INFRASTRUCTURE SPECIFICATIONS, THE MORE STRINGENT INTERPRETATION, AS DETERMINED BY THE TOWN'S INFRASTRUCTURE INSPECTOR, SHALL BE APPLIED.
2. CONTRACTOR SHALL NOTIFY "SUNSHINE STATE ONE CALL" (1-800-432-4770) AT LEAST 72 HOURS BEFORE EXCAVATING.
3. CONTRACTOR SHALL BE RESPONSIBLE FOR SITE SECURITY AND JOB SAFETY. CONSTRUCTION ACTIVITIES SHALL BE IN ACCORDANCE WITH OSHA STANDARDS AND LOCAL REQUIREMENTS.
4. ACCESSIBLE ROUTES, PARKING SPACES, RAMPS, SIDEWALKS AND WALKWAYS SHALL BE CONSTRUCTED IN CONFORMANCE WITH THE FEDERAL AMERICANS WITH DISABILITIES ACT AND WITH STATE AND LOCAL LAWS AND REGULATIONS (WHICHEVER ARE MORE STRINGENT).
5. AREAS DISTURBED DURING CONSTRUCTION AND NOT RESTORED WITH IMPERVIOUS SURFACES (BUILDINGS, PAVEMENTS, WALKS, ETC.) SHALL RECEIVE SOD, UNLESS OTHERWISE NOTED.
6. UPON AWARD OF CONTRACT, CONTRACTOR SHALL MAKE NECESSARY CONSTRUCTION NOTIFICATIONS AND APPLY FOR AND OBTAIN NECESSARY PERMITS, PAY FEES, AND POST BONDS ASSOCIATED WITH THE WORK INDICATED ON THE DRAWINGS, IN THE SPECIFICATIONS, AND IN THE CONTRACT DOCUMENTS. DO NOT CLOSE OR OBSTRUCT ROADWAYS, SIDEWALKS, AND FIRE HYDRANTS, WITHOUT APPROPRIATE PERMITS.
7. AREAS OUTSIDE THE LIMITS OF PROPOSED WORK DISTURBED BY THE CONTRACTOR'S OPERATIONS SHALL BE RESTORED BY THE CONTRACTOR TO THEIR ORIGINAL CONDITION AT THE CONTRACTOR'S EXPENSE.
8. IN THE EVENT THAT SUSPECTED CONTAMINATED SOIL, GROUNDWATER, AND OTHER MEDIA ARE ENCOUNTERED DURING EXCAVATION AND CONSTRUCTION ACTIVITIES BASED ON VISUAL, OLFACTORY, OR OTHER EVIDENCE, THE CONTRACTOR SHALL STOP WORK IN THE VICINITY OF THE SUSPECT MATERIAL TO AVOID FURTHER SPREADING OF THE MATERIAL, AND SHALL NOTIFY THE OWNER IMMEDIATELY SO THAT THE APPROPRIATE TESTING AND SUBSEQUENT ACTION CAN BE TAKEN.
9. CONTRACTOR SHALL PREVENT DUST, SEDIMENT, AND DEBRIS FROM EXITING THE SITE AND SHALL BE RESPONSIBLE FOR CLEANUP, REPAIRS AND CORRECTIVE ACTION IF SUCH OCCURS.
10. DAMAGE RESULTING FROM CONSTRUCTION LOADS SHALL BE REPAIRED BY THE CONTRACTOR AT NO ADDITIONAL COST TO OWNER.
11. CONTRACTOR SHALL CONTROL STORMWATER RUNOFF DURING CONSTRUCTION TO PREVENT ADVERSE IMPACTS TO OFF SITE AREAS, AND SHALL BE RESPONSIBLE TO REPAIR RESULTING DAMAGES, IF ANY, AT NO COST TO OWNER.
12. ALL PROPOSED CONSTRUCTION IS TO MEET OR EXCEED LATEST APPLICABLE TOWN OF LONGBOAT KEY PUBLIC WORKS AND UTILITIES INFRASTRUCTURE SPECIFICATIONS AND IS TO MEET ENGINEER'S SPECIFICATIONS. ALL PROPOSED CONSTRUCTION IS TO BE PRIVATELY OWNED AND MAINTAINED.
13. THE CONTRACTOR IS TO COORDINATE THE LOCATION AND ELEVATION OF ALL FP&L, VERIZON AND IRRIGATION SERVICE SLEEVES WITH RESPECTIVE AGENCY PRIOR TO CONSTRUCTION.
14. ALL PROPOSED ELECTRICAL AND COMMUNICATION SERVICES ARE TO BE LOCATED UNDERGROUND AS DIRECTED BY RESPECTIVE AGENCY.
15. THE CONTRACTOR IS RESPONSIBLE FOR COORDINATION AND ISSUANCE OF ALL COMMENCEMENT AND/OR PROGRESS NOTICES TO GOVERNMENTAL AGENCIES DURING THE COURSE OF CONSTRUCTION, AS REQUIRED FOR INSPECTION, TESTING AND TRACKING PER APPLICABLE AGENCY PERMIT CONDITIONS.
16. CONTRACTOR IS RESPONSIBLE FOR OBTAINING AND COMPLYING WITH ALL PERMIT CONDITIONS AND STIPULATIONS FOR ALL LOCAL, REGIONAL AND STATE AGENCIES, INCLUDING, BUT NOT LIMITED TO, FINAL SITE PLANS, UTILITIES, DRAINAGE, FUGITIVE PARTICULATES AND EROSION.
17. ALL UTILITIES AND/OR DRAINAGE SHOWN AS EXISTING WERE DERIVED FROM THE BEST AVAILABLE INFORMATION. IT IS THE CONTRACTOR'S RESPONSIBILITY TO VERIFY THE ACTUAL LOCATION, SIZE, TYPE AND AMOUNT OF EXISTING UTILITIES PRIOR TO CONSTRUCTION. THE CONTRACTOR TO NOTIFY SUNSHINE UNDERGROUND FACILITIES NOTIFICATION (1-800-432-4770), MCPWD AND FP&L 48 HOURS MINIMUM PRIOR TO START OF CONSTRUCTION FOR POSSIBLE UTILITY LOCATIONS NOT SHOWN ON PLANS.
18. THE CONTRACTOR IS RESPONSIBLE FOR ESTIMATING AND CALCULATING ALL CUT AND FILL QUANTITIES. PRIOR TO BID SUBMISSION THE CONTRACTOR SHALL CONDUCT ANY ADDITIONAL SURVEYS AND SOIL TESTS HE DEEMS NECESSARY TO CALCULATE THE CUT AND FILL QUANTITIES PROPERLY. ADDITIONAL SURVEYS AND TESTS MADE BY THE CONTRACTOR SHALL BE MADE AT NO ADDITIONAL COST TO THE OWNER.
19. CONTRACTOR IS RESPONSIBLE FOR OBTAINING COPIES OF ALL SITE WORK APPROVALS, FROM THE OWNER, AND MAINTAIN A COPY ON-SITE AND FOLLOWING ALL STIPULATIONS OF THE APPROVALS.
20. CONTRACTOR IS RESPONSIBLE FOR PERFORMING ALL TESTING, FOR INFORMATION SHOWN ON THESE PLANS, AND AS RECOMMENDED IN THE GEOTECHNICAL REPORT.
21. ALL THE SIGNING AND PAVEMENT MARKINGS SHALL BE PROVIDED IN ACCORDANCE WITH THE LATEST EDITIONS OF THE MANUAL ON UNIFORM TRAFFIC CONTROL DEVICES (MUTCD), FLORIDA DEPARTMENT OF TRANSPORTATION (FDOT) DESIGN STANDARDS, AND THE TOWN OF LONGBOAT KEY TRAFFIC STANDARDS.

    TRAFFIC CONTROL DEVICES THAT DO NOT CONFORM TO THE LATEST EDITION OF THE TOWN OF LONGBOAT KEY DESIGN STANDARDS, WITHIN PUBLICLY MAINTAINED RIGHT-OF-WAY, WILL REQUIRE A SIGN AND HARDWARE DIAGRAM AND, IF ACCEPTABLE, AN EXECUTED MAINTENANCE AGREEMENT PRIOR TO APPROVAL OF CONSTRUCTION PLANS.

Utilities

1. THE LOCATIONS, SIZES, AND TYPES OF EXISTING UTILITIES ARE SHOWN AS AN APPROXIMATE REPRESENTATION ONLY. THE OWNER OR IT'S REPRESENTATIVE(S) HAVE NOT INDEPENDENTLY VERIFIED THIS INFORMATION AS SHOWN ON THE PLANS. THE UTILITY INFORMATION SHOWN DOES NOT GUARANTEE THE ACTUAL EXISTENCE, SERVICEABILITY, OR OTHER DATA CONCERNING THE UTILITIES, NOR DOES IT GUARANTEE AGAINST THE POSSIBILITY THAT ADDITIONAL UTILITIES MAY BE PRESENT THAT ARE NOT SHOWN ON THE PLANS. PRIOR TO ORDERING MATERIALS AND BEGINNING CONSTRUCTION, THE CONTRACTOR SHALL VERIFY AND DETERMINE THE EXACT LOCATIONS, SIZES, AND ELEVATIONS OF THE POINTS OF CONNECTIONS TO EXISTING UTILITIES AND, SHALL CONFIRM THAT THERE ARE NO INTERFERENCES WITH EXISTING UTILITIES AND THE PROPOSED UTILITY ROUTES, INCLUDING ROUTES WITHIN THE PUBLIC RIGHTS OF WAY.
2. WHERE AN EXISTING UTILITY IS FOUND TO CONFLICT WITH THE PROPOSED WORK, OR EXISTING CONDITIONS DIFFER FROM THOSE SHOWN SUCH THAT THE WORK CANNOT BE COMPLETED AS INTENDED, THE LOCATION, ELEVATION, AND SIZE OF THE UTILITY SHALL BE ACCURATELY DETERMINED WITHOUT DELAY BY THE CONTRACTOR, AND THE INFORMATION FURNISHED IN WRITING TO THE OWNER'S REPRESENTATIVE FOR THE RESOLUTION OF THE CONFLICT AND CONTRACTOR'S FAILURE TO NOTIFY PRIOR TO PERFORMING ADDITIONAL WORK RELEASES OWNER FROM OBLIGATIONS FOR ADDITIONAL PAYMENTS WHICH OTHERWISE MAY BE WARRANTED TO RESOLVE THE CONFLICT..
3. THE LOCATION, SIZE, DEPTH, AND SPECIFICATIONS FOR CONSTRUCTION OF PROPOSED PRIVATE UTILITY SERVICES SHALL BE INSTALLED ACCORDING TO THE REQUIREMENTS PROVIDED BY, AND APPROVED BY, THE RESPECTIVE UTILITY COMPANY (GAS, TELEPHONE, ELECTRIC, FIRE ALARM, ETC.). FINAL DESIGN LOADS AND LOCATIONS TO BE COORDINATED WITH OWNER AND ARCHITECT.
4. CONTRACTOR SHALL MAKE ARRANGEMENTS FOR AND SHALL BE RESPONSIBLE FOR PAYING FEES FOR POLE RELOCATION AND FOR THE ALTERATION AND ADJUSTMENT OF GAS, ELECTRIC, TELEPHONE, FIRE ALARM, AND ANY OTHER PRIVATE UTILITIES, WHETHER WORK IS PERFORMED BY CONTRACTOR OR BY THE UTILITIES COMPANY.
5. CONTRACTOR SHALL COORDINATE WITH ELECTRICAL CONTRACTOR AND SHALL FURNISH EXCAVATION, INSTALLATION, AND BACKFILL OF ELECTRICAL FURNISHED SITE WORK RELATED ITEMS SUCH AS PULL BOXES, CONDUITS, DUCT BANKS, LIGHT POLE BASES, AND CONCRETE PADS. SITE CONTRACTOR SHALL FURNISH CONCRETE ENCASEMENT OF DUCT BANKS IF REQUIRED BY THE UTILITY COMPANY AND AS INDICATED ON THE DRAWINGS.
6. ALL UTILITY AND DRAINAGE PIPE SHALL BE PROPERLY DEWATERED AND BEDDING PROVIDED IN ACCORDANCE WITH TOWN OF LONGBOAT KEY PUBLIC WORKS AND UTILITIES INFRASTRUCTURE SPECIFICATIONS, TO ENSURE A STABLE TRENCH BOTTOM, TO PROPERLY SUPPORT THE PIPE, AT NO ADDITIONAL COST TO THE OWNER.
7. CONTRACTOR SHALL OBTAIN THE LATEST COPY OF THE DESIGN PLANS AND CONFIRM CONSISTENCY WITH THE UTILITY SERVICE PLANS, PRIOR TO INSTALLATION OF THE UTILITIES. ANY VARIANCE SHALL BE BROUGHT TO THE ATTENTION OF THE ENGINEER OF RECORD, PRIOR TO CONSTRUCTION.
8. ALL DRAINAGE AND SANITARY STRUCTURE INTERIOR DIAMETERS (4' MIN.) SHALL BE DETERMINED BY THE MANUFACTURER BASED ON THE PIPE CONFIGURATIONS SHOWN ON THESE PLANS AND LOCAL MUNICIPAL STANDARDS. FOR MANHOLES THAT ARE 20 FEET IN DEPTH AND GREATER, THE MINIMUM DIAMETER SHALL BE 5 FEET.
9. ALL CONSTRUCTION IS TO BE STAKED IN THE FIELD BY OR UNDER THE SUPERVISION OF A FLORIDA REGISTERED LAND SURVEYOR. RECORD DRAWINGS SHALL BE PROVIDED BY THE SURVEYOR AND SHALL CONSIST OF ACTUAL CONSTRUCTION AS-BUILT DATA AND LOCATIONS AND SHALL MEET TOWN OF LONGBOAT KEY PUBLIC WORKS AND UTILITIES INFRASTRUCTURE SPECIFICATIONS (LATEST ISSUE JANUARY 2017).
10. THE CONTRACTOR IS RESPONSIBLE FOR THE PRODUCTION OF REPRODUCIBLE RECORD DRAWINGS. PRIOR TO SCHEDULING OF ANY UNDERGROUND UTILITY PRESSURE TESTS, CONTRACTOR SHALL HAVE OBTAINED (FROM A PROFESSIONAL SURVEYOR) ALL NECESSARY FIELD DATA REQUIRED FOR THE PRODUCTION OF RECORD DRAWINGS. SAID RECORD DRAWINGS ARE TO MEET THE REQUIREMENTS OF TOWN OF LONGBOAT KEY PUBLIC WORKS AND UTILITIES INFRASTRUCTURE SPECIFICATIONS AND FDEP. THE CONTRACTOR SHALL PROCESS SAID DRAWINGS THROUGH TOWN OF LONGBOAT KEY PUBLIC WORKS AND UPON COMPLETION SHALL PROVIDE TWO REPRODUCIBLE MYLARS AND FIVE SETS OF PRINTS OF THE RECORD DRAWINGS, SIGNED AND SEALED BY A PROFESSIONAL LAND SURVEYOR TO THE ENGINEER. THESE RECORD DRAWINGS SHALL BE CERTIFIED TO THE OWNER, APPROPRIATE GOVERNMENTAL AGENCIES, AND SHROYER DRAPALA ENGINEERING, LLC. IF CONSTRUCTION STAKEOUT IS PROVIDED BY THE OWNER, THE CONTRACTOR SHALL ACCURATELY RECORD THE LOCATION OF ALL WORK THAT MAY SUBSEQUENTLY BECOME CONCEALED OR INACCESSIBLE, AS WELL AS MARK OR EXPOSE UNDERGROUND FACILITIES AS NECESSARY TO FACILITATE THE PREPARATION OF THE RECORD DRAWINGS BY THE OWNER, AND PROVIDE SAID INFORMATION TO THE OWNER.
13. A MINIMUM OF 10 FEET OF HORIZONTAL SEPARATION (OUTSIDE OF PIPE TO OUTSIDE OF PIPE) IS REQUIRED BETWEEN WATER MAINS AND FORCE MAINS, AND BETWEEN WATER MAINS AND GRAVITY SEWER, AND BETWEEN WATER MAINS AND STORM SEWER, AND BETWEEN STORM SEWER AND GRAVITY SEWER. ALL OTHER COMBINATIONS OF WATER, GRAVITY SEWER, FORCE MAIN, RECLAIMED WATER AND STORM SEWER PIPES MUST HAVE 5 FEET OF SEPARATION AT A MINIMUM, EXCEPT FOR GRAVITY SEWER AND FORCE MAINS, WHICH SHALL HAVE A MINIMUM OF 3 FEET OF SEPARATION.
14. CONTRACTOR IS RESPONSIBLE FOR ALL GOVERNMENTAL CONSTRUCTION FEES AND CHARGES. I.E. INSPECTIONS AND TESTING FEES. HOWEVER, IMPACT FEES (FIF), IF APPLICABLE, TO BE PAID BY THE OWNER.

Layout and Materials

1. DIMENSIONS ARE FROM THE FACE OF CURB, FACE OF BUILDING, FACE OF WALL, AND CENTER LINE OF PAVEMENT MARKINGS, UNLESS OTHERWISE NOTED.
2. PROPOSED BOUNDS AND ANY EXISTING PROPERTY LINE MONUMENTATION DISTURBED DURING CONSTRUCTION SHALL BE SET OR RESET BY A PROFESSIONAL LICENSED SURVEYOR.
3. PRIOR TO START OF CONSTRUCTION, CONTRACTOR SHALL VERIFY EXISTING PAVEMENT ELEVATIONS AT INTERFACE WITH PROPOSED PAVEMENTS, AND EXISTING GROUND ELEVATIONS ADJACENT TO DRAINAGE OUTLETS TO ASSURE PROPER TRANSITIONS BETWEEN EXISTING AND PROPOSED FACILITIES.
4. SYMBOLS AND LEGENDS OF PROJECT FEATURES ARE GRAPHIC REPRESENTATIONS AND ARE NOT NECESSARILY SCALED TO THEIR ACTUAL DIMENSIONS OR LOCATIONS ON THE DRAWINGS. THE CONTRACTOR SHALL REFER TO THE DETAIL SHEET DIMENSIONS, MANUFACTURERS' LITERATURE, SHOP DRAWINGS AND FIELD MEASUREMENTS OF SUPPLIED PRODUCTS FOR LAYOUT OF THE PROJECT FEATURES.
5. CONTRACTOR SHALL NOT RELY SOLELY ON ELECTRONIC VERSIONS OF PLANS, SPECIFICATIONS, AND DATA FILES THAT ARE OBTAINED FROM THE DESIGNERS, BUT SHALL VERIFY LOCATION OF PROJECT FEATURES IN ACCORDANCE WITH THE PAPER COPIES OF THE PLANS AND SPECIFICATIONS THAT ARE SUPPLIED AS PART OF THE CONTRACT DOCUMENTS.

Demolition

1. CONTRACTOR SHALL REMOVE AND DISPOSE OF EXISTING MANMADE SURFACE FEATURES WITHIN THE LIMIT OF WORK INCLUDING BUILDINGS, STRUCTURES, PAVEMENTS, SLABS, CURBING, FENCES, UTILITY POLES, SIGNS, ETC. UNLESS INDICATED OTHERWISE ON THE DRAWINGS. REMOVE AND DISPOSE OF EXISTING UTILITIES, FOUNDATIONS AND UNSUITABLE MATERIAL BENEATH.
2. EXISTING UTILITIES SHALL BE TERMINATED, AS NOTED, IN CONFORMANCE WITH LOCAL, STATE AND INDIVIDUAL UTILITY COMPANY STANDARD SPECIFICATIONS AND DETAILS. THE CONTRACTOR SHALL COORDINATE UTILITY SERVICE DISCONNECTS WITH THE UTILITY REPRESENTATIVES.
3. CONTRACTOR SHALL DISPOSE OF DEMOLITION DEBRIS IN ACCORDANCE WITH APPLICABLE FEDERAL, STATE AND LOCAL REGULATIONS, ORDINANCES AND STATUTES.

Erosion Control

1. PRIOR TO STARTING ANY OTHER WORK ON THE SITE, THE CONTRACTOR SHALL NOTIFY APPROPRIATE AGENCIES AND SHALL INSTALL EROSION CONTROL MEASURES AS SHOWN ON THE PLANS AND AS IDENTIFIED IN FEDERAL, STATE, AND LOCAL APPROVAL DOCUMENTS PERTAINING TO THIS PROJECT.
2. CONTRACTOR SHALL INSPECT AND MAINTAIN EROSION CONTROL MEASURES, AND REMOVE SEDIMENT THEREFROM ON A WEEKLY BASIS AND WITHIN TWELVE HOURS AFTER EACH STORM EVENT AND DISPOSE OF SEDIMENTS IN AN UPLAND AREA SUCH THAT THEY DO NOT ENCUMBER OTHER DRAINAGE STRUCTURES AND PROTECTED AREAS.
3. CONTRACTOR SHALL BE FULLY RESPONSIBLE TO CONTROL CONSTRUCTION SUCH THAT SEDIMENTATION SHALL NOT AFFECT REGULATORY PROTECTED AREAS, WHETHER SUCH SEDIMENTATION IS CAUSED BY WATER, WIND, OR DIRECT DEPOSIT.
4. CONTRACTOR SHALL PERFORM CONSTRUCTION SEQUENCING SUCH THAT EARTH MATERIALS ARE EXPOSED FOR A MINIMUM OF TIME BEFORE THEY ARE COVERED, SODDED, OR OTHERWISE STABILIZED TO PREVENT EROSION.
5. UPON COMPLETION OF CONSTRUCTION AND ESTABLISHMENT OF PERMANENT GROUND COVER, CONTRACTOR SHALL REMOVE AND DISPOSE OF EROSION CONTROL MEASURES AND CLEAN SEDIMENT AND DEBRIS FROM ENTIRE DRAINAGE AND SEWER SYSTEMS.

Clearing and Grubbing Notes

1. EROSION CONTROL PREVENTIVE METHODS, SILT SCREENING, TO BE IN PLACE PRIOR TO COMMENCEMENT OF EARTHWORK CONSTRUCTION TO MINIMIZE EROSION AND SEDIMENTARY RUNOFF. THE CONTRACTOR SHALL PERFORM DAILY SITE INSPECTIONS FOR ANY POTENTIAL EROSION PROBLEMS. IF ANY POTENTIAL EROSION PROBLEMS ARE ENCOUNTERED, OR HAVE OCCURRED, THE CONTRACTOR SHALL INSTALL PROPER EROSION CONTROL MEASURES IMMEDIATELY. STORMWATER TREATMENT FACILITIES ARE TO BE CONSTRUCTED EARLY IN SITE DEVELOPMENT, WITH NO UNTREATED RUNOFF OFF-SITE OCCURRING DURING CONSTRUCTION.

    SEDIMENT AND EROSION CONTROL DEVICES SHALL BE INSTALLED AND THEN VERIFIED/INSPECTED BY TOWN OF LONGBOAT KEY PUBLIC WORKS DEPARTMENT, PRIOR TO COMMENCEMENT OF CONSTRUCTION.
2. ALL EXISTING TREES AND BRUSH DESIGNATED FOR REMOVAL ARE TO BE CLEARED AND DISPOSED OF OFFSITE, OR BURNED ON-SITE IF APPROVED BY THE DISTRICT FIRE DEPARTMENT AND COUNTY HEALTH DEPT.. ALL EXISTING TREES AND UNDERBRUSH AREAS THAT ARE TO REMAIN UNDISTURBED SHALL BE PROTECTED BY BARRICADES. THE CONTRACTOR SHALL INSTALL SAID BARRICADES AT COMMENCEMENT OF CONSTRUCTION AND REMOVE FOLLOWING FINAL GRADING AND LANDSCAPING.
3. SODDING TO BE COMPLETED IMMEDIATELY UPON COMPLETION OF FINISH GRADING. CONTRACTOR IS RESPONSIBLE FOR MAINTAINING DUST CONTROL.
4. TOPOGRAPHIC AND PROPERTY SURVEYS GIVING LOT SIZE, GROUND ELEVATIONS, OBSTRUCTIONS ON SITE, LOCATION AND DEPTHS OF SEWERS, CONDUITS, PIPES, EXISTING STRUCTURES, CURBS, PAVEMENTS, TRACTS, AND SOIL BORING DATA GIVING THE NATURE OF GROUND AND SUBSURFACE CONDITIONS HAVE BEEN OBTAINED FROM RELIABLE SOURCES. THE ACCURACY OF THIS DATA IS NOT GUARANTEED, AND IS FURNISHED SOLELY AS AND ACCOMMODATION TO THE CONTRACTOR. USE OF THIS DATA SHALL BE MADE AT THE CONTRACTOR'S DISCRETION. NO ADDITIONAL COMPENSATION WILL BE GRANTED DUE TO CONTRACTOR'S LACK OF KNOWLEDGE OF SITE CONDITIONS. PRIOR TO BID SUBMISSION, CONDUCT ANY ADDITIONAL SURVEYS AND SOIL TESTS YOU MAY DEEM NECESSARY TO VERIFY THE ACCURACY OF THE INFORMATION PROVIDED.
5. REFER TO EXISTING CONDITIONS PLAN AND DRAINAGE & GRADING PLAN FOR ADDITIONAL NOTES.
6. EXISTING WATER SERVICES ENCOUNTERED OR INTERFERING WITH PROPOSED CONSTRUCTION, TO BE REMOVED BACK TO MAIN AND CAPPED OFF, AT THE TOWN'S INSPECTOR'S DISCRETION.
7. EXOTIC, NUISANCE VEGETATION SHALL BE REMOVED FROM ALL UPLAND AREAS OF THE SITE, AS SHOWN ON THE EXOTIC PLANT SPECIES PLAN, INCLUDING REPLACEMENT, IN ACCORDANCE WITH TOWN OF LONGBOAT KEY REQUIREMENTS.

Existing Conditions Information

1. BASE PLAN: THE PROPERTY LINES SHOWN WERE DETERMINED BY A SURVEY, TOPOGRAPHY AND PHYSICAL FEATURES; BASED ON AN ACTUAL FIELD SURVEY PERFORMED ON THE GROUND BY PARK COASTAL SURVEYING, LLC.
2. ELEVATIONS SHOWN HERE ON ARE REFERENCE TO THE NORTH AMERICAN VERTICAL DATUM OF 1988 (NAVD 88) AS PER THE NGS BENCHMARK "872 3622 TIDAL 1 1935" (PID AC1038) PUBLISHED ELEVATION = 4.63'.

Drainage And Grading Notes

1. ALL CONSTRUCTION IS TO BE STAKED IN THE FIELD BY OR UNDER THE SUPERVISION OF A FLORIDA REGISTERED LAND SURVEYOR.
2. THE CONTRACTOR IS TO PROVIDE THE ENGINEER OF RECORD WITH REPRODUCIBLE RECORD DRAWINGS SHOWING ALL IMPROVEMENT LOCATIONS AND ELEVATIONS IN ACCORDANCE WITH LATEST TOWN OF LONGBOAT KEY PLANNING, PERMITTING AND INSPECTIONS AND SOUTHWEST FLORIDA WATER MANAGEMENT DISTRICT (SWFWMD) STANDARDS. THE CONTRACTOR SHALL ALSO PROVIDE FIVE SETS OF PRINTS, SIGNED AND SEALED BY A PROFESSIONAL LAND SURVEYOR, OF THE RECORD DRAWINGS TO THE ENGINEER OF RECORD. THESE RECORD DRAWINGS SHALL BE CERTIFIED TO THE OWNER, APPROPRIATE GOVERNMENTAL AGENCIES AND TO SHROYER DRAPALA ENGINEERING, LLC. RECORD DRAWINGS SHALL SPECIFICALLY INCLUDE STORMWATER FACILITY LOCATIONS, INCLUDING TOP OF BANK, UNDERDRAIN AND CONTROL STRUCTURES, SHALL BE PERFORMED BY A REGISTERED LAND SURVEYOR AND REVIEWED BY THE ENGINEER OF RECORD PRIOR TO ACCEPTANCE AND PAYMENT. BENCH MARKS WITH THE ELEVATION CLEARLY AND PERMANENTLY MARKED ARE TO BE PLACED ON THE TOP OF ALL PROPOSED OUTFALL CONTROL STRUCTURES. RECORD DRAWINGS OF ALL MITIGATION AREAS INCLUDING ELEVATIONS, ZONES AND LIMITS SHALL BE PERFORMED BY A REGISTERED LAND SURVEYOR AND REVIEWED BY THE ENGINEER OF RECORD PRIOR TO ACCEPTANCE AND PAYMENT. THE RECORD DRAWINGS SHALL SPECIFICALLY INCLUDE THE SURFACE AREA OF STORMWATER FACILITY AREAS AT NORMAL WATER ELEVATION (NWL), AT HIGH WATER ELEVATION (HWLss), TOP OF BANK AND ALL MITIGATION AND/OR LITTORAL SHELF AREAS.
3. TO PREVENT SEDIMENTARY RUNOFF DURING CONSTRUCTION, STAKED SILT SCREENS OR INLET DEBRIS CONTROL SCREENS ARE TO BE PLACED AT STORM INLETS, OUTFALL LOCATIONS AND ADJACENT PROPERTY LINES AS REQUIRED PRIOR TO ANY CONSTRUCTION ACTIVITIES.

    SEDIMENT AND EROSION CONTROL DEVICES SHALL BE INSTALLED AND THEN VERIFIED/INSPECTED BY TOWN OF LONGBOAT KEY PUBLIC WORKS DEPARTMENT, PRIOR TO COMMENCEMENT OF CONSTRUCTION.

    THE CONTRACTOR IS RESPONSIBLE FOR MAINTAINING THE SEDIMENTATION BARRIERS IN A WORKING MANNER FOR THE DURATION OF CONSTRUCTION AND SHOULD BE CHECKED DAILY. SILTATION ACCUMULATIONS GREATER THAN THE LESSER OF 12 INCHES OR ONE-HALF OF THE DEPTH OF THE SEDIMENTATION BARRIER SHALL BE IMMEDIATELY REMOVED AND REPLACED IN UPLAND AREAS. IN ADDITION TO SPECIFIED EROSION CONTROL LOCATIONS, THE CONTRACTOR SHALL PERFORM DAILY SITE INSPECTIONS FOR POTENTIAL EROSION PROBLEMS. IF PROBLEMS OCCUR, THE CONTRACTOR IS RESPONSIBLE FOR INSTALLING APPROPRIATE EROSION CONTROL IMMEDIATELY. STORMWATER TREATMENT FACILITIES INCLUDING OUTFALL PER DETAIL ARE TO BE CONSTRUCTED EARLY IN SITE DEVELOPMENT, WITH NO OFF- SITE UNTREATED RUN-OFF OCCURRING DURING CONSTRUCTION. THE CONTRACTOR IS RESPONSIBLE FOR REMOVING TEMPORARY EROSION CONTROL DEVICES FOLLOWING COMPLETION OF ALL CONSTRUCTION AND FINAL STABILIZATION.
4. TOPOGRAPHIC AND PROPERTY SURVEYS GIVING LOT SIZE, GROUND ELEVATIONS, OBSTRUCTIONS ON SITE, LOCATIONS AND DEPTHS OF SEWERS, CONDUITS, PIPES, EXISTING STRUCTURES, CURBS, PAVEMENTS, TRACTS, AND SOIL BORING DATA GIVING THE NATURE OF GROUND AND SUBSURFACE CONDITIONS HAVE BEEN OBTAINED FROM RELIABLE SOURCES. THE ACCURACY OF THIS DATA IS NOT GUARANTEED, AND IS FURNISHED SOLELY AS AN ACCOMMODATION TO THE CONTRACTOR. USE OF THIS DATA SHALL BE MADE AT THE CONTRACTOR'S DISCRETION. NO ADDITIONAL COMPENSATION WILL BE GRANTED DUE TO THE CONTRACTOR'S LACK OF KNOWLEDGE OF SITE CONDITIONS. PRIOR TO BID SUBMISSION, THE CONTRACTOR SHALL CONDUCT ANY ADDITIONAL SURVEYS AND SOILS TESTS HE MAY DEEM NECESSARY TO VERIFY THE ACCURACY OF THE INFORMATION PROVIDED.
5. THE CONTRACTOR SHALL VERIFY TOPOGRAPHY AND SATISFY HIMSELF AS TO THE EXTENT OF FILL NECESSARY TO ACHIEVE FINISHED GRADE PRIOR TO AWARD OF CONTRACT. THERE SHALL BE NO CLAIM FOR EXTRAS NOTWITHSTANDING SITE PLAN REVISIONS PROMULGATED SUBSEQUENT TO AWARD OF CONTRACT.
6. ALL BIDDERS ARE HEREBY ADVISED THAT ALL EXCAVATION ON THIS PROJECT MUST COMPLY WITH FLORIDA STATUTE 90-96 "TRENCH SAFETY ACT", AND THAT THE COST OF COMPLIANCE IS TO BE INCLUDED IN HIS BASE BID. THE BIDDER SHALL INDICATE ON THE BID FORM THE COSTS ASSOCIATED WITH COMPLIANCE.
7. THE CONTRACTOR SHALL SUBMIT SHOP DRAWINGS FOR ALL STRUCTURES PRIOR TO INSTALLATIONS.
8. REFER TO GRADING DETAIL SHEETS FOR CROSS SECTION DETAILS.
9. REFER TO CONSTRUCTION TECHNICAL SPECIFICATIONS FOR COMPACTION REQUIREMENTS, SODDING REQUIREMENTS, AND PAVING CONSTRUCTION MATERIAL SPECIFICATIONS.
10. ALL FILL AREAS ARE TO BE CONSTRUCTED IN 12" MAXIMUM LIFTS.
11. THE CONTRACTOR IS TO REVIEW SOILS TESTS AS PERFORMED BY THE SOIL CONSULTANT AND IS ENCOURAGED TO CONDUCT ON-SITE TESTING TO SATISFY HIMSELF AS TO ACTUAL LIMITS OF REMOVAL AND REPLACEMENT OF UNSUITABLE MATERIALS PRIOR TO BIDDING.
12. THE CONTRACTOR IS TO PROVIDE THE ENGINEER OF RECORD WITH VERIFICATION OF FINAL GRADES PRIOR TO FINAL ACCEPTANCE OF THE PROJECT.
13. TV VIDEO INSPECTION IS REQUIRED FOR ALL STORMWATER PIPES (INCLUDING PRIVATE SYSTEMS).

STORMWATER POLLUTION PREVENTION PLAN INSPECTION REPORT FORM:

Inspections must occur at least once a week and within 24 hours of the end of a storm event that is 0.50 inches or greater.

Project Name: Brista Homes — **FDEP NPDES Stormwater Identification Number:**
FFLR10_____

Location	Rain data	Type of control (see below)	Date installed /modified	Current Condition (see below)	Corrective Action/ Other Remarks

Condition Code:
G = Good M = Marginal, needs maintenance or replacement soon P = Poor, needs immediate maintenance or replacement
C = Needs to be cleaned O = Other

Control Type Codes

1. Silt Fence	10. Storm drain inlet protection	19. Reinforced soil retaining system	28. Detention pond
2. Earth dikes	11. Vegetative buffer strip	20. Gabion	29. Retention pond
3. Structural diversion	12. Vegetative preservation area	21. Sediment Basin	30. Waste disposal / housekeeping
4. Swale	13. Retention Pond	22. Temporary Sod	31. Dam
5. Sediment Trap	14. Construction entrance stabilization	23. Permanent Sod	32. Sand Bag
6. Check dam	15. Perimeter ditch	24. Mulch	33. Other
7. Subsurface drain	16. Curb and gutter	25. Geotextile	
8. Pipe slope drain	17. Paved road surface	26. Rip-rap	
9. Level spreaders	18. Rock outlet protection	27. Tree protection	

Inspector Information:

Name _____ Qualification _____ Date _____

The above signature also shall certify that this facility is in compliance with the Stormwater Pollution Prevention Plan and the State of Florida Generic Permit for Stormwater Discharge from Large and Small Construction Activities if there are not any incidents of non-compliance identified above.

* * * * * *

"I certify under penalty of law that this document and all attachments were prepared under my direction or supervision in accordance with a system designed to assure that qualified personnel properly gathered and evaluated the information submitted. Based on my inquiry of the person or persons who manage the system, or those persons directly responsible for gathering the information, the information submitted is, to the best of my knowledge and belief, true, accurate, and complete. I am aware that there are significant penalties for submitting false information, including the possibility of fine and imprisonment for knowing violations."

Name (Responsible Authority) _____ Date _____

RECEIVED
AUG 28 2024
TOWN OF LONGBOAT KEY
Planning, Zoning & Building

STORMWATER POLLUTION PREVENTION PLAN

CONTRACTOR SHALL BE RESPONSIBLE FOR COMPLETING THE "STORMWATER POLLUTION PREVENTION PLAN INSPECTION REPORT FORM", WHICH WILLBE KEPT ON SITE BY THE CONTRACTOR. INSPECTIONS MUST OCCUR AT LEAST ONCE A WEEK AND WITHIN 24 HOURS OF THE END OF A STORM EVENT THAT IS 0.50 INCHES OR GREATER.

Shroyer Drapala Engineering, LLC
P.O. Box 9282, Bradenton, FL 34206
1111 3rd Ave. W. Suite 210, Bradenton, FL 34205
Phone: (941) 746-4000
E-Mail: info@ShroyerDrapala.com

Submitted For:

Design By:	Drawn By:	Checked By:
JEC	TMF	JEC
Drawing Scale:	Drawing Date:	
N.T.S.	1/20/21	

General Notes For Brista Homes

Section 7, Township 36 S, Range 17 E
Town of Longboat Key, Florida

FSP-2

Steve Shroyer
PE No. 32052
I attest to the accuracy and integrity of this document
2024.08.13

F:\PROJECTS\26300 GMD & Buttonwood Dr Property\CADD\Plan Set\2 26300 GN.dwg January 05, 2022

NOTES:

1. PRIOR TO STARTING ANY OTHER WORK ON THE SITE, THE CONTRACTOR SHALL NOTIFY APPROPRIATE AGENCIES AND SHALL INSTALL EROSION CONTROL MEASURES AS SHOWN ON THE PLANS AND AS IDENTIFIED IN FEDERAL, STATE, AND LOCAL APPROVAL DOCUMENTS PERTAINING TO THIS PROJECT.
2. CONTRACTOR SHALL INSPECT AND MAINTAIN EROSION CONTROL MEASURES, AND REMOVE SEDIMENT THEREFROM ON A WEEKLY BASIS AND WITHIN TWELVE HOURS AFTER EACH STORM EVENT AND DISPOSE OF SEDIMENTS IN AN UPLAND AREA SUCH THAT THEY DO NOT ENCUMBER OTHER DRAINAGE STRUCTURES AND PROTECTED AREAS.
3. CONTRACTOR SHALL BE FULLY RESPONSIBLE TO CONTROL CONSTRUCTION SUCH THAT SEDIMENTATION SHALL NOT AFFECT REGULATORY PROTECTED AREAS, WHETHER SUCH SEDIMENTATION IS CAUSED BY WATER, WIND, OR DIRECT DEPOSIT.
4. CONTRACTOR SHALL PERFORM CONSTRUCTION SEQUENCING SUCH THAT EARTH MATERIALS ARE EXPOSED FOR A MINIMUM OF TIME BEFORE THEY ARE COVERED, SEEDED, OR OTHERWISE STABILIZED TO PREVENT EROSION.
5. UPON COMPLETION OF CONSTRUCTION AND ESTABLISHMENT OF PERMANENT GROUND COVER, CONTRACTOR SHALL REMOVE AND DISPOSE OF EROSION CONTROL MEASURES AND CLEAN SEDIMENT AND DEBRIS FROM ENTIRE DRAINAGE AND SEWER SYSTEMS.
6. EROSION CONTROL PREVENTIVE METHODS, SILT SCREENING AND/OR HAY BALES, TO BE IN PLACE PRIOR TO COMMENCEMENT OF EARTHWORK CONSTRUCTION TO MINIMIZE EROSION AND SEDIMENTARY RUNOFF. THE CONTRACTOR SHALL PERFORM DAILY SITE INSPECTIONS FOR ANY POTENTIAL EROSION PROBLEMS. IF ANY POTENTIAL EROSION PROBLEMS ARE ENCOUNTERED, OR HAVE OCCURRED, THE CONTRACTOR SHALL INSTALL PROPER EROSION CONTROL MEASURES IMMEDIATELY. STORMWATER TREATMENT FACILITIES ARE TO BE CONSTRUCTED EARLY IN SITE DEVELOPMENT, WITH NO UNTREATED RUNOFF OFF-SITE OCCURRING DURING CONSTRUCTION.
7. SEDIMENT AND EROSION CONTROL DEVICES SHALL BE INSTALLED AND THEN VERIFIED/INSPECTED BY TOWN OF LONGBOAT, PRIOR TO COMMENCEMENT OF CONSTRUCTION.
8. ALL EXISTING TREES AND BRUSH DESIGNATED FOR REMOVAL ARE TO BE CLEARED AND DISPOSED OF OFFSITE, OR BURNED ON-SITE IF APPROVED BY THE DISTRICT FIRE DEPARTMENT AND COUNTY HEALTH DEPT. ALL EXISTING TREES AND UNDERBRUSH AREAS THAT ARE TO REMAIN UNDISTURBED SHALL BE PROTECTED BY BARRICADES. THE CONTRACTOR SHALL INSTALL SAID BARRICADES AT COMMENCEMENT OF CONSTRUCTION AND REMOVE FOLLOWING FINAL GRADING AND LANDSCAPING.
9. SODDING AND/OR GRASSING TO BE COMPLETED IMMEDIATELY UPON COMPLETION OF FINISH GRADING. CONTRACTOR IS RESPONSIBLE FOR MAINTAINING DUST CONTROL.
10. TOPOGRAPHIC AND PROPERTY SURVEYS GIVING LOT SIZE, GROUND ELEVATIONS, OBSTRUCTIONS ON SITE, LOCATION AND DEPTHS OF SEWERS, CONDUITS, PIPES, EXISTING STRUCTURES, CURBS, PAVEMENTS, TRACTS, AND SOIL BORING DATA GIVING THE NATURE OF GROUND AND SUBSURFACE CONDITIONS HAVE BEEN OBTAINED FROM RELIABLE SOURCES. THE ACCURACY OF THIS DATA IS NOT GUARANTEED, AND IS FURNISHED SOLELY AS AND ACCOMMODATION TO THE CONTRACTOR. USE OF THIS DATA SHALL BE MADE AT THE CONTRACTOR'S DISCRETION. NO ADDITIONAL COMPENSATION WILL BE GRANTED DUE TO CONTRACTOR'S LACK OF KNOWLEDGE OF SITE CONDITIONS. PRIOR TO BID SUBMISSION, CONDUCT ANY ADDITIONAL SURVEYS AND SOIL TESTS YOU MAY DEEM NECESSARY TO VERIFY THE ACCURACY OF THE INFORMATION PROVIDED.
11. EXISTING WATER SERVICES ENCOUNTERED TO BE REMOVED BACK TO MAIN AND CAPPED OFF.
12. EXOTIC, NUISANCE VEGETATION SHALL BE REMOVED FROM ALL UPLAND AREAS OF THE SITE, AS SHOWN ON THE EXOTIC PLANT SPECIES PLAN, INCLUDING REPLACEMENT, IN ACCORDANCE WITH MANATEE COUNTY REQUIREMENTS.
13. ELEVATIONS BASED ON DNR MONUMENT RM-6 WITH A PUBLISHED ELEVATION OF 4.88 ELEVATIONS SHOWN HAVE BEEN CONVERTED TO NAVD 1988 DATUM USING CORPSCON 6 CONVERSION SOFTWARE.

PROPOSED TYPE III SILT SCREENING, FOR EROSION AND SEDIMENT CONTROL, TO BE INSTALLED PRIOR TO COMMENCEMENT OF CONSTRUCTION (TYP)

CONTRACTOR TO REMOVE EXIST. INACTIVE CONC. BUS STOP

PROPOSED SOIL TRACKING PREVENTION @ CONSTRUCTION ENTRANCE (SEE DETAIL FOR SPECIFICATIONS)

PROPOSED EROSION CONTROL CURB INLET AND INLET GRATE EROSION CONTROL, TO BE INSTALLED PRIOR TO COMMENCEMENT OF CONSTRUCTION (TYP)

COMMON LINE OF LANDS DESCRIBED IN O.R. 893, PG. 787 & O.R. 893, PG. 789

POINT OF BEGINNING

SITE BENCHMARK MAG NAIL W/DISK IN PAVEMENT ELEV.=3.98

SITE BENCHMARK MAG NAIL W/DISK IN PAVEMENT ELEV.=2.01

RECEIVED
AUG 2 8 2024
TOWN OF LONGBOAT KEY
Planning, Zoning & Building

Shroyer Drapala Engineering, LLC

P.O. Box 9282
Bradenton, FL 34206

1111 3rd Ave. W.
Suite 210
Bradenton, FL 34205

Phone: (941) 746-4000
E-Mail: info@ShroyerDrapala.com

Submitted For:

0 30 60 Feet

N

Design By:	Drawn By:	Checked By:
JEC	TMF	JEC
Drawing Scale:		Drawing Date:
1" = 30'		1/20/22

Existing Conditions and ESC Plan

For

Brista Homes

Section 7, Township 36 S, Range 17 E
Town of Longboat Key, Florida

FSP-3

STEVEN J. SHROYER LICENSE No. 32052 STATE OF FLORIDA PROFESSIONAL ENGINEER

Steve Shroyer
PE No. 32052
I attest to the accuracy and integrity of this document
2024.08.13

C:\Users\User\Shroyer Drapala\Projects - Documents\26300 GMD & Buttonwood Dr Property\CADD\Plan Set\3 26300 EX COND-ESCP.dwg May 20, 2024 - 9:46am

3 26300 EX COND-ESCP.DWG

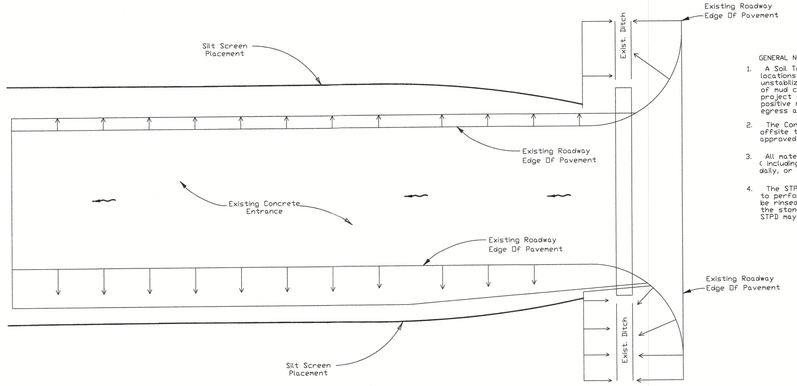

GENERAL NOTES:

1. A Soil Tracking Prevention Device (STPD) shall be constructed at locations designated by the engineer for points of egress from unstabilized areas of the project to public roads where offsite tracking of mud could occur. Traffic from unstabilized areas of the construction project shall be directed thru a STPD. Barriers, flagging, or other positive means shall be used as required to limit and direct vehicular egress across the STPD.
2. The Contractor may propose an alternative technique to minimize offsite tracking of sediment. The alternative must be reviewed and approved by the Engineer prior to its use.
3. All materials spilled, dropped, or tracked onto public roads (including the STPD aggregate and construction mud) shall be removed daily, or more frequently if so directed by the Engineer.
4. The STPD shall be maintained in a condition that will allow it to perform its function. To prevent offsite tracking, the STPD shall be rinsed (daily when in use) to move accumulated mud downward thru the stone. Additional stabilization of the vehicular route leading to the STPD may be required to limit the mud tracked.

Soil Tracking Prevention

N.T.S.

Source: FDOT Index No. 106

PLEASE REFER TO FSP 3 FOR ADDITIONAL EROSION AND SEDIMENT CONTROL PLAN & DETAILS

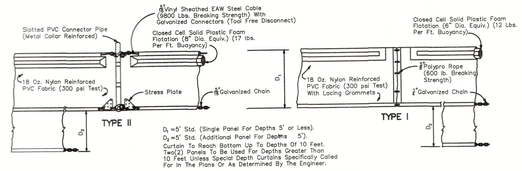

D_1 =5' Std. (Single Panel For Depths 5' or Less).
D_2 =5' Std. (Additional Panel For Depths 5').
Curtain To Reach Bottom Up To Depths Of 10 Feet. Two(2) Panels To Be Used For Depths Greater Than 10 Feet Unless Special Depth Curtains Specifically Called For In The Plans Or As Determined By The Engineer.

NOTICE: COMPONENTS OF TYPES I AND II MAY BE SIMILAR OR IDENTICAL TO PROPRIETARY DESIGNS. ANY INFRINGEMENT ON THE PROPRIETARY RIGHTS OF THE DESIGNER SHALL BE THE SOLE RESPONSIBILITY OF THE USER. SUBSTITUTIONS FOR TYPES I AND II SHALL BE AS APPROVED BY THE ENGINEER.

FLOATING TURBIDITY BARRIERS

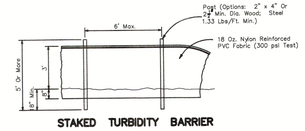

STAKED TURBIDITY BARRIER

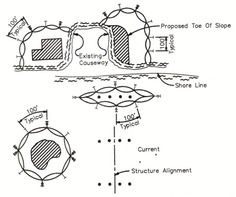

LEGEND
- Pile Locations
- Dredge Or Fill Area
- Mooring Buoy w/Anchor
- Anchor
- Barrier Movement Due To Current Action

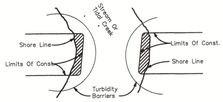

NOTES:
1. Turbidity barriers are to be used in all permanent bodies of water regardless of water depth.
2. Number and spacing of anchors dependent on current velocities.
3. Deployment of barrier around pile locations may vary to accommodate construction operations.
4. Navigation may require segmenting barrier during construction operations.
5. For additional information see Section 104 of the Standard Specifications.

Note:
Turbidity barriers for flowing streams and tidal creeks may be either floating, or staked types or any combinations of types that will suit site conditions and meet erosion control and water quality requirements. The barrier type(s) will be at the Contractors option unless otherwise specified in the plans, however payment will be under the pay item(s) established in the plans for Floating Turbidity Barrier and/or Staked Turbidity Barrier. Posts in staked turbidity barriers to be installed in vertical position unless otherwise directed by the Engineer.

GENERAL NOTES

1. Floating turbidity barriers are to be paid for under the contract unit price for Floating Turbidity Barrier, LF.
2. Staked turbidity barriers are to be paid for under the contract unit price for Staked Turbidity Barrier, LF.

TURBIDITY BARRIER APPLICATIONS

Turbidity Barriers

N.T.S.

Source: FDOT Index No. 103

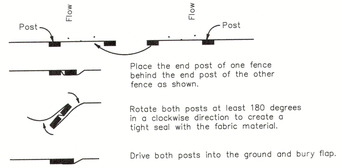

PLAN VIEW

JOINING TWO SILT FENCES

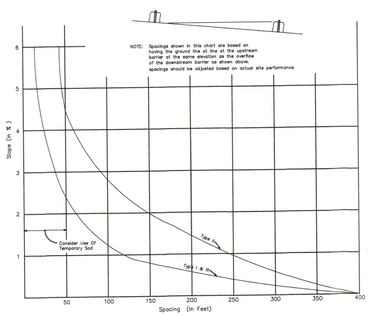

CHART 1

RECOMMENDED SPACING FOR BALED HAY BARRIERS, AND TYPE III SILT FENCES

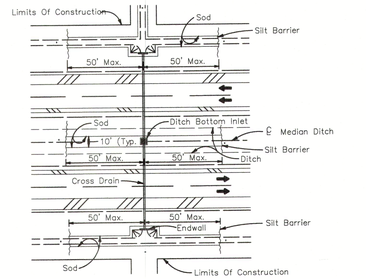

DITCH INSTALLATIONS AT DRAINAGE STRUCTURES

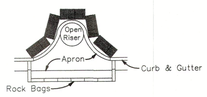

PARTIAL INLET

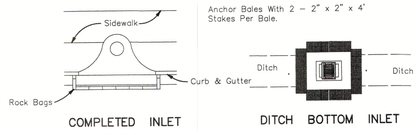

COMPLETED INLET

DITCH BOTTOM INLET

PROTECTION AROUND INLETS OR SIMILAR STRUCTURES

Temporary Erosion and Sediment Control

N.T.S.

Source: FDOT Index No. 103

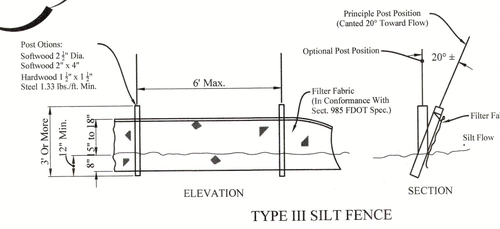

TYPE III SILT FENCE

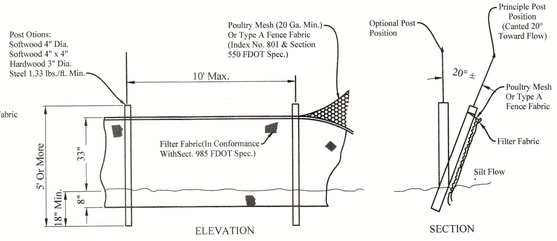

TYPE IV SILT FENCE

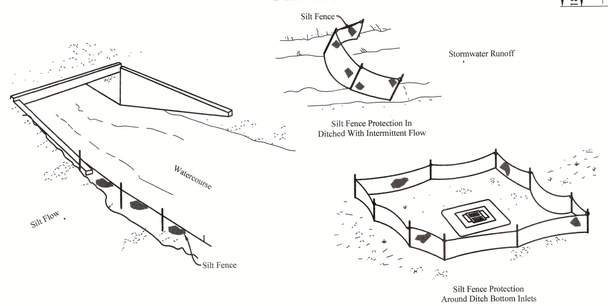

SILT FENCE APPLICATIONS

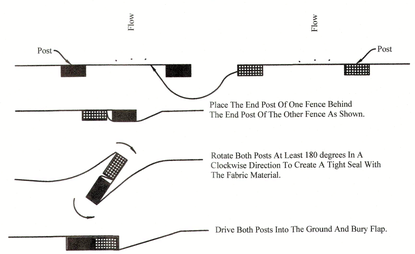

PLAN VIEW

JOINING TWO SILT FENCES

NOTES FOR SILT FENCES

1. Type III Silt Fence to be used at most locations. Where used in ditches, the spacing for Type III Silt fence shall be in accordance with Chart 1, Sheet 1.
2. Type IV Silt Fence to be used where large sediment loads are anticipated. Suggested use is where fill slope is 1:2 or steeper and length of slope exceeds 25 feet. Avoid use where the detained water may back into travel lanes or off the right of way.
3. Do not construct silt fences across permanent flowing watercourses. Silt fences are to be at upland locations and turbidity barriers used at permanent bodies of water.
4. Where used as slope protection, Silt Fence is to be constructed on 0% longitudinal grade to avoid channelizing runoff along the length of the fence.
5. Silt Fence to be paid for under the contract unit price for Sediment Barrier, (LF).

RECEIVED
AUG 2 8 2024
TOWN OF LONGBOAT KEY
Planning, Zoning & Building

Type III and Type IV Temporary Erosion and Sediment Control

01/01/10

N.T.S.

Source: FDOT Index No. 102

Shroyer Drapala Engineering, LLC
P.O. Box 9282
Bradenton, FL 34206
1111 3rd Ave. W.
Suite 210
Bradenton, FL 34205
Phone: (941) 746-4000
E-Mail: info@ShroyerDrapala.com

Submitted For:

Design By:	Drawn By:	Checked By:
JEC	TMF	JEC
Drawing Scale:		Drawing Date:
N.T.S.		1/20/22

ESC Plan Details
For
Brista Homes

Section 7, Township 36 S, Range 17 E
Town of Longboat Key, Florida

FSP-4

STEVE J. SHROYER LICENSE NO. 32052 STATE OF FLORIDA PROFESSIONAL ENGINEER

Steve Shroyer PE No. 32052 I attest to the accuracy and integrity of this document 2024.08.13

F:\PROJECTS\26300 GMD & Buttonwood Dr Property\CADD\Plan Set\4-5 26300 ESCP DETAILS.dwg January 05, 2022 – 1:33pm

4-5 26300 ESCP DETAILS.DWG

EROSION AND SEDIMENT CONTROL PLAN

Project Name: Brista Homes
MC Number: -
SDE Project Number: 23600

Pursuant to Section 508.3.4.7.j. of the Land Development Code (LDC) states Prior to commencement of construction activities authorized with final site plan and construction plan approvals pursuant to this Code, the developer shall be required to submit an Erosion and Sediment Control Plan (ESCP) to the EMD for review and approval. The plan shall identify construction sequencing, Best Management Practices (BMPs) to minimize erosion and sedimentation and to manage the quality and quantity of stormwater runoff during and after construction, and other practices employed to minimize fugitive particulate emissions during and after construction. Generally, project that are greater than five (5) acres and smaller projects with major land disturbances, (i.e., stockpiling, excavation of oversized lakes, filling of lots, etc.) are subject to this requirement. Redevelopment projects or projects with minor improvements may not be subject to this requirement. The EMD Director or designee may, at his/her discretion, waive this requirement on a case by case basis. The ESCP shall at a minimum include the following information:

The required information for the ESCP is as follows (additional material and information may be required pursuant to Section 508.3.4.7.k.):

Item	Description	Response/Location
1.	Details of construction sequencing, dewatering activities and sump locations, stockpile areas and/or deposition areas for excavation materials.	**The project will be constructed completely from start to finish. Please refer to the "General Notes" and "Demolition & Erosion and Control Plan", for more detail.**
a.	Description of land clearing/disturbing activities, existing site conditions and adjacent land uses/areas that might be affected by land clearing/disturbances.	**Please refer to the "Demolition & Erosion and Control Plan" for more detail.**
b.	Identification of stockpile areas and/or deposition areas for excavated materials.	**Please refer to the "General Notes" and "Demolition & Erosion and Control Plan".**
c.	Description of potential onsite problem areas such as steep grade changes, highly erodible soils, areas adjacent to wetlands, surface waters, or upland preservation areas.	**The existing offsite conditions shall be protected by silt screen and turbidity barriers, as identified on the "Demolition & Erosion and Control Plan".**
d.	Construction scheduling, including the expected starting and stabilization dates.	**Expected start date: March 2021** **Expected end date: March 2023**
e.	Identification of disturbed areas where construction will not be ongoing, and final grade will not be achieved within fourteen (14) days, and an indication of temporary stabilization measures.	**Construction, following commencement, will be completed without interruption.**
2.	Details of Best Management Practices and Fugitive Particulate Abatement Methods.	**Please refer to the details on "General Notes" and "Demolition & Erosion and Control Plan"**
a.	Details, drawings and cross-sections of erosion and sediment control devices, if different from the approved Final Site Plan/Construction Plans, and when they will be installed.	**Please refer to the "Demolition & Erosion and Control Plan" and "Erosion and Sediment Control Details".**
b.	Maintenance program for erosion and sediment control devices including inspection frequency and maintenance activities.	**Please refer to the "Demolition & Erosion and Control Plan" and the details on "General Notes", sheet FSP 2, for more information. Please note that the contractor will be responsible for any site inspections and report forms one a week and within 24 hours of a storm event, as specified on sheet FSP 2.**
c.	Haul routes and details of apron stabilization at ingress/egress points to rights-of-way.	**Please refer to the "Demolition & Erosion and Control Plan" and "Erosion and Sediment Control Details".**
d.	Details/location of equipment washing area.	**Equipment to be washed onsite, within existing stormwater management basins and away from any wetlands or other areas where direct runoff is not advisable.**
e.	Contractor information, including a 24-hour, 7-day contact and phone numbers.	**Information will be provided when contractor is chosen.**
3.	Details of dewatering activities and locations, drawings and cross-sections of dewatering sumps.	**Please refer to the "Demolition & Erosion and Control Plan" and "Erosion and Sediment Control Details".**
4.	Water Quality Monitoring Plan and monitoring stations (if applicable). The developer shall be responsible for scheduling an onsite meeting with staff from the Environmental Management and Project Management Departments, the Engineer of Record and the Contractor. Final approval of the ESCP and authorization of construction will be granted only after an onsite meeting has been conducted. necessary revisions, as determined by EMD staff, shall be made prior to final approval of the ESCP. Any changes to the approved ESCP must be submitted to the EMD by the Engineer of Record for review and approval prior to implementation. Changes that qualify as an amendment to the final site plan and/or construction plans must be approved by the Planning Department prior to implementation. Prior to scheduling the onsite meeting the developer shall: 1. Obtain all applicable approvals (Final Site Plan, Construction Plans, Environmental Resource Permit and NPDES Permit). 2. Stake the boundaries of the wetland buffers, upland preservation areas or other environmentally sensitive areas, as indicated on the approved Final Site Plan/Construction Plans. 3. Stake all silt screen locations every one hundred (100) feet, as indicated on the approved Final Site Plan/Construction Plans.	**Acknowledged.**

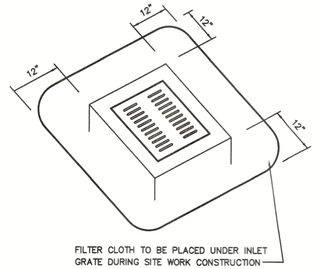

NOTE: HAY BALES SURROUNDING ENTIRE PERIMETER OF INLET MAY BE SUBSTITUTED FOR FILTER CLOTH

Inlet Debris Control Screen
N.T.S.

RECEIVED
AUG 2 8 2024
TOWN OF LONGBOAT KEY
Planning, Zoning & Building

Shroyer Drapala Engineering, LLC
P.O. Box 9282, Bradenton, FL 34206
1111 3rd Ave. W. Suite 210, Bradenton, FL 34205
Phone: (941) 746-4000
E-Mail: info@ShroyerDrapala.com

Submitted For:

Design By:	Drawn By:	Checked By:
JEC	TMF	JEC
Drawing Scale:	Drawing Date:	
N.T.S.	1/20/22	

ESC Plan Details For Brista Homes

Section 7, Township 36 S, Range 17 E
Town of Longboat Key, Florida

FSP-5

STEVE J. SHROYER LICENSE No. 32052 STATE OF FLORIDA PROFESSIONAL ENGINEER

Steve Shroyer
PE No. 32052
I attest to the accuracy and integrity of this document
2024.08.13

F:\PROJECTS\26300 GMD & Buttonwood Dr Property\CADD\Plan Set\4-5 26300 ESCP DETAILS.dwg January 05, 2022 - 1:33pm

4-5 26300 ESCP DETAILS.DWG

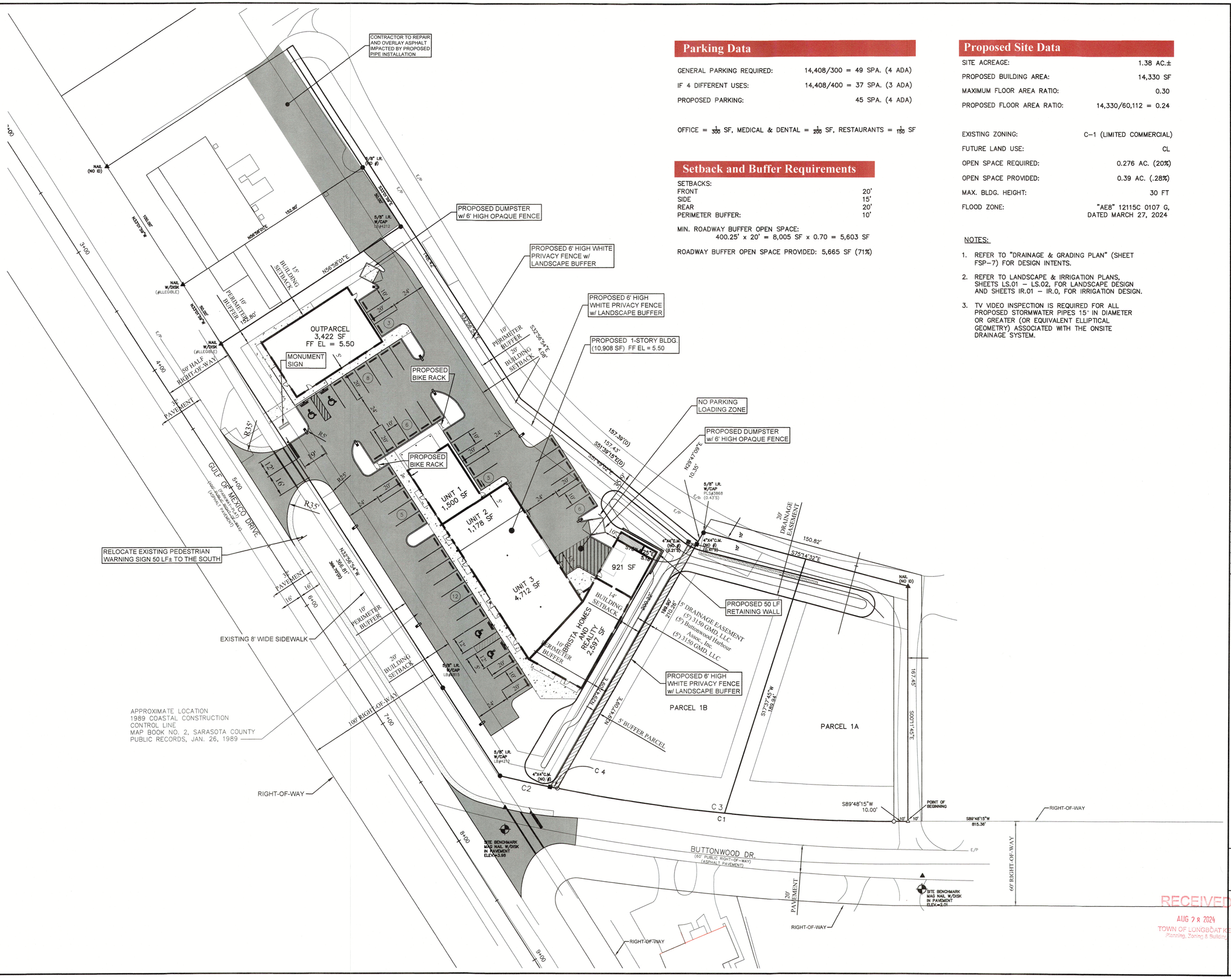

Parking Data

GENERAL PARKING REQUIRED:	14,408/300 = 49 SPA. (4 ADA)
IF 4 DIFFERENT USES:	14,408/400 = 37 SPA. (3 ADA)
PROPOSED PARKING:	45 SPA. (4 ADA)

OFFICE = $\frac{1}{300}$ SF, MEDICAL & DENTAL = $\frac{1}{200}$ SF, RESTAURANTS = $\frac{1}{150}$ SF

Setback and Buffer Requirements

SETBACKS:	
FRONT	20'
SIDE	15'
REAR	20'
PERIMETER BUFFER:	10'

MIN. ROADWAY BUFFER OPEN SPACE:
400.25' x 20' = 8,005 SF x 0.70 = 5,603 SF

ROADWAY BUFFER OPEN SPACE PROVIDED: 5,665 SF (71%)

Proposed Site Data

SITE ACREAGE:	1.38 AC.±
PROPOSED BUILDING AREA:	14,330 SF
MAXIMUM FLOOR AREA RATIO:	0.30
PROPOSED FLOOR AREA RATIO:	14,330/60,112 = 0.24
EXISTING ZONING:	C-1 (LIMITED COMMERCIAL)
FUTURE LAND USE:	CL
OPEN SPACE REQUIRED:	0.276 AC. (20%)
OPEN SPACE PROVIDED:	0.39 AC. (.28%)
MAX. BLDG. HEIGHT:	30 FT
FLOOD ZONE:	"AE8" 12115C 0107 G, DATED MARCH 27, 2024

NOTES:

1. REFER TO "DRAINAGE & GRADING PLAN" (SHEET FSP-7) FOR DESIGN INTENTS.
2. REFER TO LANDSCAPE & IRRIGATION PLANS, SHEETS LS.01 – LS.02, FOR LANDSCAPE DESIGN AND SHEETS IR.01 – IR.0, FOR IRRIGATION DESIGN.
3. TV VIDEO INSPECTION IS REQUIRED FOR ALL PROPOSED STORMWATER PIPES 15" IN DIAMETER OR GREATER (OR EQUIVALENT ELLIPTICAL GEOMETRY) ASSOCIATED WITH THE ONSITE DRAINAGE SYSTEM.

Shroyer Drapala Engineering, LLC
P.O. Box 9282, Bradenton, FL 34206
1111 3rd Ave. W. Suite 210, Bradenton, FL 34205
Phone: (941) 746-4000
E-Mail: info@ShroyerDrapala.com

Submitted For:

0 30 60 Feet

N

Design By:	Drawn By:	Checked By:
JEC	TMF	JEC
Drawing Scale:		Drawing Date:
1" = 30'		1/20/22

Final Site Plan
For
Brista Homes

Section 7, Township 36 S, Range 17 E
Town of Longboat Key, Florida

FSP-6

RECEIVED
AUG 2 8 2024
TOWN OF LONGBOAT KEY
Planning, Zoning & Building

STEVE J. SHROYER LICENSE No. 32052 STATE OF FLORIDA PROFESSIONAL ENGINEER

Steve Shroyer PE No. 32052 I attest to the accuracy and integrity of this document 2024.08.13

C:\Users\User\Shroyer Drapala\Projects – Documents\26300 GMD & Buttonwood Dr Property\CADD\Plan Set\6 26300 FSP.dwg August 13, 2024 – 9:45am

Basin Summary	
Total Basin Area	1.55 Acre
Treat Basin Area	1.38 Acre

Impervious Area	
Building	0.33 Acre
Exist Pavement	0.58 Acre
Exist Conc & Swk	0.08 Acre
Total Existing	0.99 Acre

Total Imperv. = 0.99 Ac (71.74%)

Proposed Site Data

SITE ACREAGE:	1.38 AC.±
PROPOSED BUILDING AREA:	14,408 SF
MAXIMUM FLOOR AREA RATIO:	0.30
PROPOSED FLOOR AREA RATIO:	14,408/60,112 = 0.24
EXISTING ZONING:	C-1 (LIMITED COMMERCIAL)
FUTURE LAND USE:	CL
OPEN SPACE REQUIRED:	0.276 AC. (20%)
OPEN SPACE PROVIDED:	0.39 AC. (.28%)
MAX. BLDG. HEIGHT:	30 FT
FLOOD ZONE:	"AE8" 12115C 0107 G, DATED MARCH 27, 2024

Shroyer Drapala Engineering, LLC — **Post Design Dry Treatment Volume**

Project Name:	Brista Homes Plaza	**Project #:**	23600.00
Project Address:	3150 Gulf of Mexico Drive, Longboat Key	**Parcel ID:**	
Description:	Proposed required Water Quality Treament Volume		

Basin Area = 1.38 AC. **Treat Depth =** 0.75 In. **Total Treatment Volume Required =** 3757 CF | 0.086 Ac-Ft

Post Dry Retention Treatment Volume

Retention Area	Area	Elev	Slope
Top Elevation	0.1590	4.50	3.0
DHW Elev. (25 Yr)	0.1210	3.87	3.0
Water Quality Elev.	0.1040	3.65	3.0
Bottom Elev.	0.0470	2.50	3.0

Treatment Volume Provided : 0.087 Ac-Ft | 3782 CF | Sufficient Treatment

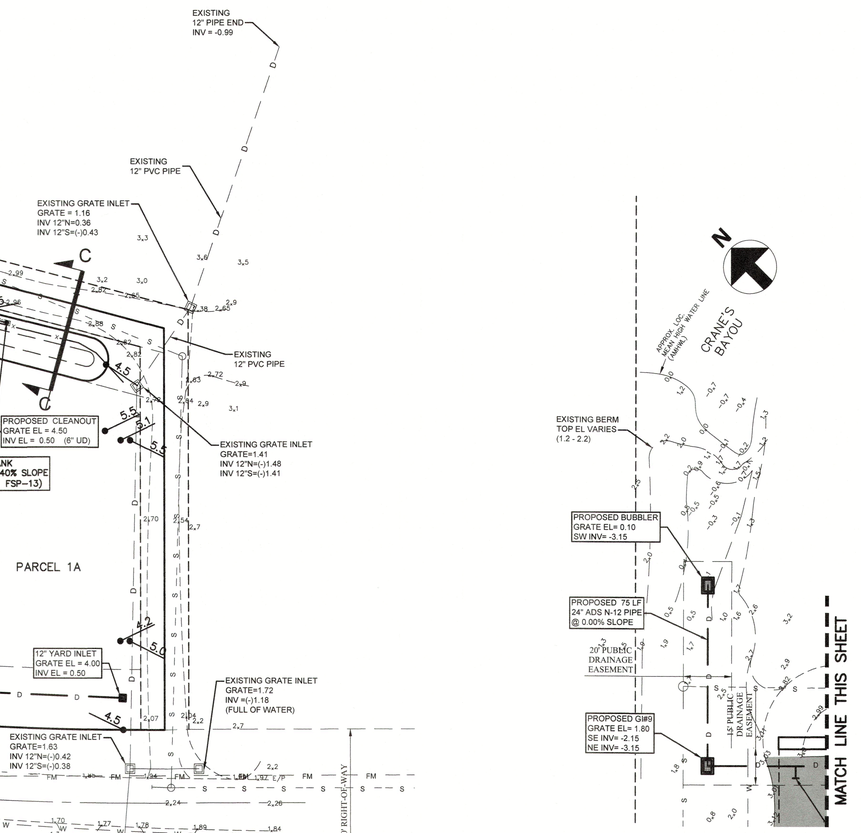

Offsite Drainage Discharge

Scale: 1"=30'

NOTE:

1. THE PROPOSED STORMWATER DESIGN MODEL UTILIZES A VARIABLE TIDE TAILWATER CONDITION, FROM ELEVATION 0.25 TO 1.80. THE PROPOSED MAXIMUM 100YR DHWL IS ELEVATION 2.97, WITH TOP OF BANK ELEVATION OF 4.50, THUS THERE IS NO PROPOSED OVERFLOW TO ADJACENT PROPERTIES.

RECEIVED
AUG 2 8 2024
TOWN OF LONGBOAT KEY
Planning, Zoning & Building

Shroyer Drapala Engineering, LLC

P.O. Box 9282, Bradenton, FL 34206
1111 3rd Ave. W. Suite 210, Bradenton, FL 34205
Phone: (941) 746-4000
E-Mail: info@ShroyerDrapala.com

Submitted For:

0 30 60 Feet

Design By:	Drawn By:	Checked By:
JEC	TMF	JEC
Drawing Scale:		Drawing Date:
1" = 30'		1/20/22

Drainage and Grading Plan
For
Brista Homes

Section 7, Township 36 S, Range 17 E
Town of Longboat Key, Florida

FSP-7

STEVE J. SHROYER LICENSE No. 32052 STATE OF FLORIDA PROFESSIONAL ENGINEER

Steve Shroyer
PE No. 32052
I attest to the accuracy and integrity of this document
2024.08.13

C:\Users\User\Shroyer Drapala\Projects - Documents\26300 GMD & Buttonwood Dr Property\CADD\Plan Set\7 26300 DRAINAGE PLAN.dwg August 13, 2024 - 9:53am

7 26300 DRAINAGE PLAN.DWG

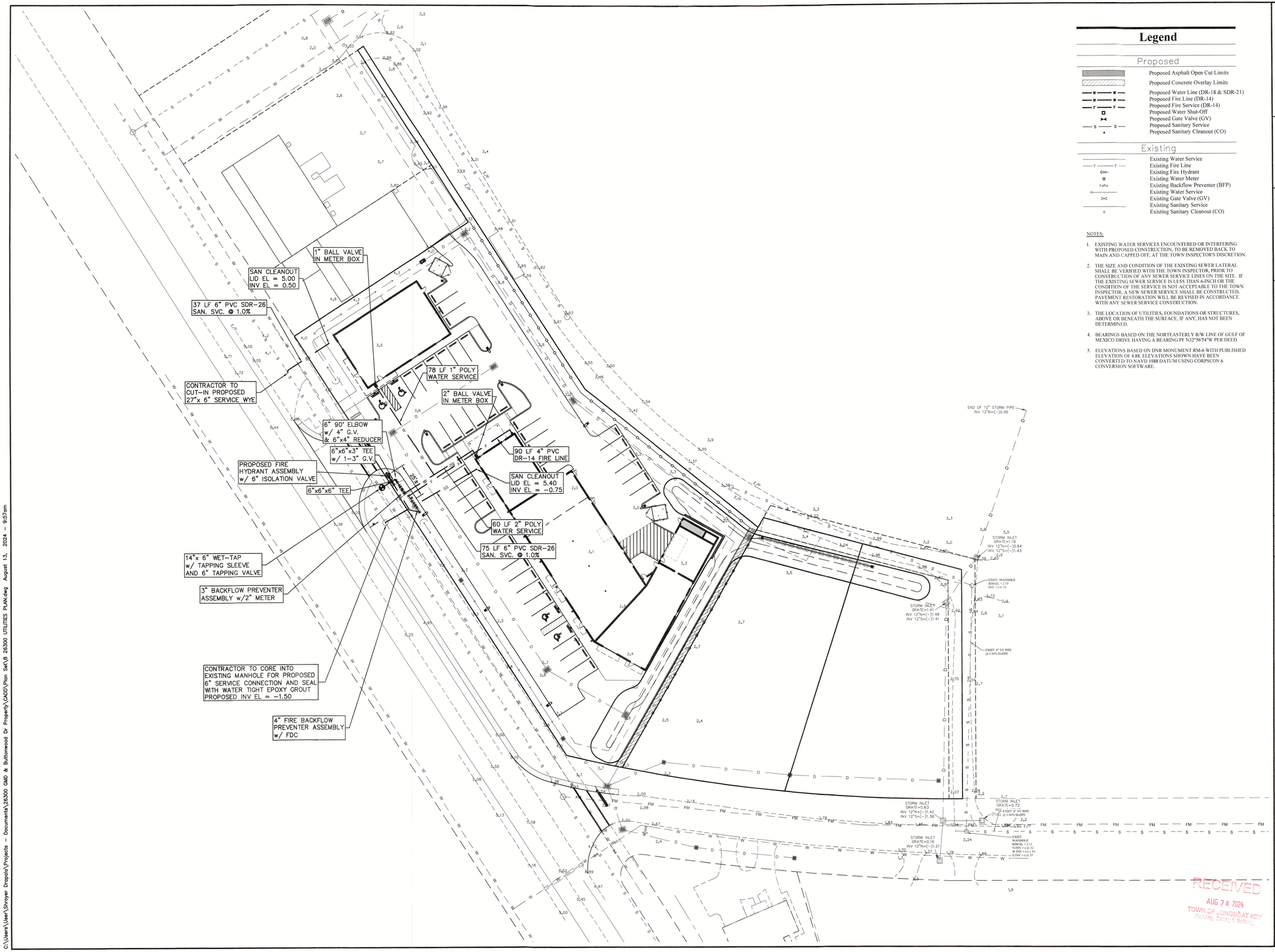

Legend

Proposed

- Proposed Asphalt Open Cut Limits
- Proposed Concrete Overlay Limits
- Proposed Water Line (DR-18 & SDR-21)
- Proposed Fire Line (DR-14)
- Proposed Fire Service (DR-14)
- Proposed Water Shut-Off
- Proposed Gate Valve (GV)
- Proposed Sanitary Service
- Proposed Sanitary Cleanout (CO)

Existing

- Existing Water Service
- Existing Fire Line
- Existing Fire Hydrant
- Existing Water Meter
- Existing Backflow Preventer (BFP)
- Existing Water Service
- Existing Gate Valve (GV)
- Existing Sanitary Service
- Existing Sanitary Cleanout (CO)

NOTES:

1. EXISTING WATER SERVICES ENCOUNTERED OR INTERFERING WITH PROPOSED CONSTRUCTION, TO BE REMOVED BACK TO MAIN AND CAPPED OFF, AT THE TOWN INSPECTOR'S DISCRETION.
2. THE SIZE AND CONDITION OF THE EXISTING SEWER LATERAL SHALL BE VERIFIED WITH THE TOWN INSPECTOR, PRIOR TO CONSTRUCTION OF ANY SEWER SERVICE LINES ON THE SITE. IF THE EXISTING SEWER SERVICE IS LESS THAN 6-INCH OR THE CONDITION OF THE SERVICE IS NOT ACCEPTABLE TO THE TOWN INSPECTOR, A NEW SEWER SERVICE SHALL BE CONSTRUCTED. PAVEMENT RESTORATION WILL BE REVISED IN ACCORDANCE WITH ANY SEWER SERVICE CONSTRUCTION.
3. THE LOCATION OF UTILITIES, FOUNDATIONS OR STRUCTURES, ABOVE OR BENEATH THE SURFACE, IF ANY, HAS NOT BEEN DETERMINED.
4. BEARINGS BASED ON THE NORTEASTERLY R/W LINE OF GULF OF MEXICO DRIVE HAVING A BEARING PF N32°56'54"W PER DEED.
5. ELEVATIONS BASED ON DNR MONUMENT RM-6 WITH PUBLISHED ELEVATION OF 4.88. ELEVATIONS SHOWN HAVE BEEN CONVERTED TO NAVD 1988 DATUM USING CORPSCON 6 CONVERSION SOFTWARE.

Shroyer Drapala Engineering, LLC
P.O. Box 9282, Bradenton, FL 34206
1111 3rd Ave. W. Suite 210, Bradenton, FL 34205
Phone: (941) 746-4000
E-Mail: info@ShroyerDrapala.com

Submitted For:

0 30 60 Feet

N

Design By:	Drawn By:	Checked By:
JEC	TMF	JEC
Drawing Scale:		Drawing Date:
1" = 30'		1/20/22

Utilities Plan
For
Brista Homes

Section 7, Township 36 S, Range 17 E
Town of Longboat Key, Florida

FSP-8

STEVE J. SHROYER LICENSE No. 32052 STATE OF FLORIDA PROFESSIONAL ENGINEER

Steve Shroyer PE No. 32052 I attest to the accuracy and integrity of this document 2024.08.13

C:\Users\User\Shroyer Drapala\Projects - Documents\26300 GMD & Buttonwood Dr Property\CAD\Plan Set\8 26300 UTILITIES PLAN.dwg August 13, 2024 - 9:57am

8 26300 UTILITIES PLAN.DWG

Parking Data

GENERAL PARKING REQUIRED: 14,408/300 = 49 SPA. (4 ADA)

IF 4 DIFFERENT USES: 14,408/400 = 37 SPA. (3 ADA)

PROPOSED PARKING: 44 SPA. (4 ADA)

OFFICE = $\frac{1}{300}$ SF, MEDICAL & DENTAL = $\frac{1}{200}$ SF, RESTAURANTS = $\frac{1}{150}$ SF

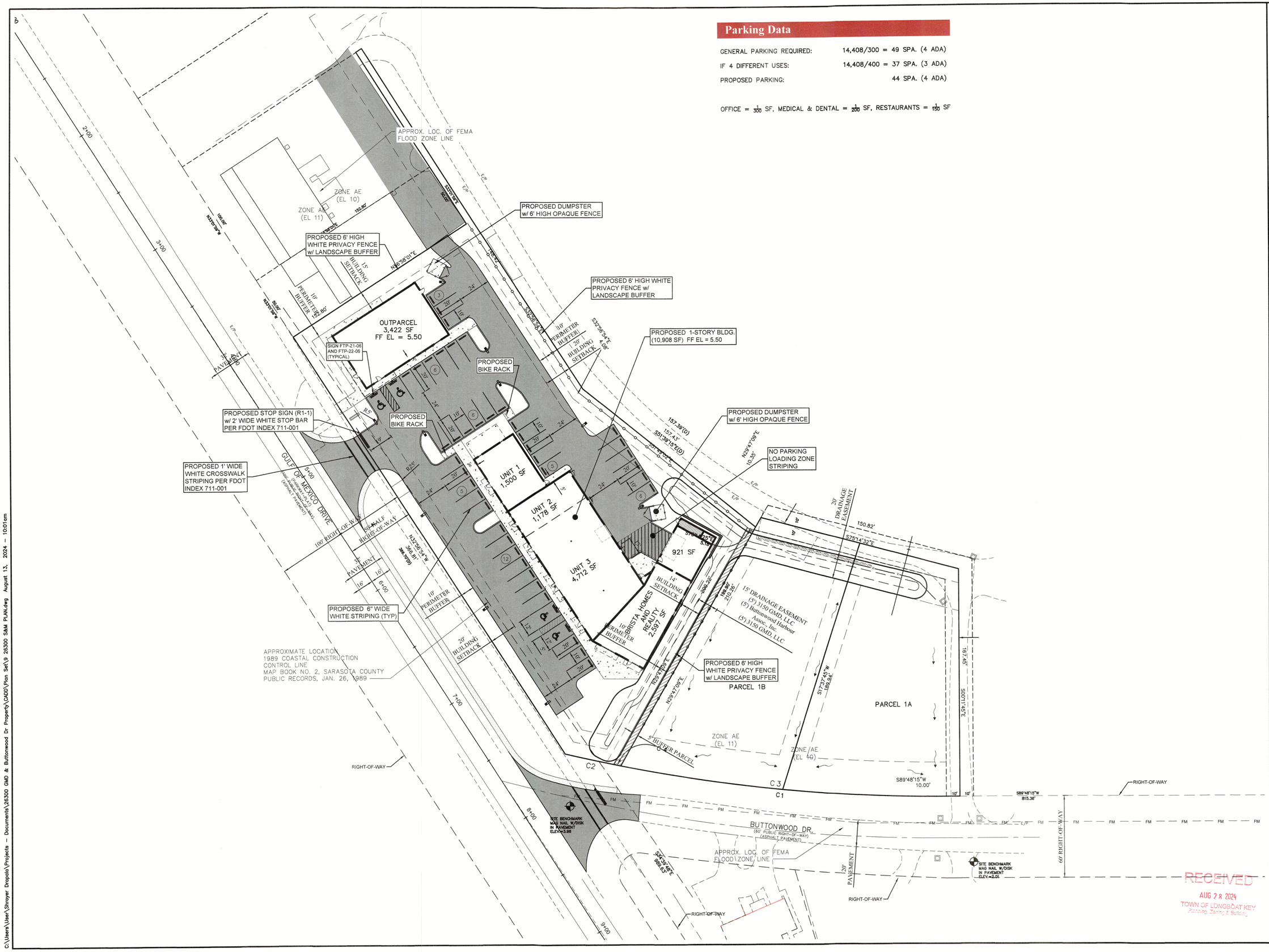

RECEIVED
AUG 2 8 2024
TOWN OF LONGBOAT KEY
Planning, Zoning & Building

Shroyer Drapala Engineering, LLC

P.O. Box 9282
Bradenton, FL 34206

1111 3rd Ave. W.
Suite 210
Bradenton, FL 34205

Phone: (941) 746-4000
E-Mail: info@ShroyerDrapala.com

Submitted For:

0 30 60 Feet

N

Design By:	Drawn By:	Checked By:
JEC	TMF	JEC
Drawing Scale:		Drawing Date:
1" = 30'		1/20/22

Signage and Marking Plan
For
Brista Homes

Section 7, Township 36 S, Range 17 E
Town of Longboat Key, Florida

FSP-9

STEVE J. SHROYER LICENSE NO. 32052 STATE OF FLORIDA PROFESSIONAL ENGINEER

Steve Shroyer
PE No. 32052
I attest to the accuracy and integrity of this document
2024.08.13

C:\Users\User\Shroyer Dropala\Projects - Documents\26300 GMD & Buttonwood Dr Property\CADD\Plan Set\9 26300 S&M PLAN.dwg August 13, 2024 - 10:01am

9 26300 S&M PLAN.DWG

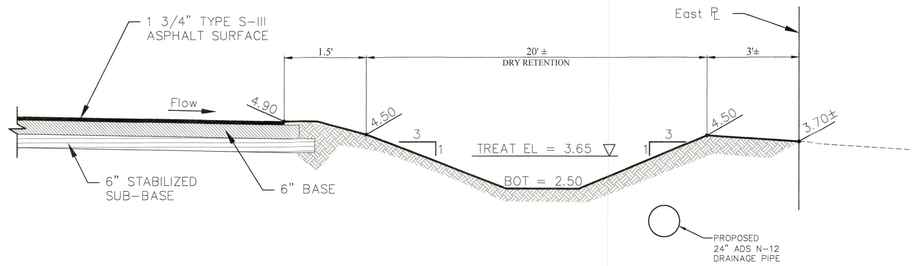

Section A–A

N.T.S.

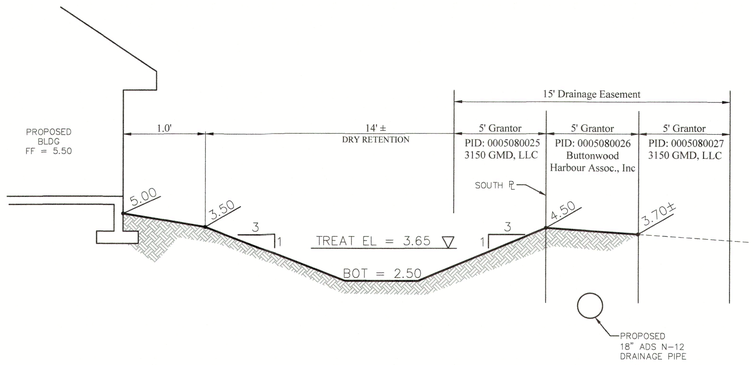

Section B–B

N.T.S.

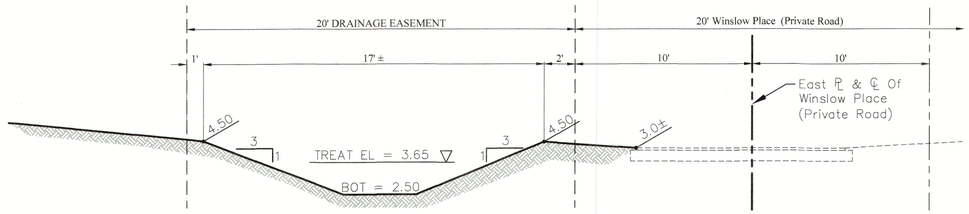

Section C–C

N.T.S.

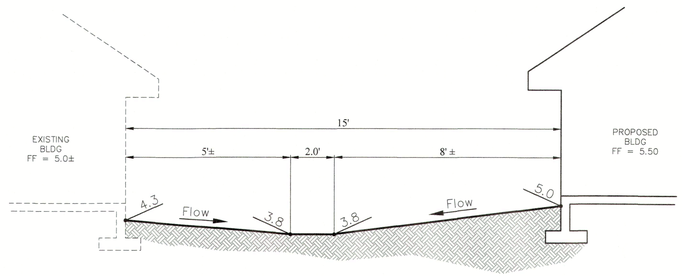

Section D–D

N.T.S.

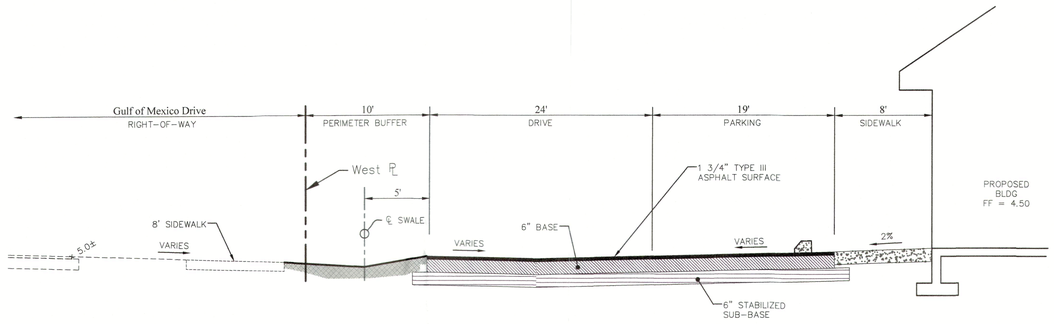

NOTES:

CONTRACTOR SHALL PROVIDE 6" TOP SOIL (SANDY LOAM) OVER ALL PERVIOUS SURFACES THROUGHOUT THE SITE

CONTRACTOR IS RESPONSIBLE FOR PERFORMING ALL TESTING, FOR INFORMATION SHOWN ON THESE PLANS, AND AS RECOMMENDED IN THE GEOTECHNICAL REPORT

Section E–E

N.T.S.

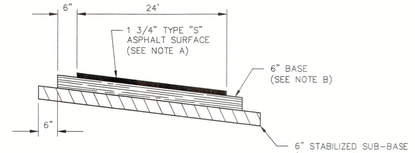

NOTES:

A. Asphaltic concrete surface course shall be layed in two lifts. The first lift shall be 1" Type S-I or S-III. The second lift shall be 3/4" Type S-III.

B. Base course shall consist of 6" limerock compacted to 98% modified proctor density or 6" Cement Treated Caloosahatchee shell compacted to 98% AASHTO T-180 density LBR 100 or 6" crushed concrete base.

C. 6" stabilized sub-base shell marl blended with sandy sub-grade minimum LBR 40, 98% T180 AASHTO.

D. No portion of drainage pipe shall be allowed in sub-base. 12"minimum cover is required on storm drain.

E. Laboratory tests are required to substantiate structural section design. Specifications shown on this sheet are minimum requirements.

Pavement Detail

N.T.S. Source: SDE

RECEIVED
AUG 2 8 2024
TOWN OF LONGBOAT KEY
Planning, Zoning & Building

Shroyer Drapala Engineering, LLC
P.O. Box 9282, Bradenton, FL 34206
1111 3rd Ave. W. Suite 210, Bradenton, FL 34205
Phone: (941) 746-4000
E-Mail: info@ShroyerDrapala.com

Submitted For:

Design By:	Drawn By:	Checked By
JEC	TMF	JEC
Drawing Scale:		Drawing Date:
1" = 30'		1/20/22

Cross Sections For Brista Homes

Section 7, Township 36 S, Range 17 E
Town of Longboat Key, Florida

FSP-10

STEVE J. SHROYER LICENSE No. 32052 STATE OF FLORIDA PROFESSIONAL ENGINEER

Steve Shroyer
PE No. 32052
I attest to the accuracy and integrity of this document
2024.08.13

C:\Users\User\Shroyer Drapala\Projects - Documents\26300 GMD & Buttonwood Dr Property\CADD\Plan Set\10 26300 SECTIONS.dwg May 16, 2024 - 4:35pm

10 26300 SECTIONS.DWG

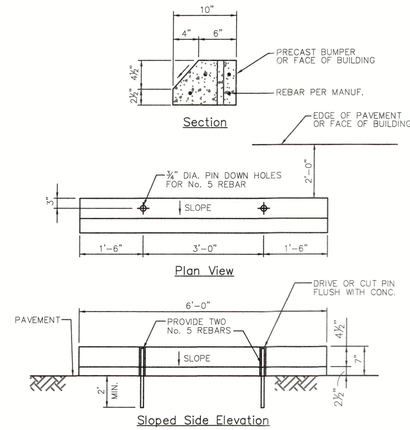

Concrete Wheel Stop

N.T.S. Source: SDE

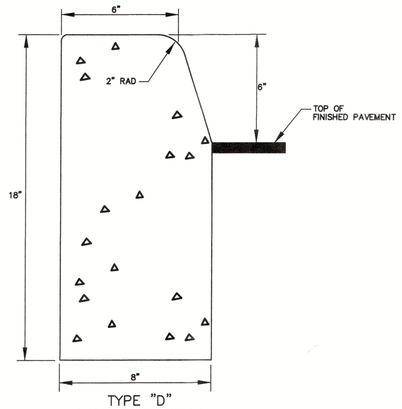

TYPE "D" HIGH BACK CURB

A) CLASS 1 CONCRETE, 3,000 P.S.I. AT 28 DAYS.

B) CURB SHALL MEET THE SPECIFICATIONS ESTABLISHED BY F.D.O.T. STANDARD SPECIFICATIONS PER F.D.O.T. ROADWAY AND TRAFFIC DESIGN STANDARDS INDEX NO. 300, LATEST REVISION.

Type "D" Curb

N.T.S.

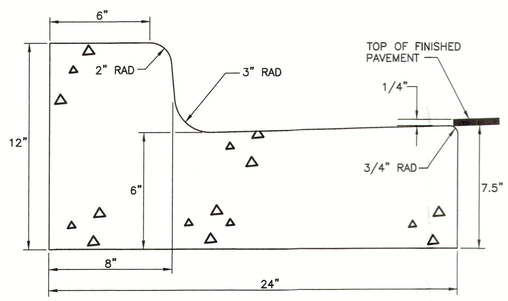

TYPE "F" BARRIER CURB & GUTTER

A) CLASS 1 CONCRETE 3,000 P.S.I. AT 28 DAYS.

B) CURB AND GUTTER SHALL MEET THE SPECIFICATIONS ESTABLISHED BY FLORIDA D.O.T. STANDARD SPECIFICATIONS PER F.D.O.T. ROADWAY AND TRAFFIC DESIGN STANDARDS INDEX NO. 300, LATEST REVISION.

Type "F" Curb and Gutter

N.T.S.

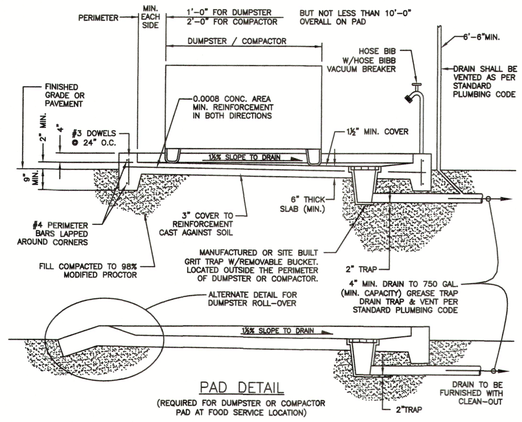

PAD DETAIL
(REQUIRED FOR DUMPSTER OR COMPACTOR PAD AT FOOD SERVICE LOCATION)

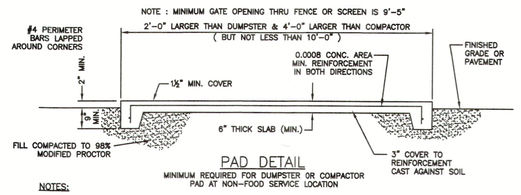

PAD DETAIL
MINIMUM REQUIRED FOR DUMPSTER OR COMPACTOR PAD AT NON-FOOD SERVICE LOCATION

NOTES:

1. DUMPSTER PAD SHALL BE CLASS I CONCRETE W/ MIN. COMP. STRENGTH f'c= 3000 P.S.I. & MIN. REINFORCEMENT STRENGTH fy= 60,000 P.S.I.
2. DUMPSTER PAD SHALL BE FENCED IN ACCORDANCE WITH THE MANATEE COUNTY LAND DEVELOPEMENT CODE.

Compactor and Dumpster Pads Detail

N.T.S.

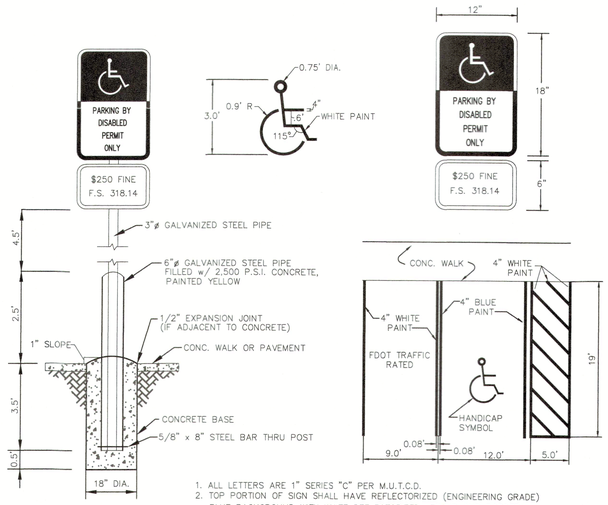

1. ALL LETTERS ARE 1" SERIES "C" PER M.U.T.C.D.
2. TOP PORTION OF SIGN SHALL HAVE REFLECTORIZED (ENGINEERING GRADE) BLUE BACKGROUND WITH WHITE REFLECTORIZED LEGEND AND BORDER.
3. BOTTOM PORTION OF SIGN SHALL HAVE A REFLECTORIZED (ENGINEERING GRADE) WITH BACKGROUND WITH BLACK OPAQUE LEGEND AND BORDER.
4. FINE NOTIFICATION SIGN SHALL HAVE A REFLECTORIZED (ENGINEERING GRADE) WHITE BACKGROUND WITH BLACK OPAQUE LEGEND & BORDER.
5. ONE (1) SIGN REQUIRED FOR EACH PARKING SPACE.
6. INSTALLATION HEIGHT OF SIGN SHALL BE IN ACCORDANCE WITH SECTION 24-23 OF THE MANUAL ON UNIFORM TRAFFIC CONTROL (M.U.T.C.D.)

Handicap Parking Detail

N.T.S.

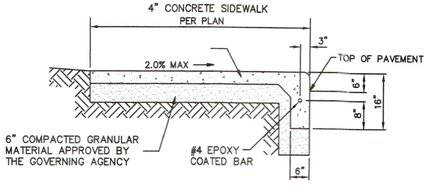

NOTE:
WHERE THE CURB HEIGHT IS BEING REDUCED FOR ADA RAMPS THE RE-BAR SHALL HAVE A MINIMUM OF 3 INCHES OF COVER BELOW THE TOP OF CURB

Integral Curb/Sidewalk Detail

N.T.S. SDE

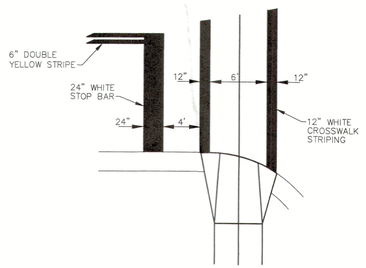

Crosswalk Striping Detail

N.T.S.

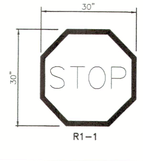

Site Sign Detail

N.T.S.

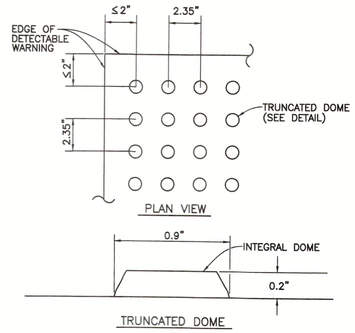

CURB RAMP DETECTABLE WARNING DETAIL

NOTES:

DETECTABLE WARNINGS ON WALKING SURFACES

THE DETECTABLE WARNING SHALL EXTEND THE FULL WIDTH AND DEPTH OF THE CURB RAMP.

DETECTABLE WARNINGS SHALL CONSIST OF RAISED TRUNCATED DOMES WITH A DIAMETER OF NOMINAL 0.9 INCH, A HEIGHT OF NOMINAL 0.2 INCH AND A CENTER-TO-CENTER SPACING OF NOMINAL 2.35 INCH AND SHALL CONTRAST VISUALLY WITH ADJOINING SURFACES, EITHER LIGHT-ON-DARK, OR DARK-ON-LIGHT.

THE MATERIAL USED TO PROVIDE CONTRAST SHALL BE AN INTEGRAL PART OF THE WALKING SURFACE. DETECTABLE WARNINGS USED ON INTERIOR SURFACES SHALL DIFFER FROM ADJOINING WALKING SURFACES IN RESILIENCY OR SOUND-ON-CANE CONTACT.

THE MATERIAL USED TO PROVIDE CONTRAST SHOULD CONTRAST BY AT LEAST 70%. CONTRAST IN PERCENT IS DETERMINED BY:

CONTRAST = [(B1-B2)/B1] x 100

WHERE B1 = LIGHT REFLECTANCE VALUE (LRV) OF THE LIGHTER AREA AND B2 = LIGHT REFLECTANCE VALUE (LRV) OF THE DARKER AREA.

NOTE THAT IN ANY APPLICATION BOTH WHITE AND BLACK ARE NEVER ABSOLUTE; THUS, B1 NEVER EQUALS 100 AND B2 IS ALWAYS GREATER THAN 0.

Curb Ramp Detectable Warnings (YELLOW ONLY)

N.T.S.

RECEIVED
AUG 2 8 2024
TOWN OF LONGBOAT KEY
Planning, Zoning & Building

Shroyer Drapala Engineering, LLC
P.O. Box 9282, Bradenton, FL 34206
1111 3rd Ave. W. Suite 210, Bradenton, FL 34205
Phone: (941) 746-4000
E-Mail: info@ShroyerDrapala.com

Submitted For:

Design By:	Drawn By:	Checked By:
JEC	TMF	JEC
Drawing Scale:		Drawing Date:
1" = 30'		1/20/22

Site Details For Brista Homes

Section 7, Township 36 S, Range 17 E
Town of Longboat Key, Florida

FSP-11

STEVE J. SHROYER LICENSE No. 32052 STATE OF FLORIDA PROFESSIONAL ENGINEER

Steve Shroyer PE No. 32052
I attest to the accuracy and integrity of this document
2024.08.13

F:\PROJECTS\26300 GMD & Buttonwood Dr Property\CADD\Plan Set\11 26300 SITE DETAILS.dwg August 15, 2022 - 5:17pm

11 26300 SITE DETAILS.DWG

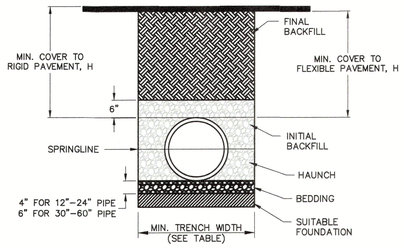

RECOMMENDED MINIMUM TRENCH WIDTHS

PIPE DIA.	MIN. TRENCH WIDTH
4"	21"
6"	23"
8"	26"
10"	28"
12"	30"
15"	34"
18"	39"
24"	48"
30"	56"
36"	64"
42"	72"
48"	80"
54"	88"
60"	96"

NOTES:

1. ALL PIPE SYSTEMS SHALL BE INSTALLED IN ACCORDANCE WITH ASTM D2321, "STANDARD PRACTICE FOR UNDERGROUND INSTALLATION OF THERMOPLASTIC PIPE FOR SEWERS AND OTHER GRAVITY FLOW APPLICATIONS", LATEST ADDITION

2. MEASURES SHOULD BE TAKEN TO PREVENT MIGRATION OF NATIVE FINES INTO BACKFILL MATERIAL, WHEN REQUIRED.

3. FOUNDATION: WHERE THE TRENCH BOTTOM IS UNSTABLE, THE CONTRACTOR SHALL EXCAVATE TO A DEPTH REQUIRED BY THE ENGINEER AND REPLACE WITH SUITABLE MATERIAL AS SPECIFIED BY THE ENGINEER. AS AN ALTERNATIVE AND AT THE DISCRETION OF THE DESIGN ENGINEER, THE TRENCH BOTTOM MAY BE STABILIZED USING A GEOTEXTILE MATERIAL.

4. BEDDING: SUITABLE MATERIAL SHALL BE CLASS I, II OR III. THE CONTRACTOR SHALL PROVIDE DOCUMENTATION FOR MATERIAL SPECIFICATION TO ENGINEER. UNLESS OTHERWISE NOTED BY THE ENGINEER, MINIMUM BEDDING THICKNESS SHALL BE 4" FOR 4"–24"; 6" FOR 30"–60".

5. INITIAL BACKFILL: SUITABLE MATERIAL SHALL BE CLASS I, II OR III IN THE PIPE ZONE EXTENDING NOT LESS THAN 6" ABOVE CROWN OF PIPE. THE CONTRACTOR SHALL PROVIDE DOCUMENTATION FOR MATERIAL SPECIFICATION TO ENGINEER. MATERIAL SHALL BE INSTALLED AS REQUIRED IN ASTM D2321, LATEST EDITION.

6. MINIMUM COVER: MINIMUM COVER, H, IN NON–TRAFFIC APPLICATIONS (GRASS OR LANDSCAPE AREAS) IS 12" FROM THE TOP OF PIPE TO GROUND SURFACE. ADDITIONAL COVER MAY BE REQUIRED TO PREVENT FLOATION. FOR TRAFFIC APPLICATIONS, MINIMUM COVER, H, IS 12" UP TO 48" DIAMETER PIPE AND 24" OF COVER FOR 54"–60" DIAMETER PIPE, MEASURED FROM TOP OF PIPE TO BOTTOM OF FLEXIBLE PAVEMENT OR TO TOP OF RIGID PAVEMENT.

MINIMUM RECOMMENDED COVER BASED ON VECHICLE LOADING CONDITIONS

PIPE DIAM.	SURFACE LIVE LOADING CONDITION: H-25	SURFACE LIVE LOADING CONDITION: HEAVY CONSTRUCTION (75T AXLE LOAD) *
12"–48"	12"	48"
54"–60"	24"	60"

* VEHICLES IN EXCESS OF 75T MAY REQUIRE ADDITIONAL COVER

MINIMUM RECOMMENDED COVER BASED ON RAILWAY LOADING CONDITIONS

PIPE DIAM.	COOPER E-80**
UP TO 24"	24"
30"–36"	36"
42"–60"	48"

** COVER IS MEASURED FROM TOP OF PIPE TO BOTTOM OF RAILWAY TIE.
*** E-80 COVER REQUIREMENTS, ARE ONLY APPLICABLE TO ASTM F 2306 PIPE.

PVC Trench Detail

N.T.S.

UNDERDRAIN

1. CORRUGATED POLYETHYLENE TUBING

   CORRUGATED POLYETHYLENE TUBING WITH A FILTER FABRIC WRAP, UNLESS OTHERWISE NOTED, MAY BE USED FOR UNDERDRAIN APPLICATIONS ASSOCIATED WITH ROADWAY CONSTRUCTION PROVIDING THE FOLLOWING SPECIFICATIONS ARE MET:

   A) THE CORRUGATED POLYETHYLENE TUBING SHALL MEET THE REQUIREMENTS OF ASTM F–405.

   B) THE CORRUGATED POLYETHYLENE TUBING SHALL HAVE A FILTER FABRIC SOCK MEETING F.D.O.T. SPEC. 948–3, LATEST REVISION. IF PERFORATIONS IN PIPE ARE LESS THAN 3/4", THEN FILTER FABRIC SOCK MAY BE OMITTED.

   C) THE ENVELOPE MATERIAL SURROUNDING THE TUBING SHALL BE CRUSHED STONE OR WASHED SHELL. THE THICKNESS OF THE ENVELOPE MATERIAL SHALL BE EQUAL TO OR GREATER THAN THE DIAMETER OF THE TUBING, PLUS 12".

   D) CORRUGATED POLYETHYLENE TUBING SHALL NOT BE ACCEPTABLE UNDER ROADWAYS.

   E) EXTRA CARE SHALL BE TAKEN DURING PLACEMENT TO MAINTAIN PROPER LINE AND GRADE, TO BE PLACED W/ SLOPE OF ROAD.

   F) A CLEAN–OUT SHALL BE CONSTRUCTED AT THE END OF EACH RUN OF UNDER–DRAIN. MAXIMUM SPACING EVERY 100 FEET.

   G) SOD 3' AROUND 18" CONC. SQUARE.

*NOTE: TRANSPORTATION DIRECTOR OR HIS DESIGNEE'S APPROVAL IS REQUIRED FOR THE USE OF FLEXIBLE UNDERDRAIN PIPE.

Underdrain General Notes

N.T.S.

HDPE STORM SEWER PIPE GENERAL NOTES

A. HDPE SHALL MEET CURRENT F.D.O.T. STANDARD SPECIFICATIONS.

B. MINIMUM COVER – 9" (TOP OF PIPE TO BOTTOM OF RIDGED PAVEMENT OF DRIVEWAY)
– 15" (TOP OF PIPE TO BOTTOM OF FLEXIBLE BASE OF DRIVEWAY)

C. SIZES ARE LIMITED TO CURRENT F.D.O.T. STANDARD SPECIFICATIONS.

D. HDPE PIPE IS NOT ALLOWED UNDER ROADWAY.

Storm Sewer Pipe General Notes

N.T.S.

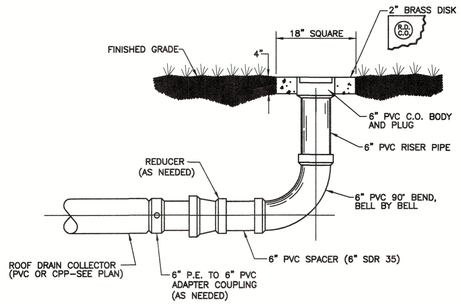

Roof Drain Clean–Out

N.T.S.

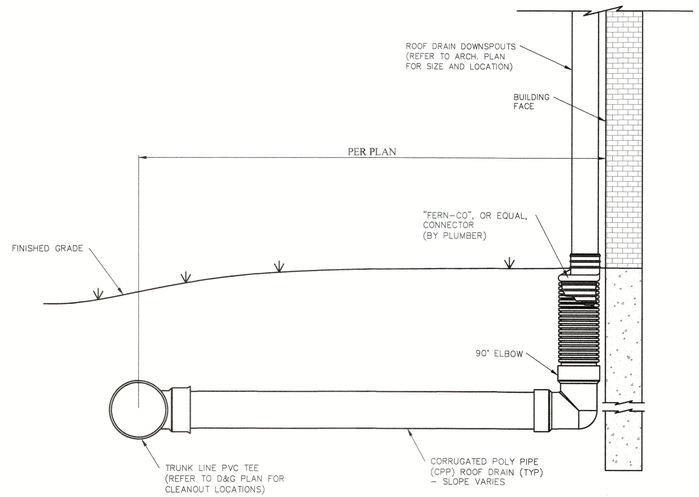

Roof Drain Lateral Detail

N.T.S. SDE

RECEIVED
AUG 2 8 2024
TOWN OF LONGBOAT KEY
Planning, Zoning & Building

Shroyer Drapala Engineering, LLC
P.O. Box 9282, Bradenton, FL 34206
1111 3rd Ave. W. Suite 210, Bradenton, FL 34205
Phone: (941) 746-4000
E-Mail: info@ShroyerDrapala.com

Submitted For:

Design By:	Drawn By:	Checked By:
JEC	TMF	JEC
Drawing Scale: 1" = 30'	Drawing Date: 1/20/22	

Drainage Details For Brista Homes

Section 7, Township 36 S, Range 17 E
Town of Longboat Key, Florida

FSP-12

STEVE J. SHROYER LICENSE No. 32052 STATE OF FLORIDA PROFESSIONAL ENGINEER

Steve Shroyer
PE No. 32052
I attest to the accuracy and integrity of this document
2024.08.13

F:\PROJECTS\26300 GMD & Buttonwood Dr Property\CADD\Plan Set\12 26300 DRAINAGE DETAILS.dwg January 05, 2022 - 1:09pm

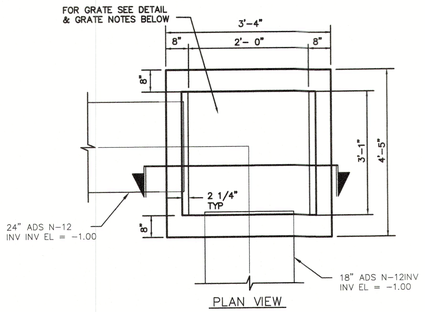

PLAN VIEW

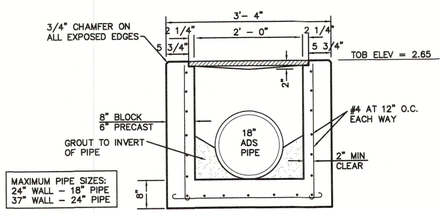

SECTION

NOTES:

1. CONTRACTOR TO SUBMIT SHOP DRAWINGS FOR APPROVAL PRIOR TO CONSTRUCTION. SHOULD ANY VARIANCE OF THIS DETAIL BE NECESSARY.
2. BENCH MARKS WITH THE ELEVATION CLEARLY AND PERMANENTLY MARKED ARE TO BE PLACED ON THE TOP OF ALL OUTFALL CONTROL STRUCTURES.

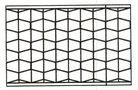

GRATE NOTES:
1. ALL GRATES TO BE GALVANIZED STEEL.
2. TRAFFIC BEARING GRATE TO BE U.S. FOUNDRY NO. 6611.
3. NON-TRAFFIC BEARING GRATE TO BE U.S. FOUNDRY NO. 6606.
4. GRATE TO BE CHAINED TO STRUCTURE PER F.D.O.T. SPECIFICATIONS.

GRATE

Control Structure Detail (CS#1)

N.T.S.

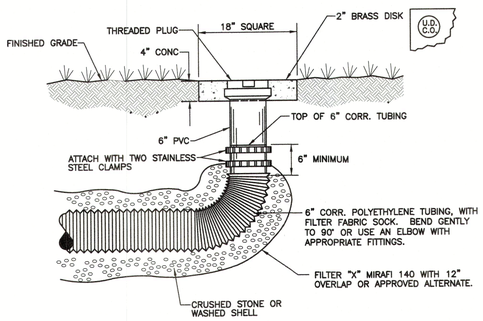

UNDERDRAIN CLEAN-OUT DETAIL
CORRUGATED POLYETHYLENE TUBING

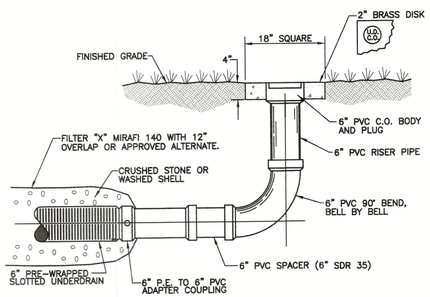

UNDERDRAIN CLEAN-OUT DETAIL - RIGID
* MAXIMUM SPACING EVERY 100 FEET.

Underdrain Clean-Outs (Flexible & Rigid)

N.T.S.

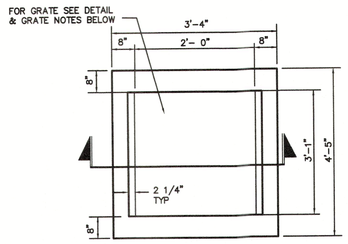

PLAN VIEW

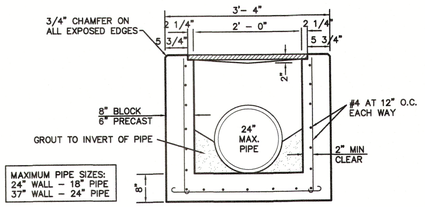

SECTION

NOTES:

1. CONTRACTOR TO SUBMIT SHOP DRAWINGS FOR APPROVAL PRIOR TO CONSTRUCTION. SHOULD ANY VARIANCE OF THIS DETAIL BE NECESSARY.
2. BENCH MARKS WITH THE ELEVATION CLEARLY AND PERMANENTLY MARKED ARE TO BE PLACED ON THE TOP OF ALL OUTFALL CONTROL STRUCTURES.

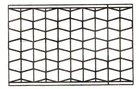

GRATE NOTES:
1. ALL GRATES TO BE GALVANIZED STEEL.
2. TRAFFIC BEARING GRATE TO BE U.S. FOUNDRY NO. 6611.
3. NON-TRAFFIC BEARING GRATE TO BE U.S. FOUNDRY NO. 6606.
4. GRATE TO BE CHAINED TO STRUCTURE PER F.D.O.T. SPECIFICATIONS.

GRATE

Type "C" Inlet Detail

N.T.S.

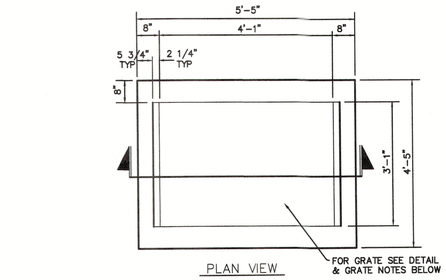

PLAN VIEW

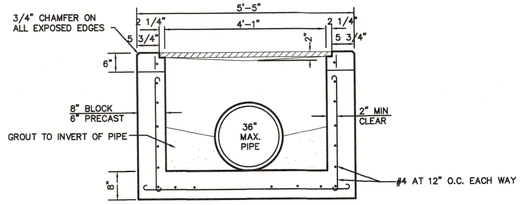

SECTION

MAXIMUM PIPE SIZES:
37" WALL - 24" PIPE
49" WALL - 36" PIPE

NOTES:

1. CONTRACTOR TO SUBMIT SHOP DRAWINGS FOR APPROVAL PRIOR TO CONSTRUCTION. SHOULD ANY VARIANCE OF THIS DETAIL BE NECESSARY.
2. BENCH MARKS WITH THE ELEVATIONS CLEARLY AND PERMANATELY MARKED ARE TO BE PLACED ON THE TOP OF ALL ALL OUTFALL CONTROL STRUCTURES.

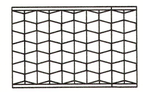

GRATE NOTES:
1. ALL GRATES TO BE GALVANIZED STEEL.
2. TRAFFIC BEARING GRATE TO BE U.S. FOUNDRY NO. 6626.
3. NON-TRAFFIC BEARING GRATE TO BE U.S. FOUNDRY NO. 6607.
4. GRATE TO BE CHAINED TO STRUCTURE PER F.D.O.T. SPECIFICATIONS.

GRATE

Type "D" Inlet Detail

N.T.S.

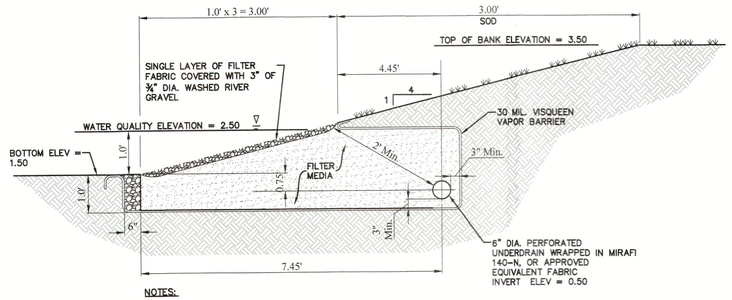

NOTES:

CONTRACTOR TO ENSURE VISQUEEN SEAMS ARE INSTALLED, PER MANUFACTURER'S SPECIFICATIONS, IN ORDER TO MAINTAIN A WATER TIGHT BARRIER

FILTER MEDIA SHALL BE BOLD & GOLD CTS24 MEDIA. CONTACT FURGUSON WATERWORKS - TAMPA (EXCLUSIVE DISTRIBUTOR OF BOLD & GOLD FILTRATION MEDIA)

Side Bank Filter Detail

N.T.S.

Shroyer Drapala Engineering, LLC

P.O. Box 9282
Bradenton, FL 34206

1111 3rd Ave. W.
Suite 210
Bradenton, FL 34205

Phone: (941) 746-4000
E-Mail: info@ShroyerDrapala.com

Submitted For:

Design By:	Drawn By:	Checked By:
JEC	TMF	JEC
Drawing Scale:		Drawing Date:
1" = 30'		1/20/22

Drainage Details
For
Brista Homes

Section 7, Township 36 S, Range 17 E
Town of Longboat Key, Florida

FSP-13

RECEIVED
AUG 28 2024
TOWN OF LONGBOAT KEY
Planning, Zoning & Building

STEVE J. SHROYER LICENSE NO. 32052 STATE OF FLORIDA PROFESSIONAL ENGINEER

Steve Shroyer
PE No. 32052
I attest to the accuracy and integrity of this document
2024.08.13

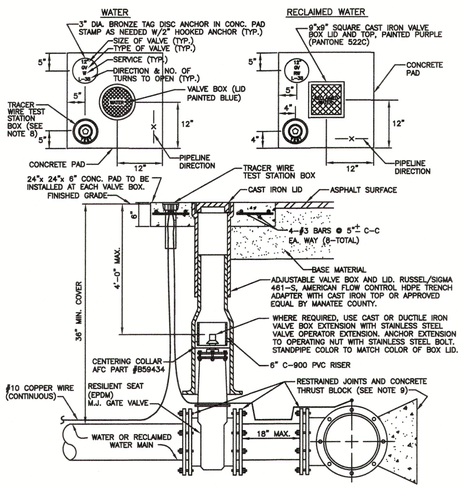

NOTES:

1. "WV" OR "RWV" TO BE IMPRESSED INTO THE NEWLY-POURED CONCRETE CURB, ALONG WITH DISTANCE IN FEET TO THE VALVE. IF NO CURB, INSTALL A BLUE DISC WITH "WV" OR PURPLE DISC WITH "RWV" AND A 1/8"x1" GALVANIZED STEEL SCREW IN THE EDGE OF PAVEMENT WITH THE FOOTAGE FROM THE DISC TO THE VALVE.
2. ALL EXISTING AND PROPOSED VALVE BOXES SHALL BE ADJUSTED TO FINISHED GRADES AS DETERMINED IN THE FIELD.
3. WATER VALVES SHALL NOT BE PLACED IN HANDICAPPED RAMPS.
4. PRECAST CONCRETE PADS & THRUST BLOCKS SHALL NOT BE USED.
5. ALL EXPOSED EDGES OF CONCRETE SHALL BE CHAMFERED 1/2".
6. FOR VALVES 16" AND LARGER, USE BUTTERFLY VALVES.
7. PIPELINE DIRECTION TO BE IMPRESSED INTO NEWLY POURED CONCRETE PAD.
8. TRACER WIRE TEST STATION BOX IS NOT REQUIRED IN VALVE BOX PAD IF THE GATE VALVE IS LOCATED WITHIN 200 FEET OF A WATER SERVICE, BLOW-OFF, BACKFLOW PREVENTER OR FIRE HYDRANT THAT HAS A TRACER WIRE BOX.
9. WHERE THRUST BLOCK NOT USED, RESTRAINED JOINTS MUST THEN EXTEND FROM TEE FULL LENGTH SPECIFIED FOR "TEES."
10. BINGHAM & TAYLOR P3200NFG FOR NORMAL YARD SERVICE. WHERE VALVE WILL BE IN STREET OR PARKING UNDER VEHICLE TRAFFIC, USE P5252RD CENTERED IN SEPARATE CONCRETE PAD SIMILAR TO STANDARD VALVE BOX PAD.

Gate Valve, Box, Lid and Tag

N.T.S.

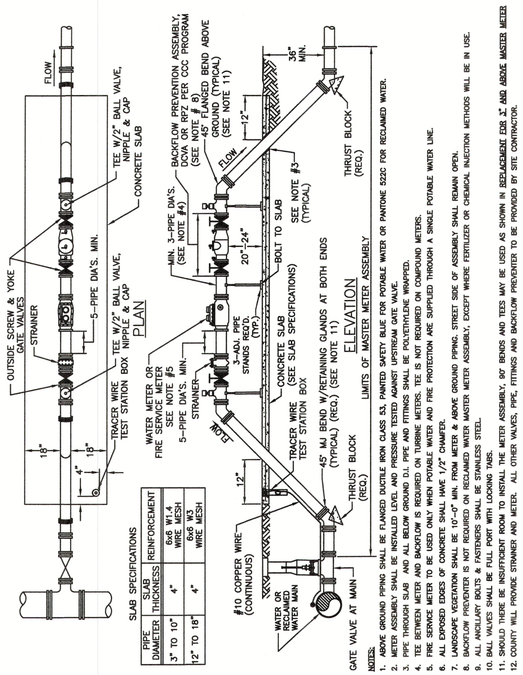

SLAB SPECIFICATIONS		
PIPE DIAMETER	SLAB THICKNESS	REINFORCEMENT
3" TO 10"	4"	6x6 W1.4 WIRE MESH
12" TO 18"	4"	6x6 W3 WIRE MESH

NOTES:

1. ABOVE GROUND PIPING SHALL BE FLANGED DUCTILE IRON CLASS 53, PAINTED SAFETY BLUE FOR POTABLE WATER OR PANTONE 522C FOR RECLAIMED WATER.
2. METER ASSEMBLY SHALL BE INSTALLED LEVEL AND PRESSURE TESTED AGAINST UPSTREAM GATE VALVE.
3. PIPE THROUGH SLAB AND ALL BELOW GROUND D.I. PIPE AND FITTINGS SHALL BE POLYETHYLENE WRAPPED.
4. TEE BETWEEN METER AND BACKFLOW IS REQUIRED ON TURBINE METERS. TEE IS NOT REQUIRED ON COMPOUND METERS.
5. FIRE SERVICE METER TO BE USED ONLY WHERE POTABLE WATER AND FIRE PROTECTION ARE SUPPLIED THROUGH A SINGLE POTABLE WATER LINE.
6. LANDSCAPE VEGETATION SHALL BE 10'-0" MIN. FROM METER & ABOVE GROUND PIPING. STREET SIDE OF ASSEMBLY SHALL REMAIN OPEN.
7. BACKFLOW PREVENTER IS NOT REQUIRED ON RECLAIMED WATER MASTER METER ASSEMBLY, EXCEPT WHERE FERTILIZER OR CHEMICAL INJECTION METHODS WILL BE IN USE.
8. ALL ANCILLARY BOLTS & FASTENERS SHALL BE STAINLESS STEEL.
9. BALL VALVES SHALL BE FULL PORT WITH LOCKING TABS.
10. SHOULD THERE BE INSUFFICIENT ROOM TO INSTALL THE METER ASSEMBLY, 90° BENDS AND TEES MAY BE USED AS SHOWN IN REPLACEMENT FOR 3" AND ABOVE MASTER METER
11. COUNTY WILL PROVIDE STRAINER AND METER. ALL OTHER VALVES, PIPE, FITTINGS AND BACKFLOW PREVENTER TO BE PROVIDED BY SITE CONTRACTOR.

3" And Above Master Meter

N.T.S.

REQUIRED LENGTH OF RESTRAINED JOINT PIPE FOR DR-18 PVC PIPE

MAIN PIPE SIZE	HORIZ. BENDS			TEES				REDUCERS			PLUGS & VALVES
				SIZE - LENGTH				SIZE - LENGTH			
	90°	45°	22.5°								
24	90	38	18	X24 / 189	X20 / 159	X18 / 90	X12 / 54	X18 / 84	X15 / 177	X12 / 156	214
20	78	32	14	X24 / 141	X20 / 101	X18 / 53	X15 / 34	X18 / 85	X15 / 118	X12 / 146	184
18	66	27	13	X24 / 113	X20 / 77	X18 / 41	X15 / 32	X18 / 84	X15 / 101	X12 / 111	151
12	52	22	10	X24 / 84	X20 / 56	X18 / 31	X15 / 31	X18 / 85	X15 / 85	X12 / 85	118
10	44	18	9	X24 / 70	X20 / 46	X18 / 31		X18 / 85	X15 / 85	X12 / 85	100
8	37	15	7	X24 / 56	X20 / 36	X18 / 31		X18 / 85	X15 / 80	X12 / 81	83
6	29	12	6	X24 / 56	X20 / 31			X18 / 85	X15 / 33		63
4	21	8	4	X24 / 56							45

NOTES:

1. RESTRAIN 11.25° BENDS 50% OF LENGTH FOR 22.5° BENDS.
2. ALL VALVES AND FITTINGS SHALL BE RESTRAINED TO THE CONNECTINGSECTIONS OF PIPE.
3. ALL ISOLATIONVALVES MUST BE PROPERLY ANCHORED OR RESTRAINED TO RESIST A 180 PSI TEST PRESSURE IN EITHER DIRECTION.
4. PIPE SIZES ARE GIVEN IN INCHES.
5. RESTRAINED PIPE LENGTHS ARE GIVEN IN FEET.
6. LENGTHS SHOWN ARE FOR A TEST PRESURE OF 180 PSI.
7. THE RESTRAINED LENGTHS SHOWN IN THESE TABLES ARE BASED ON SOIL CLASSIFICATION SP WITH AWWA TYPE 3 TRENCH CONDITIONS, 180 PSI TEST PRESSURE, 3 FEET OF COVER AND 1.5 FACTOR OF SAFETY. ACTUAL BURY CONDITIONS MUST BE DETERMINED BY THE ENGINEER OF RECORD AND THE RESTRAINED LENGTHS MODIFIED ACCORDINGLY.
8. RESTRAINED LENGTHS TO BE APPLIED TO PIPELINES PER DETAIL RESTRAINED LENGTHS FOR PIPE.

Restrained Lengths For PVC Pipe

N.T.S.

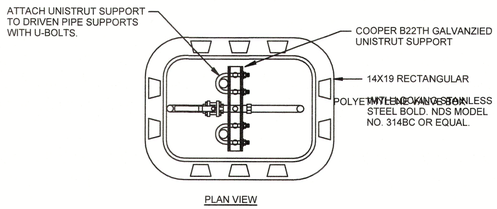

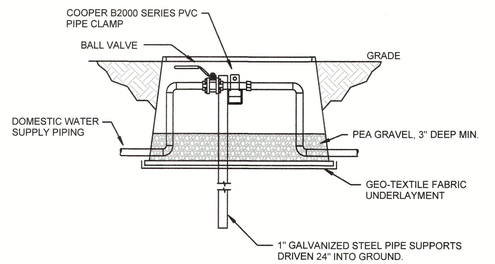

Water Service Shut-Off Valve @ Bldg.

N.T.S.

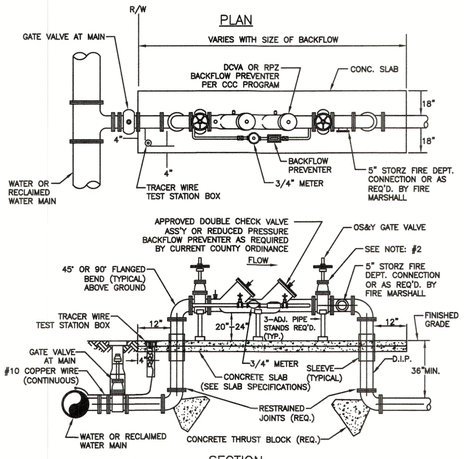

NOTES:

1. THIS DETAIL FOR FIRE PROTECTION ONLY.
2. WHEN PRESSURE TESTING FIRE LINE, TEST AGAINST DOWNSTREAM GATE VALVE.
3. THE SYSTEM MUST MEET ALL REQUIREMENTS OF THE FLORIDA PLUMBING CODE (LATEST EDITION), THE MANATEE COUNTY BACKFLOW PREVENTION ORDINANCE (LATEST EDITION) AND THE MANATEE COUNTY FIRE MARSHALL REQUIREMENTS.
4. ABOVE GROUND PIPING SHALL BE FLANGED DUCTILE IRON CLASS 53 AND PAINTED RED.
5. ALL EXPOSED EDGES OF CONCRETE SHALL HAVE 1/2" CHAMFER.
6. LANDSCAPE VEGETATION SHALL BE 6 FEET MIN. FROM EDGE OF CONCRETE SLAB. STREET SIDE OF ASSEMBLY SHALL REMAIN OPEN.
7. ALL ANCILLARY BOLTS & FASTENERS TO BE STAINLESS STEEL.
8. SEE GATE VALVE, BOX, LID AND TAG DETAIL.
9. PIPE STANDS SHALL BE BOLTED TO SLAB.

SLAB SPECIFICATIONS		
PIPE DIAMETER	SLAB THICKNESS	REINFORCEMENT
3" TO 10"	4"	6x6 W1.4 WIRE MESH
12" TO 18"	4"	6x6 W3 WIRE MESH

3" And AboveFire Line Backflow Preventer

N.T.S.

THRUST BLOCK DIMENSIONS B ft. x d inches														
PIPE SIZE (IN.)	90°BEND		45°BEND		22.5°BEND		11.25°BEND		DEAD END & TEE		45° WYE	
	B	d	B	d	B	d	B	d	B	d	B	d
4	1.5	3 ½	1.1	3 ½	0.8	3 ½	0.6	3 ½	1.3	3 ½	1.1	3 ½
6	2.2	5 ½	1.6	3 ¾	1.2	3 ½	0.8	3 ½	1.9	4 ½	1.6	3 ¾
8	2.9	7	2.1	5	1.5	3 ½	1.1	3 ½	2.4	5 ¾	2.0	4 ¾
10	3.5	8 ½	2.6	6 ¼	1.9	4 ½	1.3	3 ½	3.0	7 ¼	2.5	6
12	4.2	10	3.1	7 ½	2.2	5 ¼	1.6	3 ¾	3.5	8 ¼	3.0	7 ¼
14	4.9	11 ¾	3.6	8 ¾	2.6	6 ¼	1.8	4 ¼	4.1	9 ¾	3.4	8 ¼
16	5.5	13 ¼	4.1	9 ¾	2.9	7	2.1	5	4.7	11 ¼	3.9	9 ¼
18	6.2	15	4.6	11	3.3	8	2.3	5 ½	5.2	12 ½	4.4	10 ½
20	6.9	16 ½	5.0	12	3.6	8 ¾	2.6	6 ¼	5.8	14	4.9	11 ¾
24	8.2	19 ¾	6.0	14 ½	4.3	10 ¼	3.1	7 ½	6.9	16 ½	5.8	14
30	10.1	24 ¼	7.5	18	5.3	12 ¾	3.8	9	8.5	20 ½	7.2	17 ¼
36	12.1	29	8.9	21 ¼	6.4	15 ¼	4.5	10 ¾	10.2	24 ½	8.6	20 ¾

REINFORCEMENT MAT SCHEDULE

FOR DIM. "B" BETWEEN 5.75' & 12.5' USE #4 @ 8" EACH WAY

FOR DIM. "B" LESS THAN 5.75' USE #3 @ 8" EACH WAY

NOTES:

1. ALL THRUST BLOCKS SHALL BE CAST IN PLACE. FITTINGS ADJACENT TO THRUST BLOCKS SHALL BE WRAPPED IN POLYETHYLENE.
2. THIS TABLE IS BASED ON WATER PRESSURE=180 PSI WITH AN ALLOWABLE SOIL BEARING PRESSURE=2000 PSF, CONCRETE STRENGTH f'c =3000 PSI, REINFORCEMENT fy =60.0 KSI. THRUST BLOCK SHALL BE CAST AGAINST FIRM UNDISTURBED SOIL.
3. FOR LARGER "B" DIMENSIONS IT IS NECESSARY TO CHECK THAT PIPE IS SUFFICIENTLY DEEP TO ALLOW 15" MIN. SOIL COVER OVER TOP EDGE OF THRUST BLOCK.
4. RESTRAINED JOINTS MAY BE USED IN LIEU OF THRUST BLOCKS TO SAVE SPACE. THRUST BLOCKS SHALL BE USED IN SITUATIONS WHERE THRUST BLOCKS AND RESTRAINED JOINTS ARE BOTH REQUIRED.

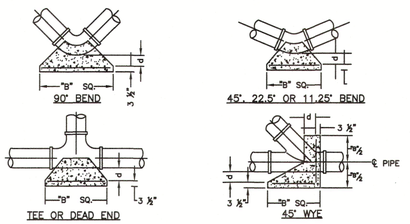

Concrete Thrust Blocks

N.T.S.

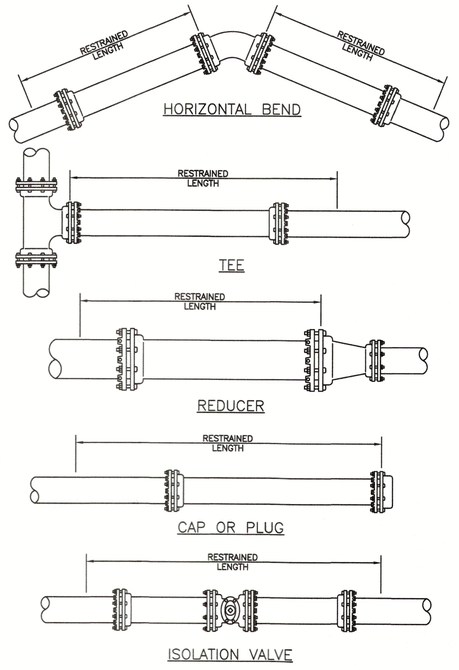

Reastained Lengths For Pipe

N.T.S.

RECEIVED
AUG 28 2024
TOWN OF LONGBOAT KEY
Planning, Zoning & Building

Shroyer Drapala Engineering, LLC

P.O. Box 9282
Bradenton, FL 34206

1111 3rd Ave. W.
Suite 210
Bradenton, FL 34205

Phone: (941) 746-4000
E-Mail: info@ShroyerDrapala.com

Submitted For:

Design By:	Drawn By:	Checked By:
JEC	TMF	JEC
Drawing Scale:		Drawing Date:
1" = 30'		1/20/22

Water Details
For
Brista Homes

Section 7, Township 36 S, Range 17 E
Town of Longboat Key, Florida

FSP-14

STEVE J. SHROYER LICENSE No. 32052 STATE OF FLORIDA PROFESSIONAL ENGINEER

Steve Shroyer
PE No. 32052
I attest to the accuracy and integrity of this document
2024.08.13

F:\PROJECTS\26300 GMD & Buttonwood Dr Property\CADD\Plan Set\26300 WATER DETAILS.dwg January 05, 2022 - 1:05pm

26300 WATER DETAILS.DWG

1. WHERE SANITARY SEWER CROSSES WITHIN 18" VERTICALLY OF A POTABLE WATERMAIN, RECLAIMED WATERMAIN OR STORM DRAIN, THE SEWER MAINS AND/OR WATERMAINS SHALL MAINTAIN A MINIMUM OF 18" VERTICAL CLEARANCE. WHEN A SANITARY SEWER MAIN PARALLELS A RECLAIMED WATERMAIN, A MINIMUM OF 5 FEET HORIZONTAL SEPARATION (CENTER TO CENTER) AND 3 FEET (OUTSIDE TO OUTSIDE) IS REQUIRED.
2. MANHOLES SHALL BE CONSTRUCTED COATED AND INSTALLED ACCORDANCE WITH MANATEE COUNTY SPECIFICATIONS
3. ALL P.V.C. PIPING SHALL BE COLOR CODED (METHOD ESTABLISHED BY M.C.P.W.D. DIRECTIVE) IN THE FOLLOWING COLORS:
4. ALL CLEAN OUT COVERS SHALL BE MARKED "S" FOR SEWER. ALL I.P.S. PLUGS FOR C.O. SHALL BE RAISED NUT SOLID PLUGS.
5. P.V.C. PIPE (GRAVITY SEWER) FITTINGS AND JOINTS SHALL MEET A.S.T.M. STANDARDS, POLYVINYL CHLORIDE (PVC) GRAVITY SEWER PIPE AND FITTINGS, 4" TO 15" INCHES IN DIAMETER, SHALL BE SDR 26, MEETING THE REQUIREMENTS OF ASTM D 3034. JOINING OF PIPE SECTIONS AND FITTINGS SHALL BE BY WATER-TIGHT PUSH-ON JOINTS USING ELASTOMERIC GASKETS IN ACCORDANCE WITH ASTM D 3212 & COLOR CODED (METHOD ESTABLISHED BY M.C.P.W.D. DIRECTIVE) IN THE COLOR GREEN. ALL PIPE MUST BE MARKED WITH APPLICABLE STANDARDS AND SO CERTIFIED.

Sanitary Sewer Notes

N.T.S. Source: SDE

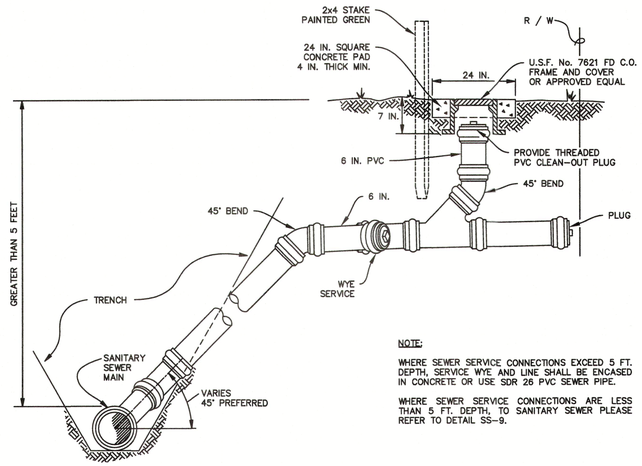

NOTE:

WHERE SEWER SERVICE CONNECTIONS EXCEED 5 FT. DEPTH, SERVICE WYE AND LINE SHALL BE ENCASED IN CONCRETE OR USE SDR 26 PVC SEWER PIPE.

WHERE SEWER SERVICE CONNECTIONS ARE LESS THAN 5 FT. DEPTH, TO SANITARY SEWER PLEASE REFER TO DETAIL SS-9.

Sanitary Sewer Deep Service Line Clean-out Installation

01/02/17

N.T.S. Source: SDE

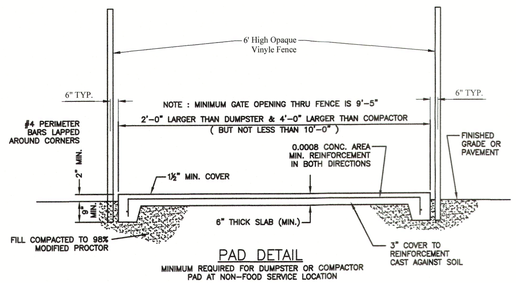

PAD DETAIL

MINIMUM REQUIRED FOR DUMPSTER OR COMPACTOR PAD AT NON-FOOD SERVICE LOCATION

NOTES:

1. DUMPSTER PAD SHALL BE CLASS I CONCRETE W/ MIN. COMP. STRENGTH f'c= 3000 P.S.I. & MIN. REINFORCEMENT STRENGTH fy= 60,000 P.S.I.
2. DUMPSTER PAD SHALL BE FENCED IN ACCORDANCE WITH THE TOWN OF LONGBOAT KEY LAND DEVELOPMENT CODE.

Dumpster Detail

N.T.S.

NOTES:

1. USE OF TYPE A-2 AND A-3 PIPE BEDDING TO BE DETERMINED IN THE FIELD BY THE ENGINEER.
2. PROVIDE ADEQUATE CLEARANCE TO PLACE AND COMPACT STAGE 1 BEDDING MATERIAL IN TRENCH AREA BELOW PIPE SPRINGLINE. PIPE EMBEDMENT MUST BE COMPACTED OUT TO THE TRENCH WALL OR 2.5 TIMES THE PIPE OD, WHICHEVER IS LESS.
3. PIPE INSTALLATION SHALL BE IN ACCORDANCE WITH THE MANUFACTURER'S WRITTEN INSTRUCTIONS.
4. TRACER WIRE NOT REQUIRED FOR GRAVITY SEWERS.

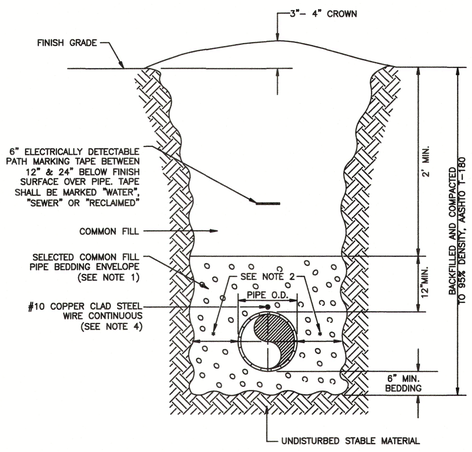

Trench With Unimproved Surface Type A-1 Pipe Bedding

N.T.S. Manatee County UG-11

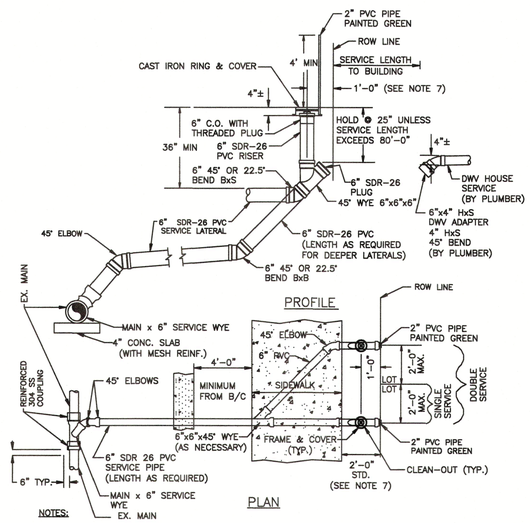

NOTES:

1. RUBBER DONUTS ARE NOT TO BE USED.
2. "SCO" TO BE IMPRESSED INTO THE NEWLY-POURED CONCRETE CURB, ALONG WITH DISTANCE IN FEET TO THE CLEAN-OUT. IF NO CURB INSTALL A GREEN DISC WITH "SCO" AND ¼" X 1" GALVANIZED STEEL SCREW IN THE EDGE OF PAVEMENT WITH THE FOOTAGE FROM THE DISC TO THE CLEAN-OUT.
3. SANITARY SEWER CLEAN-OUTS SHALL NOT BE LOCATED IN DRAINAGE SWALES, EASEMENTS, SIDEWALKS OR DRIVEWAYS.
4. NO SERVICE CONNECTIONS TO BE MADE TO THE CLEAN-OUT RISER. ALL DOMESTIC CONNECTIONS SHALL BE MADE TO THE STUB-OUT PROVIDED.
5. SEWER SERVICE SHALL BE 5' MIN. FROM WATER SERVICE OR FIRE HYDRANT.
6. CLEAN-OUT ADAPTER TO BE SOLVENT-WELDED TO RISER TOP. CLEAN-OUT THREADS SHALL BE WRAPPED WITH TEFLON PLUMBERS TAPE TO SEAL PLUG WATERTIGHT.
7. WHEN THE DISTANCE BETWEEN THE EDGE OF THE SIDEWALK & THE ROW LINE IS ONE FOOT (CUL-DE-SAC W/MEDIAN) THE DISTANCE BETWEEN THE CENTER OF THE CLEAN-OUT RISER & THE ROW LINE SHALL BE 6".

Cut-In Single and Double Service Wyes

N.T.S. Source: Manatee County US-138

RECEIVED
AUG 28 2024
TOWN OF LONGBOAT KEY
Planning, Zoning & Building

Shroyer Drapala Engineering, LLC

P.O. Box 9282
Bradenton, FL 34206

1111 3rd Ave. W.
Suite 210
Bradenton, FL 34205

Phone: (941) 746-4000
E-Mail: info@ShroyerDrapala.com

Submitted For:

Design By:	Drawn By:	Checked By:
JEC	TMF	JEC
Drawing Scale:		Drawing Date:
1" = 30'		1/20/22

Sanitary Details For Brista Homes

Section 7, Township 36 S, Range 17 E
Town of Longboat Key, Florida

FSP-15

STEVE J. SHROYER LICENSE No. 32052 STATE OF FLORIDA PROFESSIONAL ENGINEER

Steve Shroyer PE No. 32052 I attest to the accuracy and integrity of this document 2024.08.13

F:\PROJECTS\26300 GMD & Buttonwood Dr Property\CADD\Plan Set\15 26300 SANITARY DETAILS.dwg April 06, 2022 - 6:04pm

15 26300 SANITARY DETAILS.DWG

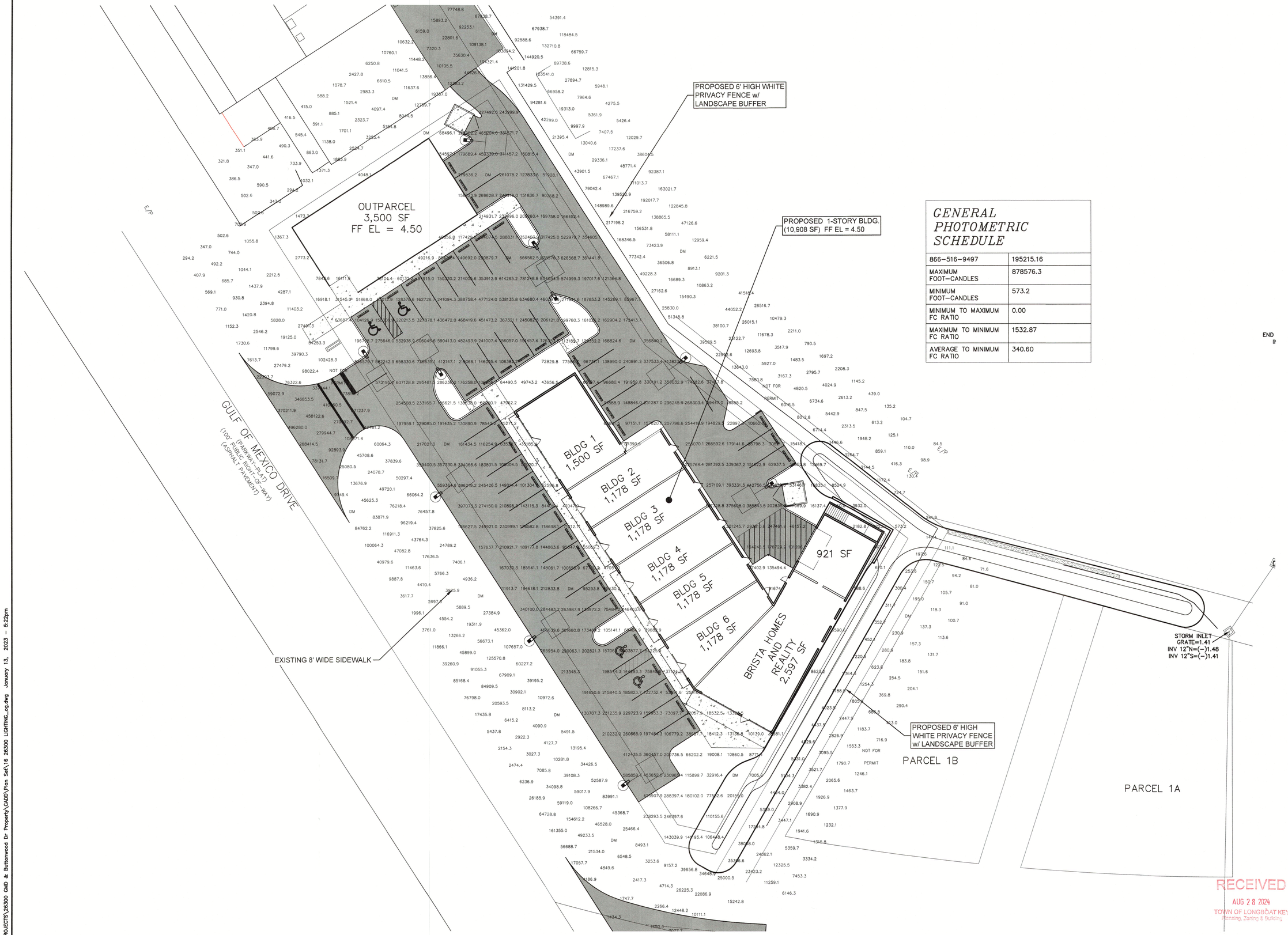

GENERAL PHOTOMETRIC SCHEDULE

866-516-9497	195215.16
MAXIMUM FOOT-CANDLES	878576.3
MINIMUM FOOT-CANDLES	573.2
MINIMUM TO MAXIMUM FC RATIO	0.00
MAXIMUM TO MINIMUM FC RATIO	1532.87
AVERAGE TO MINIMUM FC RATIO	340.60

0 20 40 Feet

N

RECEIVED
AUG 28 2024
TOWN OF LONGBOAT KEY
Planning, Zoning & Building

Shroyer Drapala Engineering, LLC

P.O. Box 9282
Bradenton, FL 34206

1111 3rd Ave. W.
Suite 210
Bradenton, FL 34205

Phone: (941) 746-4000
E-Mail: info@ShroyerDrapala.com

Submitted For:

Design By:	Drawn By:	Checked By:
JEC	JEC	JEC
Drawing Scale:		Drawing Date:
1" = 20'		1/6/23

Site Lighting Photometric Plan

For

Brista Homes

Section 7, Township 36 S, Range 17 E
Town of Longboat Key, Florida

LP-1

STEVE J. SHROYER LICENSE No. 32052 STATE OF FLORIDA PROFESSIONAL ENGINEER

Steve Shroyer
PE No. 32052
I attest to the accuracy and integrity of this document
2024.08.13

F:\PROJECTS\26300 GMD & Buttonwood Dr Property\CADD\Plan Set\16 26300 LIGHTING_og.dwg January 13, 2023 - 5:22pm

16 26300 LIGHTING_OG.DWG

Photometrics Pro

Luminaire Photometric Report

(Evaluation Version)

Filename: MED-85W-T3-AMB-STL
Manufacturer: SYNERGY LIGHTING INC
Luminaire: MED SERIES
Luminaire Cat: MED-85W-T3-AMB-STL
Lamp: X-70-CRI DATA SHOWN IS SCALED FROM 11645718.05
Lamp Output: Total luminaire Lumens: 8621.6
Max Candela: 10,824.4 at Horizontal: 300°, Vertical: 72.5°
Input Wattage: 85.2822
Luminous Opening: Circular (Dia: 21")
Test Lab: IT SHENZEN LTD OPTRONICS
Photometry : Type C
Nema Type: 7 X 5

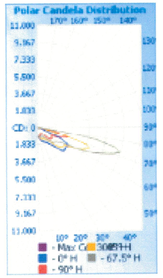

Roadway Summary

Cutoff Classification:	NONCUTOFF
Distribution:	TYPE III, MEDIUM
Max Cd, 90 Deg Vert:	0
Max Cd, 80 to <90 Deg:	2,743.4

Lumens	% Lamp	
Downward Street Side:	7,591.9	88.1%
Downward House Side:	1,029.4	11.9%
Downward Total:	8,621.3	100%
Upward Street Side:	0	0%
Upward House Side:	0	0%
Upward Total:	0	0%
Total Lumens:	8,621.3	100%

Flood Summary

	Efficiency	Lumens	Horizontal Spread	Vertical Spread
Field (10%):	87.3%	7,524.2	146.6	82.4
Beam (50%):	25.4%	2,192.0	32.6	34.7
Total:	100%	8,617.9		

Zonal Lumen Summary

Zone	Lumens	% Luminaire
0-30	770.4	8.9%
0-40	1,501.4	17.4%
0-60	4,515.2	52.4%
60-90	4,106.4	47.6%
70-100	1,738.6	20.2%
90-120	0	0%
0-90	8,621.6	100%
90-180	0	0%
0-180	8,621.6	100%

Lumens Per Zone

Zone	Lumens	% Total	Zone	Lumens	% Total
0-10	94.4	1.1%	90-100	0	0%
10-20	255.6	3.0%	100-110	0	0%
20-30	420.4	4.9%	110-120	0	0%
30-40	731.0	8.5%	120-130	0	0%
40-50	1,292.7	15.0%	130-140	0	0%
50-60	1,721.2	20.0%	140-150	0	0%
60-70	2,367.8	27.5%	150-160	0	0%
70-80	1,651.9	19.2%	160-170	0	0%
80-90	86.7	1.0%	170-180	0	0%

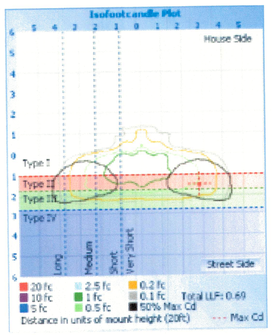

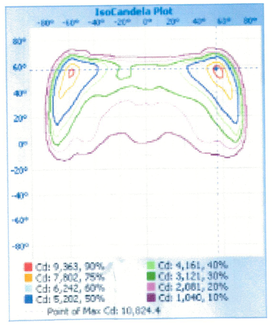

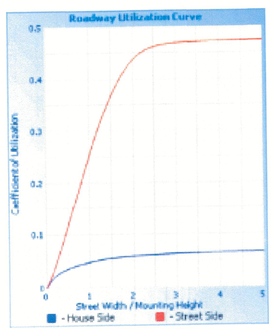

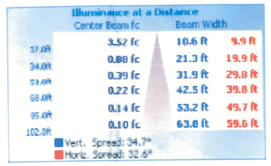

Coefficients Of Utilization - Zonal Cavity Method

Effective Floor Cavity Reflectance: 20%

RCC %:	80			70			50			30			10		0
RW %:	70	50	30	70	50	30	50	30	10	30	30	10	50	30	0
RCR: 0	1.19	1.19	1.19	1.16	1.16	1.16	1.00	1.11	1.11	1.11	1.06	1.06	1.06	1.02	1.02	1.02	1.00
1	1.05	.99	.93	.88	1.02	.96	.91	.77	.92	.87	.83	.88	.84	.81	.84	.81	.78	.76
2	.92	.81	.71	.64	.89	.79	.70	.58	.75	.68	.61	.71	.65	.60	.68	.63	.58	.56
3	.81	.67	.56	.48	.78	.65	.55	.44	.62	.53	.46	.59	.52	.45	.56	.50	.44	.42
4	.72	.57	.45	.37	.69	.55	.45	.34	.52	.43	.36	.50	.42	.35	.47	.40	.35	.32
5	.65	.49	.38	.29	.62	.48	.37	.28	.45	.36	.29	.43	.35	.28	.41	.34	.28	.25
6	.59	.43	.32	.24	.57	.42	.31	.23	.40	.30	.24	.38	.29	.23	.36	.29	.23	.20
7	.54	.38	.27	.20	.52	.37	.27	.19	.35	.26	.20	.34	.25	.19	.32	.25	.19	.17
8	.50	.34	.24	.17	.48	.33	.24	.16	.32	.23	.17	.30	.22	.17	.29	.22	.16	.14
9	.46	.31	.21	.15	.45	.30	.21	.14	.29	.20	.14	.27	.20	.14	.26	.19	.14	.12
10	.43	.28	.19	.13	.42	.27	.19	.12	.26	.18	.13	.25	.18	.13	.24	.17	.12	.10

Luminaire Report Summary

```
ISSNAME:LM-63-2002
[TEST]
[TESTLAB] IT SHENZEN LTD OPTRONICS
[ISSUEDATE] 9/15/2018
[MANUFACT] SYNERGY LIGHTING INC
[LUMCAT] MED-85W-T3-AMB-STL
[LUMINAIRE] MED SERIES
[LAMP] X-70-CRI
[_SEARCH_SOURCETYPE] LED
[_SEARCH_COLORTEMP] AMBER
[_SEARCH_APPLICATION] Outdoor
[_SEARCH_MOUNTING] ARM
[_SEARCH_CRI] 40
[MORE] DATA SHOWN IS SCALED FROM 11645718.05
[_SEARCH_CERTIFICATION] CSA

FILE: CREATED USING ABSOLUTE PHOTOMETRY
FILE: CANDELA MULTIPLIER: 0.92
FILE: VERTICAL ANGLES: Y3, HORIZONTAL ANGLES: Y7
FILE: COORDINATE SYSTEMS: TYPE C
FILE: UNIT OF MEASURE: STANDARD
FILE: BALLAST FACTOR: 0.3
```

Photometrics Pro 13.29 - (Evaluation Version) copyright 2003-2023 by jSolutions, Inc.
Reported data calculated from manufacturer's data file, based on IES recommended methods.

Candela Table - Type C

	0	5	15	25	35	45	55	60	62.5	65	67.5	70	72.5	75	77.5	80	82.5	85	87.5	90	92.5	95	97.5	100	102.5	105	107.5	110	112.5	115	117.5	120	125	135	145	155	165
0	1018	1018	1018	1018	1018	1018	1018	1018	1018	1018	1018	1018	1018	1018	1018	1018	1018	1018	1018	1018	1018	1018	1018	1018	1018	1018	1018	1018	1018	1018	1018	1018	1018	1018	1018	1018	1018
2.5	1113	1112	1105	1096	1087	1082	1069	1063	1060	1056	1053	1050	1047	1042	1038	1035	1032	1030	1027	1024	1020	1015	1010	1005	1001	998	995	991	987	982	979	975	969	959	945	935	931
5	1196	1199	1193	1176	1159	1150	1128	1116	1109	1102	1095	1088	1080	1071	1062	1054	1046	1040	1033	1028	1026	1002	988	973	961	950	938	929	918	907	894	881	872	848	805	754	704	669
7.5	1303	1306	1301	1280	1253	1224	1175	1153	1143	1133	1124	1114	1103	1090	1076	1063	1051	1039	1028	1016	1002	988	973	961	950	938	929	918	907	894	881	872	848	805	754	704	669
10	1407	1409	1406	1384	1346	1295	1217	1178	1160	1142	1126	1110	1095	1079	1064	1047	1030	1015	997	980	961	944	927	912	900	884	873	860	848	833	818	805	778	729	670	603	561
12.5	1497	1498	1496	1474	1425	1347	1234	1177	1150	1123	1099	1076	1054	1034	1014	995	971	953	932	914	892	871	849	828	813	792	777	762	748	734	723	713	693	648	586	512	466
15	1568	1571	1572	1550	1484	1372	1221	1147	1113	1079	1048	1020	990	956	943	919	891	867	841	818	790	762	740	720	702	682	663	648	637	624	614	603	582	548	487	435	404
17.5	1630	1633	1643	1616	1519	1369	1201	1119	1081	1045	1012	979	947	918	889	862	832	805	776	746	717	692	661	632	608	582	560	542	526	511	496	486	467	433	422	397	369
20	1680	1685	1714	1670	1527	1365	1199	1122	1088	1054	1020	988	956	923	887	852	817	783	748	713	678	645	610	577	549	519	494	473	454	434	415	398	363	356	376	363	333
22.5	1727	1734	1789	1769	1532	1378	1240	1177	1144	1109	1072	1034	995	955	911	866	823	781	736	692	649	606	565	527	495	465	441	417	396	376	356	334	308	304	330	334	317
25	1796	1806	1889	1741	1554	1425	1332	1276	1241	1202	1158	1111	1062	1013	959	903	849	798	744	690	635	583	534	490	456	427	403	380	356	330	306	291	283	271	293	310	302
27.5	1888	1912	1998	1789	1597	1498	1448	1393	1352	1307	1253	1198	1141	1084	1026	955	893	832	769	705	641	581	526	478	442	411	384	357	325	293	277	272	268	253	264	293	296
30	1998	2037	2069	1845	1647	1559	1527	1474	1433	1388	1332	1275	1217	1158	1092	1023	955	887	817	744	672	602	540	487	445	410	378	343	300	275	267	263	258	240	244	279	285
32.5	2145	2211	2140	1923	1717	1620	1597	1547	1511	1472	1429	1382	1333	1277	1217	1149	1080	1001	920	830	738	654	581	521	473	431	393	344	298	281	274	269	259	234	231	265	272
35	2326	2411	2226	2027	1846	1745	1725	1695	1666	1640	1613	1582	1547	1504	1452	1381	1306	1207	1097	970	841	722	638	567	511	466	422	361	319	306	301	301	279	237	227	258	265
37.5	2549	2621	2326	2159	2056	1972	1914	1900	1877	1862	1846	1825	1805	1780	1739	1670	1592	1470	1326	1157	976	821	709	624	556	506	455	391	356	341	340	351	311	246	232	252	261
40	2785	2839	2487	2386	2341	2247	2182	2149	2103	2092	2082	2077	2085	2086	2063	2017	1933	1792	1615	1410	1175	971	813	698	609	553	494	433	402	387	390	404	347	259	244	250	268
42.5	3157	3163	2678	2693	2676	2590	2450	2323	2263	2241	2242	2269	2311	2344	2353	2333	2258	2113	1921	1686	1426	1168	952	789	665	588	519	465	438	425	433	436	370	273	267	254	287
45	3611	3584	3058	2967	3041	2930	2627	2415	2348	2327	2340	2384	2439	2482	2499	2482	2420	2285	2105	1849	1561	1268	1014	819	673	585	517	473	447	435	435	423	363	278	288	272	312
47.5	3761	3726	3297	3279	3288	3198	2758	2524	2450	2416	2416	2449	2498	2536	2550	2533	2476	2362	2174	1901	1576	1264	995	787	654	573	509	470	443	426	417	402	350	274	293	274	327
50	3733	3642	3324	3376	3397	3344	2885	2648	2558	2514	2502	2521	2560	2586	2591	2566	2500	2385	2197	1910	1571	1249	967	765	629	552	497	458	428	406	398	391	347	277	283	299	339
52.5	3674	3516	3329	3134	3422	3389	3085	2834	2734	2691	2664	2660	2670	2660	2621	2552	2444	2298	2080	1777	1443	1135	886	712	590	497	451	429	395	375	368	368	350	288	271	309	317
55	3737	3542	3089	2936	3491	3480	3329	3141	3041	2984	2931	2882	2842	2776	2683	2563	2418	2226	1975	1668	1343	1058	835	647	531	420	383	362	347	337	343	355	367	307	281	335	277
57.5	3826	3690	3078	2960	3547	3890	3837	3711	3601	3511	3433	3352	3257	3107	2917	2703	2501	2356	2185	1988	1363	1074	816	571	412	327	302	289	283	298	327	358	408	356	342	274	248
60	3572	3667	3147	3068	3861	4560	4607	4510	4392	4326	4318	4212	4109	3906	3631	3316	3052	2739	2384	2011	1596	1229	848	542	385	321	293	265	273	303	342	386	460	350	340	248	228
62.5	2662	2814	2783	3238	4150	5179	5475	5506	5492	5561	5558	5339	5121	4861	4481	4061	3697	3284	2844	2370	1851	1365	811	533	386	336	278	254	275	310	350	396	448	277	340	234	221
65	1624	1762	2096	2862	4346	5568	6245	6435	6574	6694	6527	6187	5897	5605	5156	4659	4189	3674	3166	2593	1980	1300	665	471	325	264	231	232	255	289	326	348	325	238	289	226	228
67.5	808	912	1194	1982	3984	5921	6678	7163	7563	7664	7399	6993	6687	6406	5891	5309	4712	4106	3515	2841	2039	1041	540	408	270	201	194	206	225	242	254	256	258	231	275	232	228
70	425	412	476	673	2300	5405	7529	8180	8581	8602	8384	8008	7778	7608	7069	6416	5716	5039	4321	3332	1914	710	428	343	264	161	164	172	181	193	205	212	231	249	264	254	224
72.5	286	266	312	395	771	3047	7201	9569	9938	9626	9116	8678	8480	8346	7710	6878	6021	5190	4371	3059	1234	422	294	236	143	132	135	148	166	181	193	198	212	260	266	292	222
75	333	219	250	328	419	1001	5131	8572	9267	9154	8480	7743	7356	7230	6621	5909	5130	4405	3544	2122	595	242	180	134	106	110	122	142	157	167	177	185	191	258	276	312	235
77.5	368	175	213	281	329	601	2834	5830	6442	6397	6288	5831	5438	5367	4878	4315	3644	2977	2106	1023	246	126	101	80	72	89	106	124	134	142	154	158	160	259	298	297	241
80	121	107	131	203	214	252	918	2356	2740	2743	2743	2736	2648	2643	2301	1921	1471	1005	597	255	96	59	52	48	48	57	72	89	99	103	111	118	119	217	324	205	202
82.5	41	32	48	72	82	86	236	410	497	419	402	424	395	342	236	170	112	71	49	31	23	18	18	17	17	20	27	35	41	44	46	48	54	124	191	77	82
85	5	4	3	3	3	4	5	6	6	6	6	6	6	6	6	6	6	5	5	5	5	5	5	5	5	5	5	5	5	5	5	5	5	4	3	2	1	
87.5	4	3	2	2	3	4	5	5	6	6	6	6	6	6	5	5	5	5	5	5	5	4	4	4	5	5	5	5	5	5	5	5	5	4	3	1	1	
90	0	0	0	0	0	0	0	0	0	0	0	0	0	0	0	0	0	0	0	0	0	0	0	0	0	0	0	0	0	0	0	0	0	0	0	0	0	
92.5	0	0	0	0	0	0	0	0	0	0	0	0	0	0	0	0	0	0	0	0	0	0	0	0	0	0	0	0	0	0	0	0	0	0	0	0	0	
95	0	0	0	0	0	0	0	0	0	0	0	0	0	0	0	0	0	0	0	0	0	0	0	0	0	0	0	0	0	0	0	0	0	0	0	0	0	
97.5	0	0	0	0	0	0	0	0	0	0	0	0	0	0	0	0	0	0	0	0	0	0	0	0	0	0	0	0	0	0	0	0	0	0	0	0	0	
100	0	0	0	0	0	0	0	0	0	0	0	0	0	0	0	0	0	0	0	0	0	0	0	0	0	0	0	0	0	0	0	0	0	0	0	0	0	
102.5	0	0	0	0	0	0	0	0	0	0	0	0	0	0	0	0	0	0	0	0	0	0	0	0	0	0	0	0	0	0	0	0	0	0	0	0	0	
105	0	0	0	0	0	0	0	0	0	0	0	0	0	0	0	0	0	0	0	0	0	0	0	0	0	0	0	0	0	0	0	0	0	0	0	0	0	
107.5	0	0	0	0	0	0	0	0	0	0	0	0	0	0	0	0	0	0	0	0	0	0	0	0	0	0	0	0	0	0	0	0	0	0	0	0	0	
110	0	0	0	0	0	0	0	0	0	0	0	0	0	0	0	0	0	0	0	0	0	0	0	0	0	0	0	0	0	0	0	0	0	0	0	0	0	
112.5	0	0	0	0	0	0	0	0	0	0	0	0	0	0	0	0	0	0	0	0	0	0	0	0	0	0	0	0	0	0	0	0	0	0	0	0	0	
115	0	0	0	0	0	0	0	0	0	0	0	0	0	0	0	0	0	0	0	0	0	0	0	0	0	0	0	0	0	0	0	0	0	0	0	0	0	
117.5	0	0	0	0	0	0	0	0	0	0	0	0	0	0	0	0	0	0	0	0	0	0	0	0	0	0	0	0	0	0	0	0	0	0	0	0	0	
120	0	0	0	0	0	0	0	0	0	0	0	0	0	0	0	0	0	0	0	0	0	0	0	0	0	0	0	0	0	0	0	0	0	0	0	0	0	
122.5	0	0	0	0	0	0	0	0	0	0	0	0	0	0	0	0	0	0	0	0	0	0	0	0	0	0	0	0	0	0	0	0	0	0	0	0	0	
125	0	0	0	0	0	0	0	0	0	0	0	0	0	0	0	0	0	0	0	0	0	0	0	0	0	0	0	0	0	0	0	0	0	0	0	0	0	
127.5	0	0	0	0	0	0	0	0	0	0	0	0	0	0	0	0	0	0	0	0	0	0	0	0	0	0	0	0	0	0	0	0	0	0	0	0	0	
130	0	0	0	0	0	0	0	0	0	0	0	0	0	0	0	0	0	0	0	0	0	0	0	0	0	0	0	0	0	0	0	0	0	0	0	0	0	
132.5	0	0	0	0	0	0	0	0	0	0	0	0	0	0	0	0	0	0	0	0	0	0	0	0	0	0	0	0	0	0	0	0	0	0	0	0	0	
135	0	0	0	0	0	0	0	0	0	0	0	0	0	0	0	0	0	0	0	0	0	0	0	0	0	0	0	0	0	0	0	0	0	0	0	0	0	
137.5	0	0	0	0	0	0	0	0	0	0	0	0	0	0	0	0	0	0	0	0	0	0	0	0	0	0	0	0	0	0	0	0	0	0	0	0	0	
140	0	0	0	0	0	0	0	0	0	0	0	0	0	0	0	0	0	0	0	0	0	0	0	0	0	0	0	0	0	0	0	0	0	0	0	0	0	
142.5	0	0	0	0	0	0	0	0	0	0	0	0	0	0	0	0	0	0	0	0	0	0	0	0	0	0	0	0	0	0	0	0	0	0	0	0	0	
145	0	0	0	0	0	0	0	0	0	0	0	0	0	0	0	0	0	0	0	0	0	0	0	0	0	0	0	0	0	0	0	0	0	0	0	0	0	
147.5	0	0	0	0	0	0	0	0	0	0	0	0	0	0	0	0	0	0	0	0	0	0	0	0	0	0	0	0	0	0	0	0	0	0	0	0	0	
150	0	0	0	0	0	0	0	0	0	0	0	0	0	0	0	0	0	0	0	0	0	0	0	0	0	0	0	0	0	0	0	0	0	0	0	0	0	
152.5	0	0	0	0	0	0	0	0	0	0	0	0	0	0	0	0	0	0	0	0	0	0	0	0	0	0	0	0	0	0	0	0	0	0	0	0	0	
155	0	0	0	0	0	0	0	0	0	0	0	0	0	0	0	0	0	0	0	0	0	0	0	0	0	0	0	0	0	0	0	0	0	0	0	0	0	
157.5	0	0	0	0	0	0	0	0	0	0	0	0	0	0	0	0	0	0	0	0	0	0	0	0	0	0	0	0	0	0	0	0	0	0	0	0	0	
160	0	0	0	0	0	0	0	0	0	0	0	0	0	0	0	0	0	0	0	0	0	0	0	0	0	0	0	0	0	0	0	0	0	0	0	0	0	
162.5	0	0	0	0	0	0	0	0	0	0	0	0	0	0	0	0	0	0	0	0	0	0	0	0	0	0	0	0	0	0	0	0	0	0	0	0	0	
165	0	0	0	0	0	0	0	0	0	0	0	0	0	0	0	0	0	0	0	0	0	0	0	0	0	0	0	0	0	0	0	0	0	0	0	0	0	
167.5	0	0	0	0	0	0	0	0	0	0	0	0	0	0	0	0	0	0	0	0	0	0	0	0	0	0	0	0	0	0	0	0	0	0	0	0	0	
170	0	0	0	0	0	0	0	0	0	0	0	0	0	0	0	0	0	0	0	0	0	0	0	0	0	0	0	0	0	0	0	0	0	0	0	0	0	
172.5	0	0	0	0	0	0	0	0	0	0	0	0	0	0	0	0	0	0	0	0	0	0	0	0	0	0	0	0	0	0	0	0	0	0	0	0	0	
175	0	0	0	0	0	0	0	0	0	0	0	0	0	0	0	0	0	0	0	0	0	0	0	0	0	0	0	0	0	0	0	0	0	0	0	0	0	
177.5	0	0	0	0	0	0	0	0	0	0	0	0	0	0	0	0	0	0	0	0	0	0	0	0	0	0	0	0	0	0	0	0	0	0	0	0	0	
180	0	0	0	0	0	0	0	0	0	0	0	0	0