MAJHER RESIDENCE

7017 LONGBOAT DRIVE NORTH
LONGBOAT KEY, FLORIDA 34228

NPDES

MECHANICAL, ELECTRICAL, AND PLUMBING REVIEWS WILL BE DEFERRED TO FIELD INSPECTORS

BLDG PERMIT PLANS
FILE
Copy of Record

PROJECT DESCRIPTION

NEW CONSTRUCTION OF 2,857 SF SINGLE-FAMILY RESIDENCE ON A VACANT LOT. THE PROPOSED RESIDENCE IS LOCATED WITHIN FLOOD ZONE AE (EL: 8.00') AND ELEVATED TO MEET THE FLOOD REQUIREMENTS. ALL POOL AND SPA ITEMS NOTED WITHIN THE DRAWINGS ARE TO BE SUBMITTED UNDER A SEPARATE PERMIT AND SHALL BE LISTED WITHIN THESE DRAWINGS FOR REFERENCE ONLY.

GRAPHIC SYMBOLS

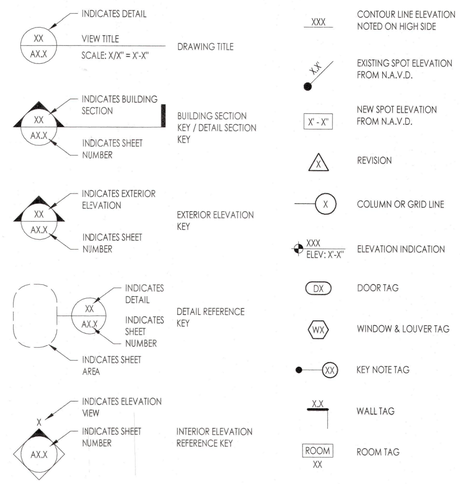

ABBREVIATIONS

(NOT ALL APPEAR ON DRAWINGS)

&_____ And
AL. _____ Aluminum
A.F.F. _____ Above Finished Floor
ASCE _____ American Society of Civil Engineering
A.R. _____ As Required
ASTM _____ American Society for Testing and Materials
B.F.E. _____ Base Flood Elevation
BLD _____ Building
B/O _____ Bottom of
CAB _____ Cabinet
C.I.P _____ Cast In Place
CJ _____ Control Joints
CL _____ Centerline
CLOS. _____ Closet
CMU _____ Concrete Masonry Unit
CONC. _____ Concrete
CONT. _____ Continuous
C.O. _____ Clean Out
C.T. _____ CounterTop
DBL _____ Double
DEMO. _____ Demolish (tion)
DIAG. _____ Diagonal
DIA. _____ Diameter
DN. _____ Down
DWG _____ Drawing
DWGS _____ Drawings
DS _____ Down Spout
ECF _____ Exposed Concrete Finish
ELEC. _____ Electrical)
ELEV. - EL. _____ Elevation
E.O.S. _____ Edge of Slab
EQ. _____ Equal
EQUIP. _____ Equipment
F.D. _____ Floor Drain
FEMA _____ FederalEmergency Management Agency
FLD VT _____ Flood Vent
F.O. _____ Face O'
FS _____ Fire Sprinkler
FT _____ Feet
F.F.L. _____ Finish Floor Level
GA. _____ Gauge
GALV. _____ Galvanized
G.C. _____ General Contractor
GR _____ Guardrail
GYPBD. _____ Gypsum Board
HORIZ. _____ Horizontal
HB _____ Hose Bib
HR _____ Handrail
HT _____ Height
INT. _____ Interior
LA. _____ Landscape Architect
LAV. _____ Lavatory
MAX. _____ Maximum
MIL _____ 1/1000 Inch
MIR _____ Mirror
MPH _____ Miles Per Hour
MSL _____ Mean Sea Level
MTL _____ Metal
MFGR _____ Manufacturer
MIN. _____ Minimum
MNF _____ Manufacturer's Finish
M.O. _____ Masonry Opening
MPH _____ Miles Per Hour
MSL _____ Mean Sea Level
N/A _____ Not Applicable
N.G.V.D. _____ National Geodetic Vertical Datum
N.I.C. _____ Not in Contract
N.S. & F.S. _____ Near Side and Far Side
N.T.S. _____ Not to Scale
O.C. _____ On Center
ORD _____ Overflow Roof Drain
OSB _____ Oriented Strand Board
OVF.D. _____ Overflow Drain
OVS _____ Overflow Scupper
PLWD. _____ Plywood
POLYISO _____ Polyisocyanurate
PSI _____ Pounds per Square Inch
PT - P. T. _____ Preservative Treated (Wood)
P.T.V. _____ Projection Television
PVC _____ Polyvinyl Chloride
REINFOR. _____ Reinforcement
R.C. _____ Reinforced Concrete
REQ'D _____ Required
RD _____ Roof Drain
R.O. _____ Rough Opening
R.S. _____ Roof Scupper
RWP _____ Rain Water Pipe
RWS _____ Rain Water Scupper
SIM _____ Similar
Specs _____ Specifications
Sq. Ft. _____ Square Feet
S.F.L. _____ Structural Floor Level
SS _____ Stainless Steel
STR. _____ Structural
SVP _____ Soil Vent Pipe
TBD _____ To Be Determined
T.&B. _____ Top & Bottom
T.C.A. _____ Tile Council of America, Inc.
T/O _____ Top Of
TOS _____ Top Of Slab
TS _____ Tubular Steel
TYP. _____ Typical
U.N.O. _____ Unless Noted Otherwise
VERT. _____ Vertical
V.I.F. _____ Verify in Field
V.T.R. _____ Vent Through Roof
W/ _____ With
WC _____ Water Closet
WH _____ Water Heater
W/D _____ Washer / Dryer (Stackable)
W/O _____ Without
W.P. _____ Working Point
WT. _____ Weight
W.W.F. _____ Welded Wire Fabric
W.W.M. _____ Welded Wire Mesh
W.W.R. _____ Welded Wire Reinforcement

INDEX OF DRAWINGS

NPDES BLDG PERMIT PLANS FILE Copy of Record

PERMIT SET

NPDES

GENERAL
A0.0 COVER SHEET
ASX EXISTING SURVEY
AS1.0 PROPOSED SITE PLAN

LANDSCAPE
L-1.0 DRAINAGE PLAN
L-2.0 HARDSCAPE PLAN
L-3.0 PLANTING PLAN

ARCHITECTURAL
A0.1 SPECIFICATIONS
A0.2 SPECIFICATIONS
A0.3 SPECIFICATIONS
A0.4 SPECIFICATIONS
A1.0 FLOOR PLANS
A1.1 FLOOR PLANS
A1.2 ROOFTOP DECK
A1.3 ENLARGED PLAN & DETAILS
A1.4 ENLARGED PLAN & DETAILS
A2.0 EXTERIOR ELEVATIONS
A2.1 EXTERIOR ELEVATIONS
A2.2 BUILDING SECTIONS
A3.0 DOOR & WINDOW SCHEDULE
A3.1 DOOR & WINDOW DETAILS
A3.2 DOOR & WINDOW DETAILS
A3.3 DOOR & WINDOW DETAILS
A4.0 REFLECTIVE CEILING PLANS
A4.1 REFLECTIVE CEILING PLANS
A7.0 WALL SECTIONS
A7.1 WALL SECTIONS
A8.0 GENERAL DETAILS
A8.1 GROUND & ROOF PLAN, GUARDRAILS

STRUCTURAL
S.1 SPECIFICATIONS
S.2 FOUNDATION PLAN
S.3 2ND FLOOR FRAMING PLAN
S.4 3RD FLOOR FRAMING PLAN
S.5 ROOF FRAMING PLAN
S.6 BUILDING SECTION & DETAILS
S.7 BUILDING SECTION & DETAILS

MECHANICAL
M1 MECHANICAL LAYOUT
M2 MECHANICAL SCHEDULE

ELECTRICAL
E1.0 LIGHTING & POWER PLANS
E1.1 LIGHTING & POWER PLANS
E1.2 LIGHTING & POWER PLANS
E1.3 LIGHTING FIXTURE SCHEDULE

LOCATION MAP

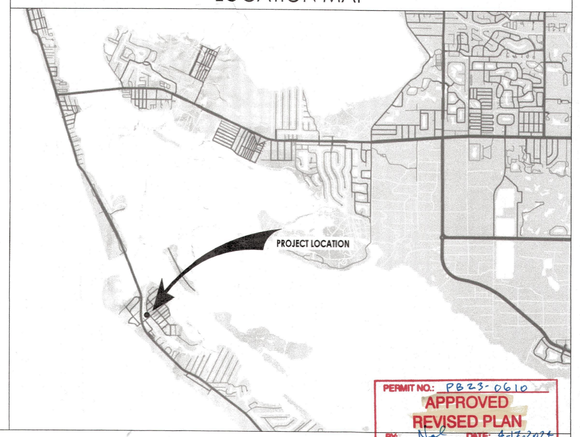

PERMIT NO.: PB23-0610
APPROVED
REVISED PLAN
BY: NA DATE: 4-17-2024

DAYLIGHT PLANE (EAST ELEVATION)

(DO NOT SCALE DRAWINGS)

NOA & FPA

CATEGORY	MANUFACTURER	MODEL	NOA/FPA
OUTSWING DOOR	ES WINDOWS	ES-910	NOA. 22-0407.08
CASEMENT WINDOWS	ES WINDOWS	ES-P252	NOA. 20-1118.05
FIXED WINDOWS	ES WINDOWS	ES-8000T	NOA. 20-1118.02
SECTIONAL GARAGE DOOR	CLOPAY BLDG. PROD.	W6 DP36T	NOA. 20-0922.44
OPAQUE SINGLE DOOR	PLASTPRO	FIBERGLASS	FL-16094.7
SINGLE-PLY TPO ROOFING	GAF	EVERGUARD	NOA. 19-0617.04
FLOOD VENT	SMART-VENT	1540-620	FL-5822.3
GLASS RAILING	HARWARE & GLASS GR.	POSTLESS GLASS	NOA. 23-0714.07
GLASS RAILING	Q-RAILING	EASY GLASS 6926	NOA. 20-0612.01
PEDESTAL PAVER SYST.	BISON INNOVATIVE	PAVER TRAY	FL-27442.2

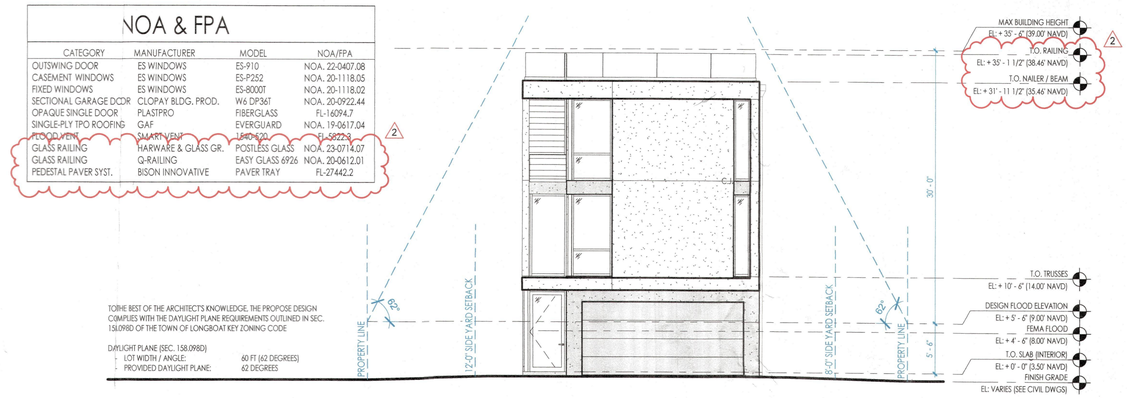

TO THE BEST OF THE ARCHITECT'S KNOWLEDGE, THE PROPOSE DESIGN COMPLIES WITH THE DAYLIGHT PLANE REQUIREMENTS OUTLINED IN SEC. 158.098D OF THE TOWN OF LONGBOAT KEY ZONING CODE

DAYLIGHT PLANE (SEC. 158.098D)
- LOT WIDTH / ANGLE: 60 FT (62 DEGREES)
- PROVIDED DAYLIGHT PLANE: 62 DEGREES

BLDG PERMIT PLANS
FILE
Copy of Record

leader DESIGNSTUDIO
Leader Design Studio, LLC
FL-AR98232

1003 North Orange Ave., Suite A2
Sarasota, Florida 34326
O: (941) 404-8055

GENERAL CONTRACTOR
The Vision Group, LLC
1900 Main Street Suite 205
Sarasota, Florida 34228
O: (941) 357-4040

STRUCTURAL ENGINEER
Apex Consulting Engineers
4315 53rd Avenue East
Bradenton, Florida 34203
O: (941) 365-1900

ENERGY & SUSTAINABILITY CONSULTANTS
ESC, LLC
1348 Fruitville Road
Sarasota, Florida 34236
O: (941) 957-1100

INTERIOR DESIGNER
SAWA Design Studio
1003 North Orange Ave., Suite A2
Sarasota, Florida 34236
O: (941) 564-9291

MECHANICAL, ELECTRICAL, AND PLUMBING REVIEWS WILL BE DEFERRED TO FIELD INSPECTORS

MAJHER RESIDENCE
7017 Longboat Drive North
Longboat Key, 34228

Project number	LDS-2203
Date	04.27.2023
Drawn by	DM
Checked by	CL
Phase	PERMIT SET

SEAL

STATE OF FLORIDA
CHRISTOPHER R. LEADER
AR98232
REGISTERED ARCHITECT

"To the best of the Architect's or Engineer's knowledge, the plans and specifications comply with the applicable minimum building codes and applicable fire safety standards as determined by local authority in accordance with Chapter 553 and 663 of Florida Statutes."

Christopher Leader
AR 98232

REVISION

No.	Description	Date
1	BLDG. DEPT. COMMENTS	08/16/23
2	PEDESTAL SYSTEM	02/13/24

SHEET

COVER SHEET

RECEIVED
APR 2 - 2024
TOWN OF LONGBOAT KEY
Planning, Zoning & Building

BLDG PERMIT PLANS
FILE
Copy of Record

A0.0

NPDES

LELAND E. BEDWELL SURVEYING INC.

PROFESSIONAL LAND SURVEYORS, & MAPPERS–PSM#5884
3423 55TH DRIVE EAST, BRADENTON, FLORIDA, 34203
LICENSE BUSINESS # LB7113
OFFICE 941-753-9994
FAX 941-739-8318

COPY RIGHT BY BEDWELL SURVEYING INC. YEAR 2019

SHEET# 2 OF 2
NOT VALID WITHOUT SHEET 1 OF 2

PURPOSE OF SURVEY
LOT SPLIT/CONSOLIDATION

SITE ADDRESS
XXX LONGBOAT DR
LONGBOAT KEY, FL 34228

MAP OF SURVEY

BOUNDARY SURVEY & VISIBLE IMPROVEMENTS
"SKETCH OF DESCRIPTION PARCEL 1"
TOPOGRAPHIC SPOT ELEVATIONS

CURVE DATA

Curve number 1(D)(M)
Radius= 671.62'
Delta= 07°40'33"
Arc= 89.97'
Tangent= 45.05'
Chord= 89.91'
Chord Brg.= N.29°29'00"W.

Curve number 2(D)(M)
Radius= 671.62'
Delta= 05°07'15"
Arc= 60.03'
Tangent= 30.03'
Chord= 60.01'
Chord Brg.= N.23°05'06"W.

Curve number 3(D)
Radius= 796.62'
Delta= 02°39'09"
Arc= 36.88'
Tangent= 18.44'
Chord= 36.88'
Chord Brg.= S.22°10'08"E.

Curve number 4(D)(M)
Radius= 796.62'
Delta= 01°19'43"
Arc= 18.47'
Tangent= 9.24'
Chord= 18.47'
Chord Brg.= S.24°09'34"E.

Curve number 5(D)
Radius= 796.62'
Delta= 09°14'22"
Arc= 128.46'
Tangent= 64.37'
Chord= 128.33'
Chord Brg.= S.28°06'53"E.

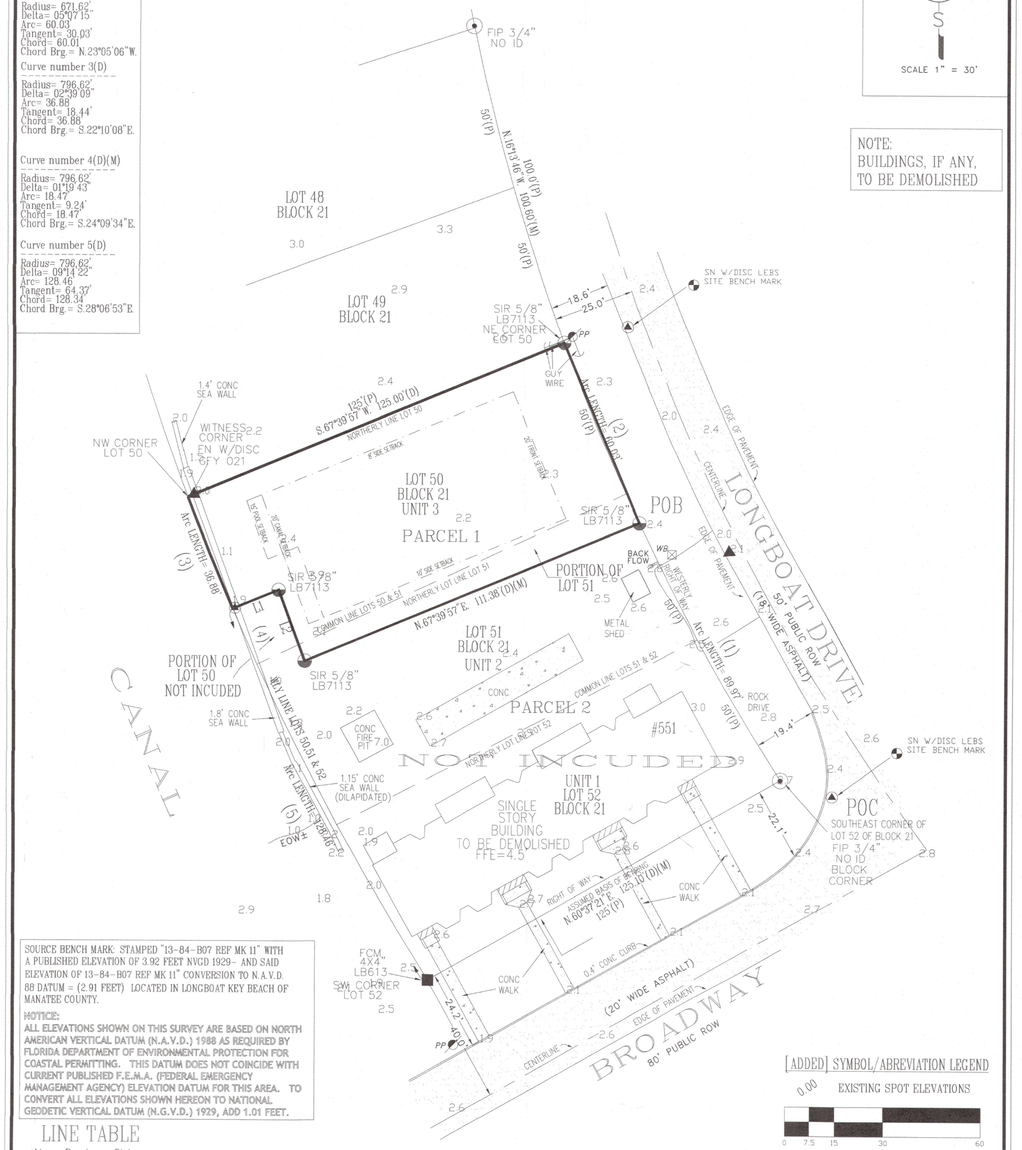

NOTE:
BUILDINGS, IF ANY, TO BE DEMOLISHED

SCALE 1" = 30'

SOURCE BENCH MARK: STAMPED "13-84-B07 REF MK 11" WITH A PUBLISHED ELEVATION OF 3.92 FEET NVGD 1929- AND SAID ELEVATION OF 13-84-B07 REF MK 11" CONVERSION TO N.A.V.D. 88 DATUM = (2.91 FEET) LOCATED IN LONGBOAT KEY BEACH OF MANATEE COUNTY.

NOTICE:
ALL ELEVATIONS SHOWN ON THIS SURVEY ARE BASED ON NORTH AMERICAN VERTICAL DATUM (N.A.V.D.) 1988 AS REQUIRED BY FLORIDA DEPARTMENT OF ENVIRONMENTAL PROTECTION FOR COASTAL PERMITTING. THIS DATUM DOES NOT COINCIDE WITH CURRENT PUBLISHED F.E.M.A. (FEDERAL EMERGENCY MANAGEMENT AGENCY) ELEVATION DATUM FOR THIS AREA. TO CONVERT ALL ELEVATIONS SHOWN HEREON TO NATIONAL GEODETIC VERTICAL DATUM (N.G.V.D.) 1929, ADD 1.01 FEET.

LINE TABLE

Line	Bearing	Distance
L1	N.67°39'57"E.	15.35'
L2	S.20°15'29"E.	23.14'

NOT A CERTIFICATION OF TITLE, ZONING, EASEMENTS OR FREEDOM OF ENCUMBRANCES.
NOT VALID WITHOUT SURVEYOR'S SIGNATURE AND ORIGINAL EMBOSSED SEAL
PLEASE REFER TO REVERSE SIDE OF SHEET 1 OF 2 FOR GENERAL NOTES & ABBREVIATIONS.

[ADDED] SYMBOL/ABBREVIATION LEGEND
0.00 EXISTING SPOT ELEVATIONS
0 7.5 15 30 60
GRAPHIC SCALE

(NOTE:)
IN COMPLIANCE WITH FLORIDA STATUTES 5J-17.052.2 (D) (4) (IF LOCATION OF EASEMENTS OR RIGHT-OF-WAY OF RECORD, OTHER THAN THOSE ON RECORD PLAT, IS REQUIRED, THIS INFORMATION MUST BE FURNISHED TO THE SURVEYOR AND MAPPER.

NOTE;
THIS SURVEY MEETS THE STANDARDS OF PRACTICE FOR SURVEYING IN THE STATE OF FLORIDA, AS SET FORTH BY THE FLORIDA BOARD OF LAND SURVEYORS. RULE NO. 5J-17, FLORIDA ADMINISTRATIVE CODE. PURSUANT TO SECTION 472.027 OF THE FLORIDA STATUTES.

NO.	REVISIONS	DATE	BY
	LOT SPLIT 2-15-22 (Not a field updated survey)		

SEE SHEET 1 OF 2 FOR SYMBOLS, LEGENDS AND REPORT OF SURVEY

CERTIFICATION :
SEE PAGE 1 OF 2 FOR SIGNATURE AND SEAL
THIS PAGE NOT VALID WITHOUT PAGE 1 OF 2
LELAND E. BEDWELL, PSM #5884

SURVEY IS VALID FOR 365 DAYS.
ORIGINAL SURVEY DATE : 11-10-2020

DRAWN BY:	DATE DRAFTED:	CHECKED BY:	SCALE:	PROJECT#
SH-KO	5-6-22		1"=30'	19-305-LS-P1-REV

leader DESIGNSTUDIO
Leader Design Studio, LLC
FL-AR98232

1003 North Orange Ave., Suite A2
Sarasota, Florida 34326
O: (941) 404-8055

GENERAL CONTRACTOR
The Vision Group, LLC
1900 Main Street Suite 205
Sarasota, Florida 34228
O: (941) 357-4040

STRUCTURAL ENGINEER
Apex Consulting Engineers
4315 53rd Avenue East
Bradenton, Florida 34203
O: (941) 365-1900

ENERGY & SUSTAINABILITY CONSULTANTS
ESC, LLC
1348 Fruitville Road
Sarasota, Florida 34236
O: (941) 957-1100

INTERIOR DESIGNER
SAWA Design Studio
1003 North Orange Ave., Suite A2
Sarasota, Florida 34236
O: (941) 564-9291

MAJHER RESIDENCE

7017 Longboat Drive North
Longboat Key, 34228

Project number	LDS-2203
Date	04.27.2023
Drawn by	-
Checked by	--
Phase	PERMIT SET

SEAL

REVISION

No.	Description	Date

BLDG PERMIT PLANS FILE
Copy of Record

SHEET
EXISTING SURVEY

RECEIVED
SEP 14 2023
TOWN OF LONGBOAT KEY
Planning, Zoning & Building

ASX

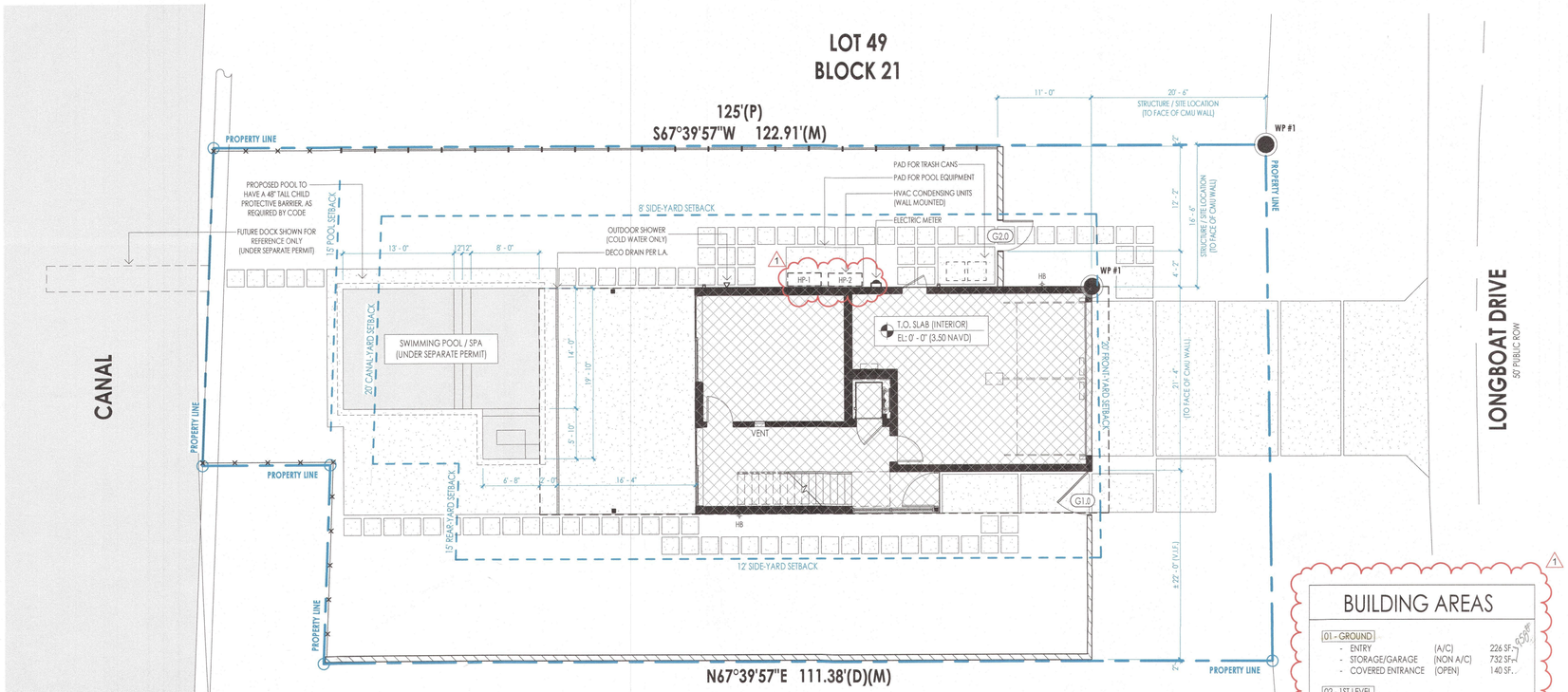

1 AS1.0 PROPOSED SITE PLAN
1/8" = 1'-0"

NOTES:

1. THE LOWEST FLOOR IS ONLY USEABLE SOLELY FOR VEHICLE PARKING, LIMITED STORAGE AND BUILDING ACCESS.
2. R322.1.2 STRUCTURAL SYSTEMS OF BUILDINGS AND STRUCTURES SHALL BE DESIGNED, CONNECTED AND ANCHORED TO RESIST FLOTATION, COLLAPSE OR PERMANENT LATERAL MOVEMENT DUE TO STRUCTURAL LOADS AND STRESSES FROM FLOODING EQUAL TO THE DESIGN FLOOD ELEVATION, FC 2020- 7TH EDITION – RESIDENTIAL – SECTION R322.1.2 FEMA TB#9, NFIP CFR 44 SEC 60.3 (A)(3) AND ASCE 24
3. ALL BUILDING MATERIALS INSTALLED BELOW THE DFE SHALL BE FLOOD DAMAGE-RESISTANT MATERIALS. AT MINIMUM, CAN WITHSTAND FLOOD WATERS FOR 72 HOURS WITHOUT DAMAGE. FEMA TECHNICAL BULLETIN #2 AND FBC 2020 - 7TH EDITION – RESIDENTIAL – SECTION R322.1.8
4. THE PROJECT MUST COMPLY WITH "BEST MANAGEMENT PRACTICES (BMP) FOR CONSTRUCTION SITE EROSION CONTROL OF STORM WATER RUN-OFF".

BUILDING AREAS

01 - GROUND			
- ENTRY	(A/C)	226 SF.	
- STORAGE/GARAGE	(NON A/C)	732 SF.	
- COVERED ENTRANCE	(OPEN)	140 SF.	
02 - 1ST LEVEL			
- LIVING SPACE	(A/C)	1,416 SF.	
- COVERED BALCONY	(OPEN)	221 SF.	
03 - 2ND LEVEL			
- LIVING SPACE	(A/C)	1,215 SF.	
- COVERED BALCONY	(OPEN)	221 SF.	
04 - ROOF TOP			
- TERRACE	(OPEN)	568 SF.	
- TOTAL A/C AREA:		2,857 SF.	
- TOTAL NON A/C AREA:		732 SF.	
- TOTAL OPEN AREA:		1,150 SF.	
- TOTAL BUILDABLE AREA:		4,739 SF.	

GATE SCHEDULE

KEY	ROOM NAME	WIDTH	HEIGHT	DETAILS HEAD	DETAILS JAMB	DETAILS JAMB	DETAILS SILL	NOTES
G1.0	--	SEE PROFILES		--	--	--	--	PROVIDE SHOP DWGS
G2.0	--	SEE PROFILES		--	--	--	--	PROVIDE SHOP DWGS

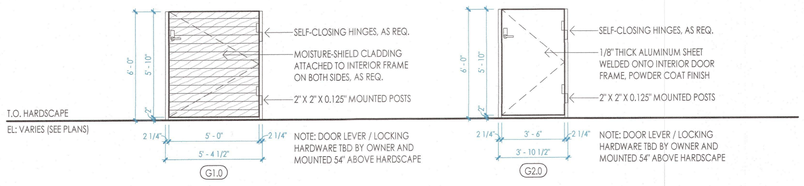

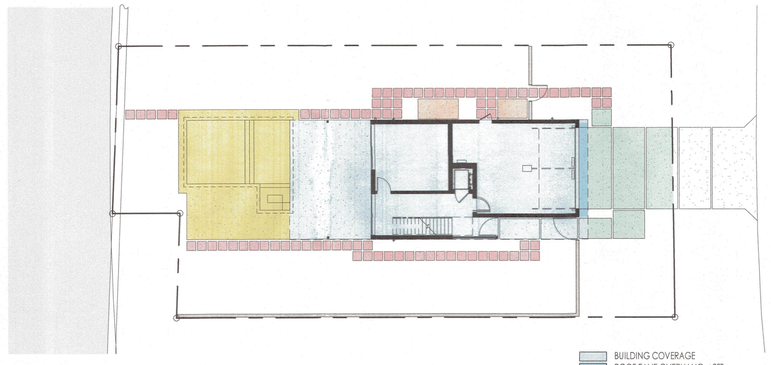

2 AS1.0 OPEN SPACE DIAGRAM
1/16" = 1'-0"

SITE LEGEND

(ALSO SEE LANDSCAPE DWGS)

- PROPOSED IMPERVIOUS SURFACE PER L.A.
- BODY OF WATER FOR REFERENCE
- PROPOSED STRUCTURE
- PROPOSED PERVIOUS WOOD DECK
- 48 INCH TALL METAL FENCE PER L.A.
- 60 INCH TALL WOOD FENCE PER L.A.
- 60 INCH TALL FOAM WALL W/ STUCCO FINISH
- SETBACK LINE
- PROPERTY LINE

KEY NOTES

1. LINE OF ROOF / STRUCTURE / CEILING / DOOR ABOVE.
2. COLUMN WRAPPED IN BRAKE METAL, SEE STRUCTURAL DWGS.
3. ROOFTOP DECK STEEL POSTS, SEE STRUCTURAL DWGS.
4. BRAKE METAL WRAP, AS REQ. SEE WINDOW DETAILS.
5. ELECTRICAL METER INSTALLED ABOVE D.F.E.
6. PRE-FABRICATED MAILBOX LOCATION, SEE SPECIFICATIONS.
7. ROOFTOP DECK STEEL POSTS, SEE STRUCTURAL DWGS.
8. NOT USED.
9. NOT USED.
10. NOT USED.
11. NOT USED.
12. NOT USED.
13. NOT USED.
14. NOT USED.

GENERAL SITE NOTES

1. INFORMATION ON THIS SITE OBTAINED FROM BOUNDARY, EXISTING TOPOGRAPHY AND TREE SURVEY PREPARED BY LELAND E. BEDWELL SURVEYING, INC.
2. SEE LANDSCAPE DRAWINGS FOR ANY TREE MITIGATION, PROPOSED LANDSCAPE PLAN AND EXTERIOR HARDSCAPE ITEMS NOTED FOR THE PROJECT.
3. SEE LANDSCAPE DRAWINGS FOR ALL FINISH GRADING AND SURVEY FOR ALL EXISTING TREE LOCATIONS.
4. UNLESS NOTED OTHERWISE, IT IS THE INTENT THAT ALL EXISTING VEGETATION OUTSIDE OF THE FOOTPRINT TO REMAIN. PROTECT EXISTING VEGETATION FROM DAMAGE DUE TO CONSTRUCTION PROCESSES AND PROCEDURES. PROVIDE BARRIERS TO PROTECT ALL VEGETATION WITHIN THE LIMITS OF CONSTRUCTION.
5. PRIOR TO CUTTING OR PRUNING ANY EXISTING VEGETATION OBTAIN OWNER'S APPROVAL.
6. PRIOR TO CONSTRUCTION, LOCATE ALL UNDERGROUND UTILITIES IN THE AREAS WHERE WORK IS BEING DONE. NOTIFY ARCHITECT OF ANY CONFLICTS.
7. PERFORM EXCAVATION WORK IN COMPLIANCE WITH APPLICAL LOCAL GOVERNING AUTHORITIES, AS REQUIRED.
8. CALL BEFORE YOU DIG: CONTACT CALL BEFORE YOU DIG SERVICE PRIOR TO COMMENCING ANY EARTHWORK OPERATIONS. PHONE NUMBER IS 1-800-922-4455.
9. BEFORE COMMENCING EARTHWORK, MEET WITH REPRESENTATIVES OF THE GOVERNING AUTHORITIES, OWNER, ARCHITECT, CONSULTANTS, AND OTHER CONCERNED ENTITIES. NOTIFY PARTICIPANTS AT LEAST 3 WORKING DAYS PRIOR TO CONVENING CONFERENCE. RECORD DISCUSSIONS / AGREEMENTS AND FURNISH A COPY TO EACH PARTICIPANT.
10. STATEMENT OF COMPLIANCE: CONTRACTOR SHALL COMPLY WITH: "GUIDANCE MANUAL FOR DEVELOPING BEST MANAGEMENT PRACTICES" FOR THE CONSTRUCTION OF SITE RUN-OFF.

PROPERTY INFORMATION

TOWN OF LBK	PARCEL NUMBER	7801500259
	SEC/TWP/RGE	15-35S-16E
	CURRENT LAND AREA	7,161 SF (0.16 ACRES)
	NEIGHBORHOOD	2041; LONGBOAT KEY
	NEIGHBORHOOD	2041; LONGBOAT KEY
	LEGAL DESCRIPTION (SHORT)	THAT PART OF LOTS 50 & 51 OF BLK 21 OF REVISED LONG BEACH, ACCORDING TO THE PLATE THEREOF AS REC IN PB 6 PG 66 PRMCF, TOGETHER WITH PERPETUAL WATER RIGHTS IN CERTAIN ARTESIAN...

BUILDING CODE ANALYSIS

CODE	CODE REFERENCES	FBC FLORIDA BUILDING CODE 2020 FBC FLORIDA BUILDING CODE - PLUMBING CODE 2020 FBC FLORIDA BUILDING CODE - MECHANICAL CODE 2020 NEC NATIONAL ELECTRICAL CODE 2017 RFBC RESIDENTIAL FLORIDA BUILDING CODE, ENERGY EFF 2020
BUILDING	USE & OCCUPANCY (CHAPTER 3)	GROUP R-3
	TYPE OF CONSTRUCTION (CHAPTER 6)	TYPE V-B
	AUTOMATIC FIRE SPRINKLER SYSTEM	NON-SPRINKLERED
	BASIC WIND SPEED (CHAPTER 16)	150 MPH (SEE STRUCTURAL DWGS)
	WIND EXPOSURE (CHAPTER 16)	EXPOSURE D (SEE STRUCTURAL DWGS)
	BUILDING TYPE (CHAPTER 16)	ENCLOSED (SEE STRUCTURAL DWGS)
	FLOOD ELEVATION (FEMA)	FEMA FLOOD ELEVATION: ZONE AE (EL: 8.00') DESIGN FLOOD ELEVATION: EL: 9.00' NAVD (FEMA + 1.00')

ZONING CODE

TOWN OF LONGBOAT KEY	ZONING CLASSIFICATION (SEC. 158.058)	R-65F 'SINGLE-FAMILY HIGH-DENSITY RESIDENTIAL DISTRICT'
	SETBACKS (SEC.158.064C)	FRONT YARD: 20 FT SIDE YARD: 8 FT / 20 FT COMBINED REAR YARD: 15 FT WATERFRONT YARD: 20 FT (CANAL) POOL (CANAL): 15 FT
	MAX HEIGHTS (SEC. 158.064C)	BUILDING HEIGHT: 30 FT (ABOVE D.F.E.)
	DAYLIGHT PLANE (SEC. 158.098D)	LOT WIDTH / ANGLE: 60 FT (62 DEGREES) DAYLIGHT PLANE: SEE COVER SHEET A0.0
	BUILDING COVERAGE (SEC.158.064C)	MAX. BUILDING COVERAGE: 30 % ALLOWED (2,148 SF) ENCLOSING BUILDING: 1,400 SF EXTERIOR BALCONIES: 220 SF ROOF EAVE OVERHANG > 2FT (PER SEC. 158.094): 98 SF TOTAL BUILDING COVERAGE: 1,718 SF (23.99 %)
	OPEN SPACE (SEC.158.064C)	MIN. OPEN SPACE: 50 % ALLOWED (3,580 SF) BUILDING COVERAGE: (PER SEC. 158.064C) 1,718 SF. ROOF EAVE OVERHANG < 2FT: 42 SF DRIVEWAY / ENTRY PADS: 410 SF. POOL SHELL & DECK: 696 SF. POOL EQUIPMENT PAD: 70 SF. 2X2 WALKING PADS: 340 SF. PRIVACY SITE WALL: 80 SF TOTAL OPEN SPACE: 3,356 SF (46.86 %)

leader DESIGNSTUDIO
Leader Design Studio, LLC
FL-AR98232
1003 North Orange Ave., Suite A2
Sarasota, Florida 34326
O: (941) 404-8055

GENERAL CONTRACTOR
The Vision Group, LLC
1900 Main Street Suite 205
Sarasota, Florida 34228
O: (941) 357-4040

STRUCTURAL ENGINEER
Apex Consulting Engineers
4315 53rd Avenue East
Bradenton, Florida 34203
O: (941) 365-1900

ENERGY & SUSTAINABILITY CONSULTANTS
ESC, LLC
1348 Fruitville Road
Sarasota, Florida 34236
O: (941) 957-1100

INTERIOR DESIGNER
SAWA Design Studio
1003 North Orange Ave., Suite A2
Sarasota, Florida 34236
O: (941) 564-9291

MAJHER RESIDENCE

7017 Longboat Drive North
Longboat Key, 34228

Project number	LDS-2203
Date	04.27.2023
Drawn by	DM
Checked by	CL
Phase	PERMIT SET

SEAL

STATE OF FLORIDA · CHRISTOPHER M. LEADER · REGISTERED ARCHITECT · AR98232

"To the best of the Architect's or Engineer's knowledge, the plans and specifications comply with the applicable minimum building codes and applicable fire safety standards as determined by local authority in accordance with Chapter 553 and 663 of Florida Statutes."

Christopher Leader
AR 98232

REVISION

No.	Description	Date
1	BLDG. DEPT. COMMENTS	08/16/23

BLDG PERMIT PLANS
FILE
Copy of Record

RECEIVED
SEP 14 2023
TOWN OF LONGBOAT KEY
Planning, Zoning & Building

SHEET
PROPOSED SITE PLAN

AS1.0

NOTES:

BEST MANAGEMENT PRACTICES FOR CONSTRUCITON SITE EROSION CONTROL OF STORMWATER RUNOFF:

-A SILT FENCE SHALL BE ERECTED AROUND THE PERIMETER OF THE CONSTRUCTION AREA TO PROVIDE EROSION CONTROL AND TO PROVIDE "BEST MANAGEMENT PRACTICES" (BMP) DURING CONSTRUCTION.

-CONTRACTOR SHALL VISIT THE PROJECT SITE PRIOR TO ANY CONSTRUCTION OR DEMOLITION TO VERIFY ALL CONDITIONS. CONTRACTOR SHALL REPORT IN WRITING TO THE OWNER OR THEIR AGENT ANY DISCREPANCY PRIOR TO ANY WORK.

-CONTRACTOR IS RESPONSIBLE FOR A CLEAN, SAFE WORK ENVIRONMENT.

-CONTRACTOR IS RESPONSIBLE TO PROPER DISPOSAL OF ANY CONSTRUCTION MATERIAL AND DEBRIS. RECEIPTS OF DISPOSAL ARE TO BE KEPT FOR RECORD.

1

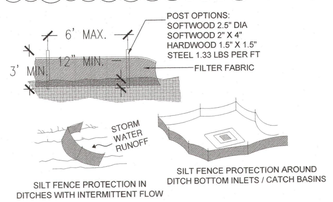

SILT FENCE APPLICATIONS
NOT TO SCALE

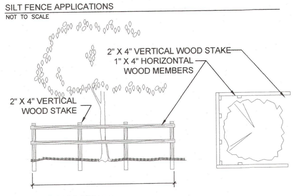

TREE BARRICADE DETAILS
NOT TO SCALE

GENERAL DRAINAGE NOTES:

LOT AREA: 7,161 SF
MAX LOT COVERAGE: 3,580.5 SF
LOT COVERAGE SHOWN: 3,243 SF
FOOTPRINT OF HOUSE: 1132 SF
DRIVEWAY AND HARDSCAPE: 1931 SF
POOL & SPA: 360 SF

DIRECTION OF FLOW AT GRADE
SWALE
X.X' EXISTING ELEVATION
X.X' PROPOSED ELEVATION
4" PIPE BUBBLER BOX W/ 4" PIPE
4" PIPE TIE INTO ROOF DRAIN/DOWNSPOUT
4" PIPE TERMINATE W/ 6" POP UP EMITTER

1. VERTICAL RISE NOT TO EXCEED 1" VERTICAL IN 6" HORIZONTAL DISTANCE WITHIN 5' FEET (5') OF ANY PROPERTY LINE.

2. ALL ON-SITE DRAINAGE SHALL BE DIRECTED BY SWALES AND/OR UNDERGROUND CONVEYANCE TO OFF-SITE DRAINAGE FACILITY.

3. THE DISCHARGE OF STORM WATER FROM THE PARCEL SHALL DRAIN TO A STREET, DRAINAGE GREENBELT, OR OTHER ESTABLISHED PUBLIC OR PRIVATE DRAINAGE FACILITY, WITHOUT ADVERSELY AFFECTING THE PROPER DRAINAGE OF ADJOINING PARCELS OF LAND.

4. SITE DRAINAGE MUST BE CONSISTENT WITH SUBDIVISION STORMWATER MANAGEMENT PLAN, IF APPLICABLE..

5.SWALE SLOPES WILL BE A MINIMUM OF 0.2 % LONGITUDINAL SLOPE.

6. ALL REQUIRED SWALES OR OTHER SYSTEMS MUST BE IN PLACE PRIOR TO COMMENCEMENT OF CONSTRUCTION AND MAINTAINED DURING THE COURSE OF CONSTRUCTION UNTIL FINAL INSPECTIONS HAVE BEEN APPROVED.

7. DOWNSPOUTS SHALL BE AT LEAST 10' AWAY FROM PROPERTY LINE AND DIRECTED AWAY FROM ADJACENT PROPERTY, DRAINING TOWARDS SWALES.

8. PROPOSED TREES SHALL NOT BE LOCATED IN DRAINAGE SWALES.

9. ALL WORK SHALL COMPLY WITH BEST MANAGEMENT PRACTICES (BMP) FOR CONSTRUCTION SITE EROSION CONTROL OF STORM WATER RUN OFF AND SHALL COMPLY WITH THE NATIONAL POLLUTANT DISCHARGE ELIMINATION SYSTEM (NPDES).

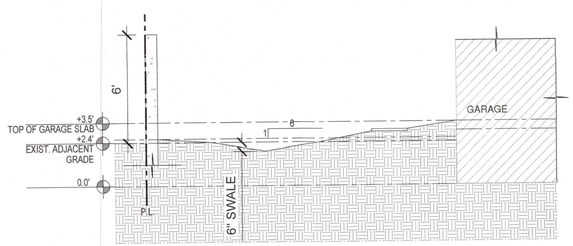

2A L-1.0 SOUTH PROPERTY LINE SECTION
SCALE: 1/4"=1'-0"

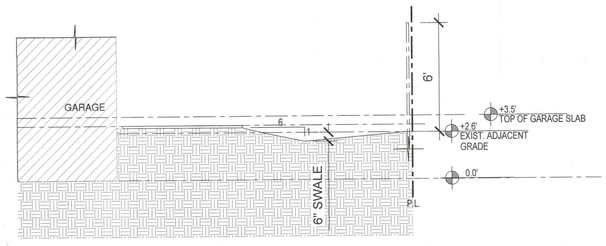

2B L-1.0 NORTH PROPERTY LINE SECTION
SCALE: 1/4"=1'-0"

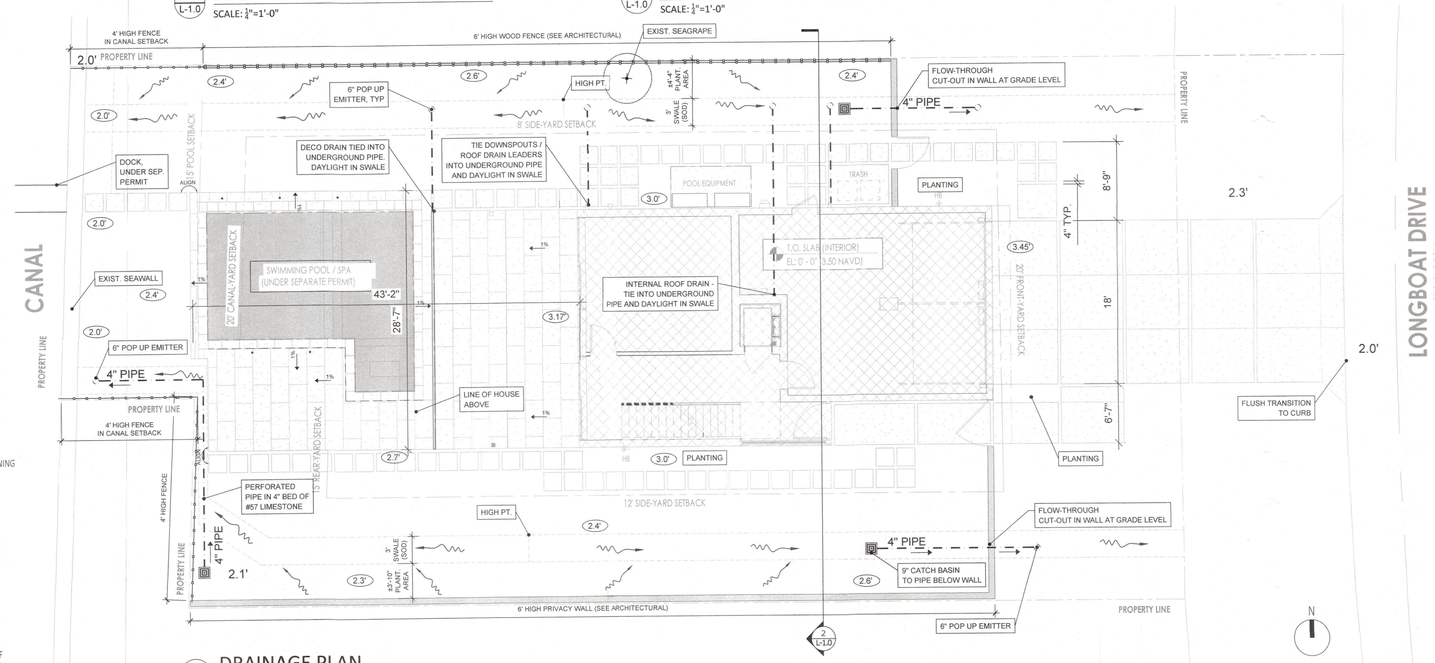

1 L-1.0 DRAINAGE PLAN
SCALE: 1/8"=1'-0"

Figure 9 Studio, PLLC
5349 Durango Ave | Sarasota, FL
krystyna@figure9studio.com | AR 99998

STATE OF FLORIDA
KRYSTYNA SZNURKOWSKI
AR99998
REGISTERED ARCHITECT

FOR PERMIT SUBMITTAL
NOT FOR CONSTRUCTION

MAJHER RESIDENCE
LONGBOAT KEY, FL

No.	Revision/Issue	Date
1	PERMIT COMMENT RESP.	7.23.23

BLDG PERMIT PLANS
FILE
Copy of Record

RECEIVED
SEP 14 2023
TOWN OF LONGBOAT KEY
Planning, Zoning & Building

Project: MAJHER
Date: 2023.04.12
Scale: AS NOTED

Sheet: L-1.0
DRAINAGE

VENCULAR TRAFFIC

CEMENTITIOUS ADHESIVE OVERLAY, CONCRETE BASE INSTALLATION

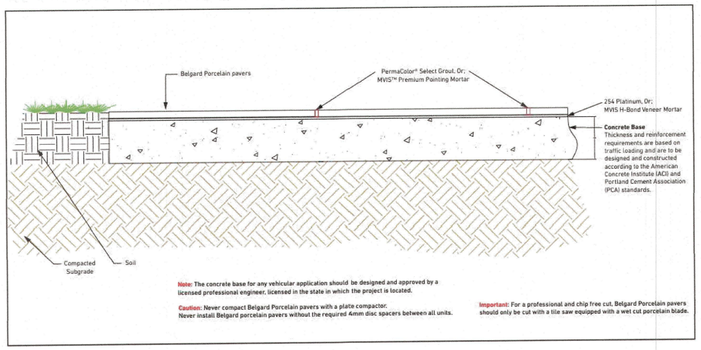

INSTALLATION NOTES:

Follow the detail drawing.

Ensure that pavement is constructed with a 2% slope and that it is pitched away from any building.

Referenced approved Cementitious Adhesives: Laticrete 254 Platinum or MVIS Hi-Bond Veneer Mortar

Referenced approved joint Cement Grout - Laticrete Permacolor, or Permacolor Select Grout or MVIS Premium Pointing Mortar

100% Silicone Caulk: Laticrete Latasil

For Cementitious adhesive and grout installation, refer to the manufacturer's technical instructions and specifically as they relate to outdoor installations.

For concrete foundation slabs that are not large enough to require contraction / control joints, a minimum 4mm (1/8" to 3/16") grout joint is acceptable, but for larger concrete foundation slabs that do require contraction / control joints, the joint width should be a 3/8". It is absolutely imperative that all contraction / control joints be located in the joint line of installed porcelain pavers and not beneath a paver.

Caution: If a Porcelain Paver is installed over a control joint, the paver will reflectively crack along the contraction / control joint beneath it.

PLANKS

When installing porcelain planks (16 x 48, 12 x 48 & 8 x 48), always lay the pattern of ⅓'s. These should not be placed next to each other at 50%.

PEDESTRIAN FOOT TRAFFIC

STEPPING STONE SAND SET ON COMPACTED ROAD BASE INSTALLATION

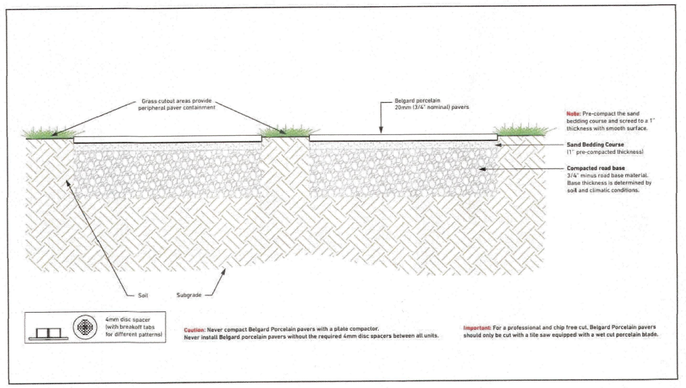

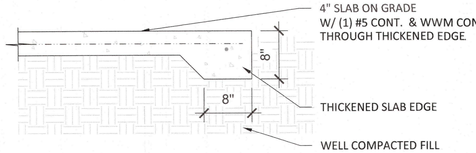

2 / L-2.0 DRIVEWAY DETAIL
SCALE: 1"=1'-0"

KEYED NOTES

	DESCRIPTION	NOTES	SAMPLES/MOCKUP FOR OWNER APPROVAL	SHOP DRAWINGS	CUT SHEET	ATTIC STOCK/ SPARE PARTS
1	SAND-SET PAVERS - BELGARD MIRAGE GLOCAL. SAND SET, 24"X24"	COLOR TBD, CONFIRM W/ OWNER SEE PRODUCT DTL TO LEFT				
2	SAND-SET PAVERS - BELGARD MIRAGE GLOCAL. MUDSET ON SLAB, 24"X48"	FINAL LAYOUT / PATTERN TBD CONFIRM W/ OWNER SEE PRODUCT DTL TO LEFT				
3	POOL & SPA - ELEC HEAT PUMP, GAS HEATER, SALT CHLORINATION SYSTEM.	PEBBLESHEEN AND WATERLINE TILE TBD (CONFIRM W/ OWNER)				
4	QUAKER PLASTICS STREAMLINE DRAIN. SEE POOL SECTION.	SEE 1/L-2.1				
P.A.	PLANTING AREA - SEE PLANTING PLAN					
	SEE PLANTING PLAN FOR GFRC PLANTING VESSEL LOCATIONS					

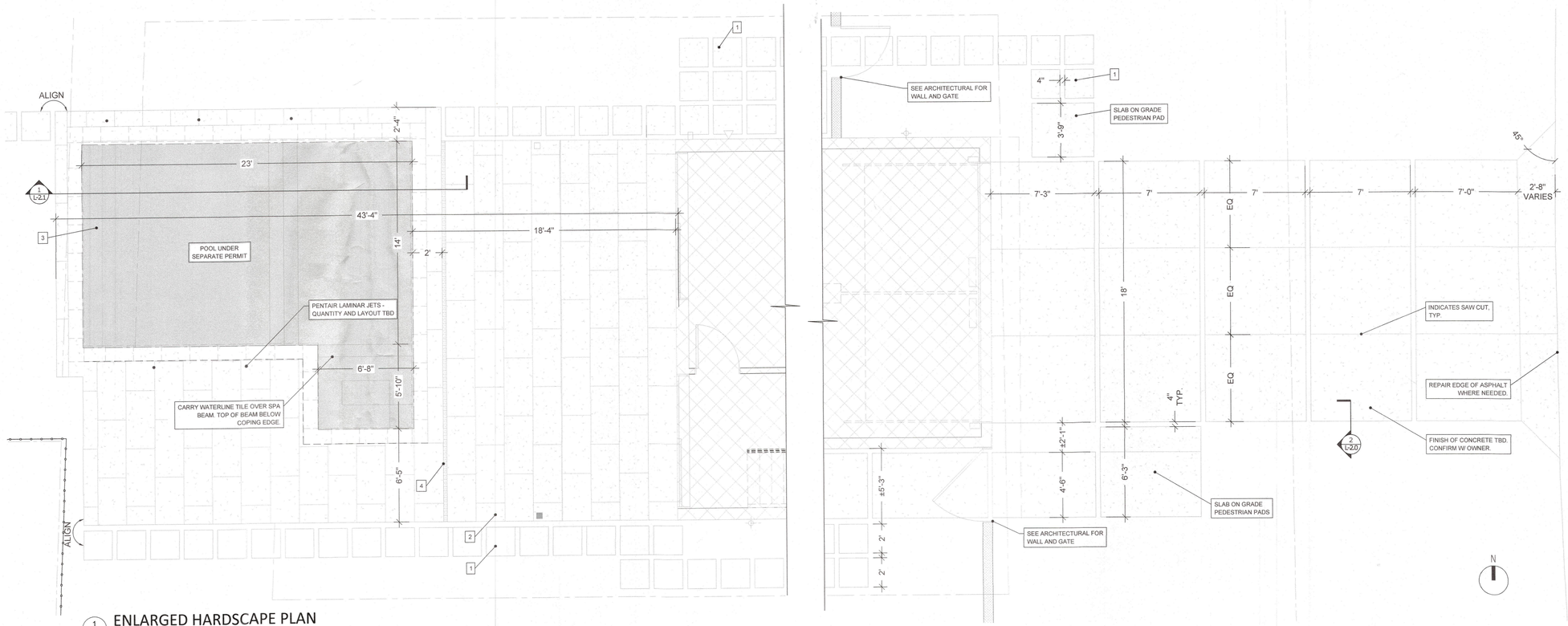

1 / L-2.0 ENLARGED HARDSCAPE PLAN
SCALE: 1"=1'-0"

Figure 9 Studio, PLLC
5349 Durango Ave | Sarasota, FL
krystyna@figure9studio.com | AR 99998

STATE OF FLORIDA · KRYSTYNA SZNURKOWSKI · AR99998 · REGISTERED ARCHITECT

FOR PERMIT SUBMITTAL
NOT FOR CONSTRUCTION

MAJHER RESIDENCE
LONGBOAT KEY, FL

No.	Revision/Issue	Date

BLDG PERMIT PLANS
FILE
Copy of Record

RECEIVED
SEP 14 2023
TOWN OF LONGBOAT KEY
Planning, Zoning & Building

Project: MAJHER
Date: 2023.04.12
Scale: AS NOTED

Sheet: L-2.0
HARDSCAPE

SYMBOL	ABBREV.	BOTANICAL NAME - COMMON NAME	SIZE	QTY	NOTES
	PE	PTYCHOSPERMA ELEGANS - SOLITAIRE PALM	14' O.A.	4	CURVE AS INDICATED ON PLAN
	RR	ROYSTONEA REGIA - ROYAL PALM	28' O.A.	3	MATCHED
	LP	LICULALA PELTATA - RUFFLED FAN PALM	5' O.A.	1	
	VM	VEITCHIA MONTGOMERYANA - MONTGOMERY PALM	18' O.A.	4	MATCHED
	PS	PSUEDOPHOENIX SARGENTII - BUCCANEER PALM	5' O.A.	2	
	CS	CORDIA SEBESTINA - ORANGE GEIGER TREE	8' O.A.	1	
	CG	CLUSIA GUTTIFERA - PITCH APPLES	6'-8' O.A.	15	FULL TO GROUND
	CES	CONOCARPUS ERECTUS SERICEUS - SILVER BUTTONWOOD	6' O.A.	11	MULTI TRUNK
	MF	MYCIANTHES FRAGRANS - SIMPSON STOPPER	4' O.A,	5	FULL TO GROUND
	ZP	ZAMIA PUMILA - COONTIE PALM	3 GAL.	5	18" H
	CIH	CHRYSOBALANUS ICACO HORIZONTALIS - HORIZ. COCOPLUM	3 GAL.	7	

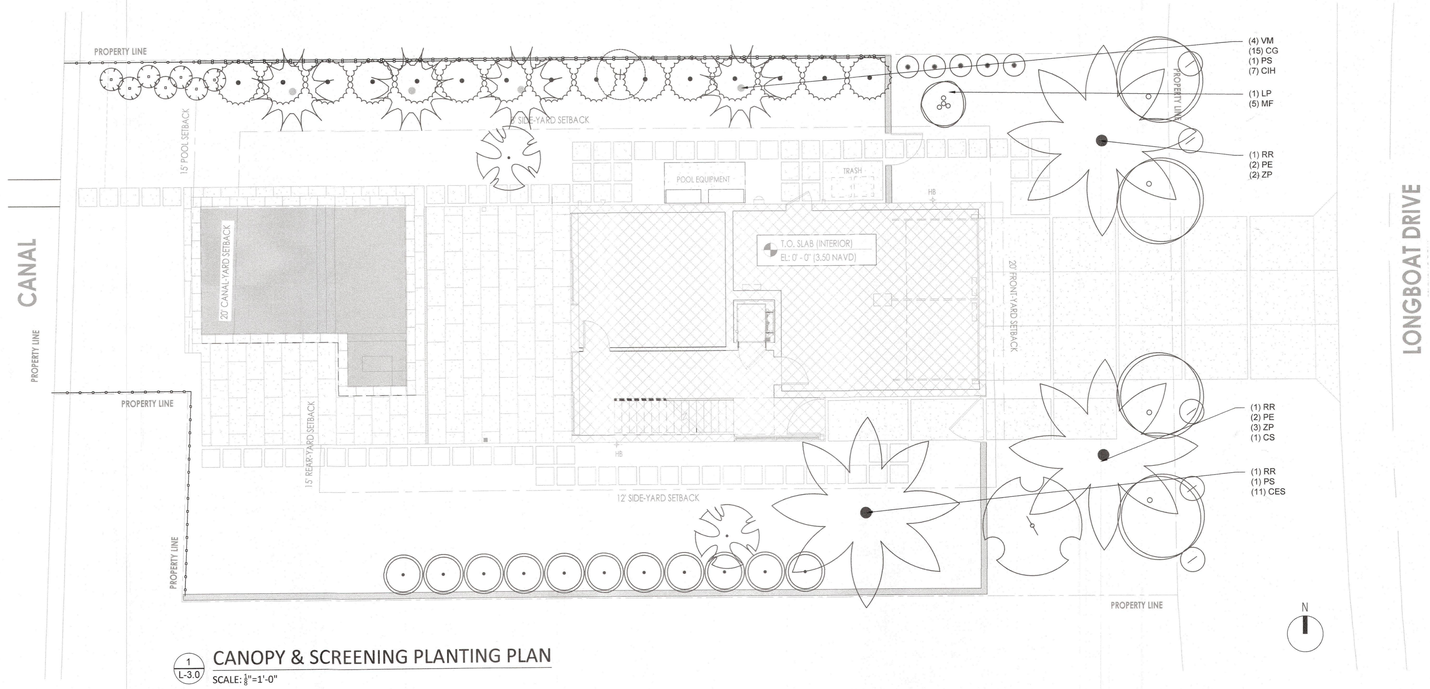

1 L-3.0 CANOPY & SCREENING PLANTING PLAN

SCALE: 1/8"=1'-0"

Figure 9 Studio, PLLC
5349 Durango Ave | Sarasota, FL
krystyna@figure9studio.com | AR 99998

STATE OF FLORIDA
KRYSTYNA SZNURKOWSKI
AR99998
REGISTERED ARCHITECT

FOR PERMIT SUBMITTAL
NOT FOR CONSTRUCTION

MAJHER RESIDENCE
LONGBOAT KEY, FL

No.	Revision/Issue	Date

BLDG PERMIT PLANS
FILE
Copy of Record

RECEIVED
SEP 14 2023
TOWN OF LONGBOAT KEY
Planning, Zoning & Building

Project: MAJHER
Date: 2023.04.12
Scale: AS NOTED

Sheet: L-3.0
PLANTING PLAN

SPECIFICATIONS

I. PROJECT DIRECTORY

Project:
A Custom Residence For
Bonnie & David Majher
7017 Longboat Drive North
Longboat Key, Florida 34228
LDS 2203

Architect:
Leader Design Studio
1003 North Orange Avenue, Suite A-2
Sarasota, FL 34236
T: 941-404-8055

Structural Engineer:
Apex Consulting Engineers BRD, LLC
4315 53rd Avenue East
Bradenton, Florida 34203
T: 941-365-1900

Mechanical Engineer:
ESC, Energy and Sustainability Consultants
1348 Fruitville Rd, Suite 203
Sarasota, Florida, 34236
T: 941-957-1100
C: 941-201-9465

Landscape Designer:
Figure 9 Studio, PLLC
5349 Durango Avenue
Sarasota, Florida, 34235

Interior Designer:
SAWA Design Studio
1003 North Orange Avenue, Suite A-2
Sarasota, FL 34236
T: 941-564-9291

II. INSTRUCTIONS TO BIDDERS

A. SUMMARY OF WORK: This contract includes providing materials, labor, equipment, and services to construct a new custom residence including a 2 car garage, storage, pool, spa, yard walls and gates, site work, irrigation, landscaping, hardscape and driveway, complete and ready for use in strict accordance with Contract Documents entitled MAJHER RESIDENCE dated April 27, 2023. Work shall include utility connections (including back flow restrictors, natural gas, etc.).
B. Bid shall be an agreement between Owner and Contractor Where the Basis of Payment is Cost Plus a Fee.
C. Bidder shall verify locations of ALL overhead and underground utilities including, but not limited to, telephone, gas, electrical, CATV, sewer, water, underground drainage systems, etc. It shall be the contractor's responsibility to procure and provide adequate location firms to locate and stake all utilities and include the cost of any required work on said utilities in their base Bid.
D. Trade Contractors and Subcontractors shall be required to examine and review a full set of Bidding Documents and current survey to ensure that any items that are necessary or are a part of his work that are included in a separate section of the construction documents are also included in his Bid.
E. Bidding Documents may be obtained at the Architect's studio. Reproduction of bidding documents is otherwise prohibited.
F. Re-engineering of systems or assemblies including fees for re-engineering, if required, shall be identified and included in substitution.

III. SPECIAL CONDITIONS

A. The following work shall be provided by Owner under separate contract.
1. Interior furnishings.

IV. GENERAL CONDITIONS

1. These Drawings and Specifications have been prepared expressly for the use by the Owner solely for the purpose of constructing the scope of work all as depicted and specified on the drawings and for the specific location as stated on the Title Sheet.
2. The Contractor accepts the relationship of trust and confidence established with the Owner to cooperate with the Architect and exercise the Contractor's skill and judgment in furthering the interests of the Owner; to furnish efficient business administration and supervision; to furnish at all times an adequate supply of workers and materials; and to perform the Work in an expeditious and economical manner consistent with the Owner's interests. The Owner agrees to furnish and approve, in a timely manner, information required by the Contractor and to make payments to the Contractor in accordance with the requirements of the Contract for Construction.
3. To the extent that the Drawings and Specifications are anticipated to require further development by the Architect, the Contractor has provided in the Price for such further development consistent with the Contract Documents and reasonably inferable therefrom. Such further development does not include such things as changes in scope, systems, kinds and quality of materials, finishes or equipment, all of which, if required, shall be incorporated by Change Order.
4. These drawings, as listed in the Drawing Index, along with the Specifications and Contract for Construction constitute the Instruments of Service and are considered a single entity. The Contractor is, therefore, bound by all information included.
5. Only those Drawings marked "Issued for Construction" by the Architect and the appointed Engineering Consultants shall be used as a basis for construction.
6. Any other use of these Documents for any reason other than that mentioned above must be authorized in writing by the Architect, the copyright holder.
7. The term 'Contractor' in the drawings shall refer to the General Contractor. The terms 'Client', and 'Owner' in the drawings shall refer to Bonnie and David Majher. It shall be the responsibility of the General Contractor to coordinate the subcontractor work with these Project Documents. The Contractor shall provide the Architect with a list of all sub-contractors prior to commencing the work.
8. The Contractor shall contact the Architect for coordination of staging and refuse removal prior to executing the Contract for Construction. Any adjustments in the Contract Amount or duration due to the Clients' requirements shall be made prior to Contract Execution.
9. All new items as depicted and specified on the drawings shall be provided and installed by the General Contractor unless otherwise noted.
10. The Architect shall be notified in writing prior to receipt of bids of conflicts, occurring in or between Drawings and Specifications. In a case of inconsistency between Drawings and Specifications, the Architect will make a written interpretation. Failure to give notice and to have received clarification shall not relieve Contractor from responsibility of accomplishing work in accordance with directions of, and interpretations by, Architect subsequent to receipt of bids at no additional cost to Owner.
11. Prior to submitting a Bid for providing materials and labor to construct the Project the General Contractor shall visit the Project Site to familiarize himself with the existing conditions and the nature and scope of the work. The submission of a Bid for Construction shall be understood as evidence that such a site visit has been made and any later claims for labor, equipment, or materials required for difficulties encountered, which could have been foreseen had such an examination been made, will not be recognized. Change Orders shall not be sanctioned as a result of the Contractor's want of knowledge.
12. The General Contractor shall, before commencing the work, review all plans and specifications to ensure they meet with all federal, state and local building codes. Any variations or discrepancies shall be reported immediately to the Architect. The General Contractor shall not proceed with any additional work or changes for which he expects additional compensation beyond the original contract amount without written authorization from the Architect. Failure to obtain such authorization shall invalidate any claim for extra compensation. Any time spent by the Architect in addressing any requests by the Contractor and or the Subcontractors for information, (RFI's), that is already clearly indicated on the drawings shall result in the Architect charging the Contractor for such time spent in providing said information.
13. Where the contract notes or drawings call for any work or a more stringent nature than that required by the Local Building Codes or any other Federal or Local Agency having jurisdiction over the work, the work of the more stringent nature called for by the contract notes or drawings shall be furnished in all cases.
14. The appointed Sub-Contractors shall perform the work all as depicted and specified on the Permitted set of Drawings. The General Contractor shall notify the Architect in the event the existing site conditions preclude the work from being completed all as depicted and specified hereon so that any modifications to the Construction Documents, deemed necessary, can be made. Any deviations from the Permitted set of Drawings will not be acceptable and the Contractor shall reconfigure the work, at his own expense, as required to be in conformance with the Permitted Documents. The Architect shall not accept, certify, or document any work that does not conform to the Permitted Documents for the purpose of obtaining municipal approval required due to unauthorized revisions.
15. The General Contractor shall maintain a current and complete set of Construction Drawings on the Construction Site throughout the duration of the construction for use by all trades.
16. The General Contractor shall fully protect the general building areas and any adjoining property or work from damage during construction and shall replace any damaged work or materials without delay.
17. Any damage by the General Contractor or subcontractors to existing asphalt pavement and or existing landscaping outside of construction limit line shall be fully repaired at no cost to the Owner.
18. During the entire period of construction all required exits and egress pathways shall be continuously maintained free from all obstructions and impediments in the case of fire or other emergency.
19. No materials shall be stored on Public Property unless an Encroachment Permit is first obtained from the Agency having jurisdiction.
20. Manufactures' name, trademark logos, etc., shall not be visible to the public.
21. All floor slab cutting, trenching and removal shall be replaced with the same material in the same thickness of the adjacent floor material. Additional concrete patching shall be doweled into the adjacent concrete slab to minimize differential settlement of the floor system.
22. The intent of these drawings is to indicate to the contractors, subcontractors and Owner the design of the finished space. It is the sole responsibility of the Contractors to construct the scope of work in accordance with all pertinent federal, state and local codes and Owner criteria, including all methods for construction connections of materials and all related procedures. The Contractors are responsible for all matters of Life Safety resulting from all construction and installation of materials.
23. All work noted "By Others" or "N.I.C." is to be accomplished by a Contractor other than the Project's appointed General Contractor and is not to be part of the Construction Agreement. The General Contractor is to coordinate with the "Other" Contractors as required.
24. The Contractor is responsible to complete the Project in the given time frame as agreed by the Architect.
25. Unless otherwise stated the term "Alternate" shall mean a separate pricing break down, prepared by the Contractor, for an item(s) that is not included for in the base price or is an upgrade of a building standard. This alternate item will not be included for without written approval from the Architect.
26. The General Contractor is responsible for providing all construction documents to the sub trades.
27. The General Contractor shall be wholly responsible to establish safe working procedures for the protection of the work crew in all phases of the work and all in accordance with O.S.H.A. Mandates.
28. All materials used throughout this Project shall be the best of their respective kind. All work to be carried out must be done in strict accordance with all Federal, State, and Local statutes and mandates governing such works.
29. The Client, through the Architect and without invalidating the Contract for Construction, may order extra work or make changes by altering, adding or deducting from the work with the Contract Sum being adjusted accordingly. All such work shall be executed under the conditions of the original Contract except that any claim for extension of time caused thereby shall be adjusted at the time of ordering such change. All changes for extra work, deletion of work or modifications of work depicted and described on the Contract Documents shall be permitted only after a written description of the extra work, deletion of work, or modification of work has been submitted in writing to the Architect and has been approved in writing by the Architect.
30. If the General Contractor claims that any revision to the Contract Drawings involve extra cost or time under this Contract, he shall give the Architect written notice thereof within 24 hours after receipt of such instructions. Without such written notification or written approval by the Architect such claims for additional costs and or time shall not be granted.
31. Contractor and all subcontractors shall be currently licensed to perform their respective work within the jurisdiction of the project.
32. Contractor will secure and pay for plan review and the building, mechanical, electrical, and plumbing permits. The Owner shall pay for the health and environmental impact fees due to water and sewer connections, and also zoning regulation fees and permits. Contractor shall organize those fees for Owner. The Contractor shall also secure and pay for all other permits and governmental fees, licenses, and inspections necessary for proper execution of and completion of the Contract, which are legally required when bids are received, or negotiations concluded.
33. Contractor shall provide insurance coverage with bid to Owner. Prior to commencement of work, Contractor shall submit to Owner and Architect Certificate of Insurance indicating coverage types and amounts. All Contractors shall provide all necessary insurance and shall hold harmless the Owner, Architect and agents thereof from any damages resulting from the Contractor's execution of work. Contractor's liability policy shall name Owner and Architect as additional insured.

TYPE OF INSURANCE AND LIMITS (Verify Between Owner and Contractor)

General Liability (occurrence)
General Aggregate
1,500,000.00
Products-comp/ops Aggregate
1,000,000.00
Personal & Advertising Injury
1,000,000.00
Each Occurrence
1,000,000.00
Medical Expenses (any one person)
$100,000.00

Automobile Liability
Combined Single Limit
$500,000.00
Any auto, all owned autos, scheduled autos, hired autos, non-owned autos

Excess Liability
Each Occurrence
$500,000.00
Umbrella Form Aggregate
1,000,000.00

Worker's Compensation & Employers Liability
Statutory Limits
Disease Policy Limit
1,000,000.00

Disease Each Employee
1,000,000.00

Each Accident
$1,000,000.00

Property Insurance/Builders Risk Insurance Will Be Purchased by Owner.

V. SPECIFICATIONS

DIVISION 1 - GENERAL REQUIREMENTS:

01100 – SUMMARY

A. GENERAL:
1. Project Identification – as follows:
a. Project: A Custom Residence to be constructed at 7017 Longboat Drive North, Longboat Key, FL 34228.
2. Contractor's Use of Premises: During construction, Contractor shall have full use of site indicated. Contractor's use of premises is limited only by Owner's right to perform work or employ other contractors on portions of project and as follows:
a. Limit use of site and premises to Owner, Owner's Representative, Contractor and others performing Work under this Contract. Pets on site shall be prohibited.
b. Limit construction operations to areas approved by Owner and as depicted in Contract Documents.
c. Contractor shall maintain construction area and clean site and construction area upon completion of each day's work.
d. Smoking, consumption of alcoholic beverages and illegal drug use on property shall be prohibited.
e. Time restrictions for work shall comply with local ordinances and any applicable homeowner's association by-laws, covenants and restrictions. Contractor shall be responsible for maintaining and repairing (if damaged as a result of construction) all existing roads, trees, tree canopies, utilities and services. This shall include verifying, locating and marking all existing utility and service lines, and repairing adjacent roads damaged during construction.

01200 – PRICE AND PAYMENT PROCEDURES

A. ALLOWANCES: Include cost to Contractor of specific products and materials ordered by Owner under allowance and include taxes, freight, and delivery to Project site. Include installation in base bid unless noted otherwise. Include the following allowances in the Contract Sum.
1. ADDRESS NUMBERS: Allow the sum of $500 for purchase delivery and installation of address plaques.
2. MAILBOX: Allow the sum of $1000 for purchase, delivery and installation of mailbox.
3. METAL GATES AND FENCE: Allow the sum of $5,000 for two metal gates and fences to be shown on the landscape architect's plans at a later date.

B. Contractor shall solicit and receive three written proposals for allowance items, except as otherwise directed by Owner, and shall forward original signed copies in duplicate to Owner for instruction. Contractor shall conclude purchase orders or subcontracts in accordance with instructions and shall furnish copies of purchase orders and receipted bills to Owner. Proposals shall be accompanied by manufacturer's literature or other information as necessary to fully define work. Owner, at his option, may solicit and receive direct proposals for any allowance item, in lieu of those taken by the Contractor or in addition to those taken by Contractor. Unless otherwise specified, allowance shall provide for purchase of materials or equipment plus taxes, handling, and delivery to site. Installation shall be included as part of Contract Sum and not in the allowance except when installation is specified as part of the allowance. Installation included as part of the contract sum shall include all accessories, setting beds, sealers, et cetera in order for a complete installation.

C. Advise Architect /Owner of the date when selection and purchase of each product or system described by an allowance must be completed to avoid delaying the Work.

D. Submit invoices to show cost of products furnished under each allowance. Reconciliation of Allowance amounts with actual costs will be by Change Order.

E. ALTERNATES:
1. An alternate is an amount proposed by bidder for certain work that may be added to or deducted from the Base Bid amount if Owner accepts the alternate. The cost or credit for each alternate is the net addition to or deduction from contract sum to incorporate the alternate into the work. No other adjustments are made to contract.
a. ALTERNATE NUMBER ONE: Provide Gold Bond® SoundBreak® XP® 5/8" Gypsum Board for walls and ceilings in living room, Kitchen and dining area.
b. ALTERNATE NUMBER TWO: Provide Moisture-resistant and mold-resistant gypsum core, 5/8" thick Gold Bond Brand Fire-Shield XP, type X core, for walls and ceilings in lieu of standard 5/8" gypsum board. Support at ceilings shall be at 16" on center, maximum.
c. ALTERNATE NUMBER THREE: Provide 60 Mil mechanically fastened TPO in lieu of 45 Mil mechanically fastened TPO. Provide additional 5 year warranty.

01300 – ADMINISTRATIVE REQUIREMENTS

A. GENERAL:
1. Coordinate construction to ensure efficient and orderly installation of each part of the Work.
2. Submittals:
a. Coordinate each submittal with fabrication, purchasing, testing, delivery, other submittals, and related activities that require sequential activity.
1. No extension of the Contract Time will be authorized because of failure to transmit submittals enough in advance of the Work to permit processing, including re-submittals.
2. Architect will return submittals, without review, received from sources other than Contractor or missing Contractors "Completed Review" stamp.

B. PRODUCTS:
1. SUBMITTALS:
a. Shop Drawings: Prepare Project-specific information, drawn accurately to scale. Do not base Shop Drawings on reproductions of the Contract Documents or standard printed data. Use of Architect's drawings is unacceptable without prior authorization from Architect. It will be the responsibility of user to confirm/verify accuracy of all information on drawings being used and actual field conditions.
b. Identify deviations from the Contract Documents on submittals, in bold or by attached documentation clearly identifying change and reason for change.
c. Samples and finishes shall be submitted with submittals for Architect, Owner and Interior Designer review/approval. Finishes and samples, if previously selected, shall be for review and verification. Finishes, if not previously selected shall provide for complete range of finishes available. Refer also to individual specification sections for requirement of custom finishes. Samples, if not previously selected, shall be provided with clarifications of options and costs.
d. Four (4) copies of all shop drawings shall be submitted. Drawings submitted without approval stamp of Contractor will be returned without action. Architect shall have 10 days to review the submittal.
e. Samples shall include complete samples for each: Owner, Contractor, job site, and Architect, minimum.
f. The Architect's review of all submittals and or shop drawings shall be limited to two, (2), reviews. Any additional reviews by the Architect shall cause the Architect to charge the Contractor for time spent in carrying out any additional reviews.

2. CONTRACTOR'S CONSTRUCTION SCHEDULE:
a. Gantt-Chart Schedule: Submit a comprehensive, fully developed, horizontal Gantt-chart-type schedule within 30 days of date established for the Notice to Proceed to Owner, Architect, and Interior Designer.
b. Preparation: Indicate each significant construction activity separately. Identify first workday of each week with a continuous vertical line.

C. EXECUTION:
1. Submittal Review:
a. Review each submittal and check for completeness and coordination with other Work of the Contract and for compliance with the Contract Documents. Note corrections and field dimensions. Mark with shop drawing review stamp before submitting the Architect. (If approved).
b. Copies of approved samples and finishes shall be maintained on site. With Architect /Owner approval, approved samples (i.e. handrail sample) may be incorporated into project.
2. Contractor's Construction Schedule:
a. Distribute copies of approved schedule to Owner, Architect, subcontractors, testing and inspecting agencies, and parties identified by Contractor with a need-to-know schedule responsibility. When owner approved revisions are made, distribute updated schedules to the same parties.

01400 – QUALITY REQUIREMENTS

A. GENERAL:
1. Quality-control services include inspections, tests, and related actions including reports. Quality-control services are further specified in other Sections of these Specifications and shall be performed by Independent testing agencies provided by Contractor or Owner, as specified.
2. Contractor is responsible for scheduling inspections and tests.
3. Retesting: Contractor shall pay for retesting where results of inspections and tests prove unsatisfactory and indicate noncompliance with requirements.
4. Auxiliary Services: Cooperate with agencies performing inspections and tests. Provide auxiliary services as requested. Notify agency in advance of operations requiring tests or inspections, to permit assignment of personnel. Auxiliary services include the following:
a. Access to the Work.
b. Incidental labor and facilities to assist inspections and tests.
c. Adequate quantities of materials that require testing, and assisting in taking samples.
d. Facilities for storage and curing of test samples.
e. Security and protection of samples and test equipment.
5. Duties of Testing Agencies: Testing agency shall cooperate with Architect and Contractor in performing its duties. Agency shall provide qualified personnel to perform inspections and tests.
a. Agency shall promptly notify Architect and Contractor of irregularities or deficiencies observed in the Work during performance of its services.
b. Agency shall not release, revoke, alter, or enlarge requirements of the Contract Documents or approve or accept any portion of the Work.
c. Agency shall not perform duties of Contractor.
6. Submittals: Testing agency shall submit a certified written report of each inspection and test to the following:
a. Owner.
b. Architect.
c. Contractor.
d. Structural engineer.
e. MPE engineer.
f. Authorities having jurisdiction, when authorities so direct.
7. Report Data: Reports of each inspection, test, or similar service shall include at least the following:
a. Name, address, and telephone number of testing agency.
b. Project title and testing agency's project number.
c. Designation (number) and date of report.
d. Dates and locations where samples were taken or inspections and field tests made.
e. Names of individuals taking the sample or making the inspection or test.
f. Designation of the product and test method.
g. Complete inspection or test data including an interpretation of test results.
h. Ambient conditions at the time of sample taking and testing.
i. Comments or professional opinion on whether inspected or tested Work complies with requirements.
j. Recommendations on retesting or re-inspection.
k. Name and signature of laboratory inspector.
8. Testing Agency Qualifications: Engage inspection and testing agencies that are pre-qualified as complying with the American Council of Independent Laboratories' "Quality Assurance Manual" and that specialize in the types of inspections and tests to be performed.
a. Each testing agency shall be authorized by authorities having jurisdiction to operate in the state where Project is located.

01500 – TEMPORARY FACILITIES AND CONTROLS

A. GENERAL:
1. Provide temporary utility services to Project Site for use during construction.
2. Provide temporary heat and cooling for curing or drying of work and protection of construction from adverse effects of extreme temperatures and weather. Use of permanent heat and cooling system prior to substantial completion is prohibited. Heating and cooling warranties shall commence at substantial completion.
3. Provide field offices, storage trailers, and other support facilities as necessary for efficient prosecution of the Work.
4. Provide temporary sanitary facilities.
5. Collect construction waste daily and, when containers are full, legally dispose of waste off-site. Construction waste shall be separated and recycled as much as possible. All debris shall be removed from the Project Site on a daily basis. Work areas shall be left in a clean and clutter free condition.
6. Provide temporary barricades, warning signs, and lights to protect construction personnel, and others on site, from construction hazards.
7. Provide temporary lighting that provides adequate illumination for construction operations, observations, and inspections.
8. Remove temporary facilities and controls before Substantial Completion.
9. Provide temporary fire protection until permanent systems are fully operational.
a. Provide adequate numbers of fire extinguishers.
b. Store combustible materials in fire safe containers or fire safe locations.
10. Prohibit smoking in structure.

01600 – PRODUCT REQUIREMENTS

A. GENERAL:
1. Provide products of same kind from a single source. The term "product" includes the terms "material", "equipment", "system", and similar terms.
2. Provide products complete with accessories, trim, finish, and other devices and components needed for a complete installation and the intended use and effect. Products shall be new and undamaged at time of installation.
3. Unless otherwise indicated, Owner, through Interior Designer, will select color, pattern, and texture of each product from manufacturer's full range of options.
4. Deliver, store, and handle products using means and methods that will prevent damage, deterioration, and loss, including theft. Comply with manufacturer's written instructions.
a. Deliver products to Project site in manufacturer's original sealed container or packaging, complete with labels and instructions for handling, storing, unpacking, protecting, and installing.
b. Inspect products on delivery to ensure compliance with the Contract Documents and to ensure that products are undamaged and properly protected.
c. Store materials in a manner that will not endanger Project structure.
d. Store products that are subject to damage by the elements, under cover in a weather tight enclosure above ground, with ventilation adequate to prevent condensation.
5. Warranties specified in other Sections shall be in addition to, and run concurrent with, other warranties required by the Contract Documents. Manufacturer's disclaimers and limitations on product warranties do not relieve Contractor of obligations under requirements of the Contract Documents.
6. Contractor and subcontractors shall warrant the Work, and their workmanship, products, components, etc., for a minimum of one year from the date established as the date of Substantial Completion.

01701 – EXECUTION REQUIREMENTS

A. GENERAL:
1. CLOSEOUT:
a. Maintain two sets of Contract Drawings and Specifications as Record Drawings. Mark thereon to show installation that varies from the Work originally shown. Maintain accurate records, (red line drawings and specifications), indicating approved variations to the Contract Documents. Retain all such records and hand over to the Architect upon substantial completion to enable the Architect to prepare and publish "As Built" documents.
b. Organize operation and maintenance data into three-ring binders, with pocket folders. Include emergency instructions, copies of warranties, wiring diagrams, shop drawings, and product data.

8. EXECUTION:
1. EXAMINATION AND PREPARATION
a. Examine substrates and conditions for compliance with manufacturer's written requirements including, but not limited to, substrates, that are sound, level, and plumb; substrates within installation tolerances; surfaces that are smooth, clean, and free of deleterious substances; and application conditions within environmental limits. Proceed with installation only after unsatisfactory conditions have been corrected.
b. Prepare substrates and adjoining surfaces according to manufacturer's written instructions, including, but not limited to, filler and primer application.
c. Where Drawings indicate dimensions of existing construction, verify by field measurement. Where fabricated products are to be fitted to other construction, verify dimensions by field measurement before fabricating and, when possible, allow for fitting and trimming during installation.
2. CUTTING AND PATCHING
a. Do not cut structural members without prior written approval of Architect /Structural Engineer.
b. For patching, provide materials whose installed performance will equal or surpass that of existing materials. For exposed surfaces, provide or finish materials to visually match existing adjacent surfaces. If patch does not match, it will be Contractor's responsibility to provide documentation he has complied with industry standards, which Owner will review and accept, or Contractor will replace.
3. INSTALLATION
a. Comply with manufacturer's written instructions for installation. Anchor each product securely in place, accurately located and aligned. Clean exposed surfaces and protect from damage. If applicable, prepare surfaces for field finishing.
b. Comply with NFPA 70 for installation of electrically operated equipment and electrical components and materials.
4. FINAL CLEANING
a. Clean each surface or item as follows before requesting inspection for certification of Substantial Completion:
1. Remove labels that are not permanent.
2. Clean transparent materials, including mirrors. Remove excess glazing compounds. Replace chipped or broken glass, and glazing with distortion.
3. Clean exposed finishes to a dust-free condition, free of stains, films, or foreign substances. Leave concrete floors broom clean.
4. Vacuum carpeted surfaces and wax resilient flooring.
5. Wipe surfaces of mechanical and electrical equipment. Remove excess lubrication, Clean plumbing fixtures. Clean light fixtures and re-lamp with specified bulbs.
6. Clean the site. Sweep paved areas; remove stains, spills, and foreign deposits. Rake grounds to a smooth, even-textured surface.
5. CLOSEOUT PROCEDURES
a. Request Substantial Completion inspection once the following are complete:
1. Advise Owner of pending insurance changeover requirements.
2. Submit to the Architect and Owner Record Drawings and Specifications, maintenance manuals, warranties, and similar record information.
3. Deliver spare parts, extra materials, and similar items.
4. Change over locks and transmit keys to Owner.
5. Complete startup testing of systems and instruction of operation and maintenance personnel.
6. Remove temporary facilities and controls.
7. Complete final cleanup.
8. Touch up, repair, and restore marred, exposed finishes.
9. Obtain final inspections from authorities having jurisdiction.
10. Obtain Certificate of Occupancy.
b. On receipt of a request for inspection, Architect will proceed with inspection or advise Contractor of unfilled requirements. Architect will prepare the Certificate of Substantial Completion after inspection or advise Contractor of items that must be completed or corrected before the certificate will be issued.
c. Arrange for each installer of equipment that requires operation and maintenance to provide instruction to Owner's personnel, include a detailed review of the following:
1. Startup and shutdown.
2. Emergency operations and safety procedures.
3. Noise and vibration adjustments.
4. Maintenance manuals.
5. Spare parts, tools, and materials.
6. Lubricants and fuels.
7. Identification systems.
8. Control sequences.
9. Hazards.
10. Warranties and bonds.
d. Request inspection for certification of final acceptance, once the following are complete:
1. Submit a copy of the Substantial Completion inspection list stating that each item has been completed or otherwise resolved for acceptance.
2. Submit final meter readings for utilities, a record of stored fuel, and similar data as of the date of Substantial Completion.
e. Architect will re-inspect the Work on receipt of notice that the Work has been completed.
1. On completion of re-inspection, Architect will confirm with Owner that Work has been completed. If the Work is incomplete, Architect will advise Contractor of the Work that is incomplete or obligations that have not yet been fulfilled.

DIVISION 2 - SITE WORK

02230 – SITE CLEARING

A. GENERAL:
1. Refer to Subsurface Soil Exploration and Geotechnical Engineering Evaluation: 551 Broadway Street, Longboat Key, FL 34228 which includes the parcel for this project included within bid package. Soils analysis and recommendations shall govern over this specification if different.
2. Protect and maintain benchmarks and survey control points from disturbance.
3. Install erosion and sedimentation silt fence control measures around the full perimeter of the Project Site before site clearing.
4. Protect site improvements to remain from damage. Restore damaged improvements to condition existing before start of site clearing.
5. Locate and clearly flag trees and vegetation to remain or to be relocated.
6. Refer to Tree disposition plan by the Landscape Designer. Protect remaining trees and shrubs from damage and maintain vegetation. Employ a licensed landscape installer to repair tree and shrub damage. Restore damaged vegetation. Replace damaged trees that cannot be restored to full growth, as determined by Landscape Designer.
7. Do not store materials or equipment or permit excavation within drip line of remaining trees.
8. Locate, identify, disconnect, and seal or cap off utilities indicated to be removed.

B. EXECUTION:
1. Strip topsoil. Stockpile topsoil that will be reused in the Work.
2. Remove obstructions, trees, shrubs, grass, and other vegetation to permit installation of new construction. Removal includes digging out stumps and obstructions and grubbing roots.
3. Remove existing above- and below-grade improvements as indicated and as necessary to facilitate new construction.
4. Remove slabs, paving, curbs, gutters, and aggregate base as indicated. Neatly saw cut length of existing pavement to remain before removing existing pavement.
5. In areas not to be further excavated, fill depressions resulting from site clearing. Place and compact satisfactory soil materials in 6-inch thick layers to density of surrounding original ground.
6. Dispose of waste materials, including trash and debris, off Owner's property. Burning waste materials on-site is not permitted.
7. Separate recyclable materials produced during site clearing from other non-recyclable material. Store or stockpile without intermixing with other materials and transport them to recycling facilities.

02300 – EARTHWORK

A. GENERAL:
1. Unauthorized excavation consists of removing materials beyond indicated sub-grade elevations or dimensions without direction by Architect. Unauthorized excavation and remedial work shall be at Contractor's expense.
2. Do not interrupt existing utilities serving facilities occupied by Owner or others. Provide temporary utility services.

B. PRODUCTS:
1. Satisfactory Soil: ASTM D 2487 Soil Classification Groups GW, GP, GM, SW, SP, and SM; free of rock or gravel larger than 2-inches in any dimension, debris, waste, Vegetation, or other deleterious matter.
2. Unsatisfactory Soil: ASTM D 2487 Soil Classification Groups GC, SC, ML, MH, CL, CH, OL, OH, and PT.
3. Backfill and Fill: Satisfactory soil materials from an approved radon free source.
4. Sub-base: Naturally or artificially graded mixture of natural or crushed gravel, crushed stone, and natural or crushed sand, ASTM D 2940, with at least 95 percent passing a 1-1/2-inch sieve and not more than 8 percent passing a No. 200 sieve.
5. Bedding: Sub-base materials with 100 percent passing a 1-inch sieve and not more than 8 percent passing a No. 200 sieve.
6. Drainage Fill: Washed, evenly graded mixture of crushed stone, or crushed or uncrushed gravel, ASTM D 448, Size 57, with 100 percent passing a 1-1/2-inch sieve and not more than 5 percent passing a No. 8 sieve.

C. EXECUTION:
1. Protect sub-grades and foundation soils from softening and damage by water.
2. Excavate to sub-grade elevations regardless of character of materials and obstructions encountered.
3. Excavate for structures, building slabs, pavements, and walkways. Trim sub-grades to required lines and grades.
4. Utility Trenches: Excavate trenches to indicated slopes, lines, depths, and invert elevations. Maintain 12-inches of working clearance on each side of pipe or conduit.
a. Place, compact, and shape bedding course to provide continuous support for pipes and conduits over rock and other unyielding bearing surfaces and to fill unauthorized excavations.

leader DESIGNSTUDIO
Leader Design Studio, LLC
FL-AR98232

1003 North Orange Ave., Suite A2
Sarasota, Florida 34326
O: (941) 404-8055

GENERAL CONTRACTOR
The Vision Group, LLC
1900 Main Street Suite 205
Sarasota, Florida 34228
O: (941) 357-4040

STRUCTURAL ENGINEER
Apex Consulting Engineers
4315 53rd Avenue East
Bradenton, Florida 34203
O: (941) 365-1900

ENERGY & SUSTAINABILITY CONSULTANTS
ESC, LLC
1348 Fruitville Road
Sarasota, Florida 34236
O: (941) 957-1100

INTERIOR DESIGNER
SAWA Design Studio
1003 North Orange Ave., Suite A2
Sarasota, Florida 34236
O: (941) 564-9291

MAJHER RESIDENCE

7017 Longboat Drive North
Longboat Key, 34228

Project number	LDS-2203
Date	04.27.2023
Drawn by	DM
Checked by	CL
Phase	PERMIT SET

SEAL

STATE OF FLORIDA · STEPHEN H. LEADER · AR98232 · REGISTERED ARCHITECT

"To the best of the Architect's or Engineer's knowledge, the plans and specifications comply with the applicable minimum building codes and applicable fire safety standards as determined by local authority in accordance with Chapter 553 and 663 of Florida Statutes."

Christopher Leader
AR 98232

REVISION

No.	Description	Date

BLDG PERMIT PLANS
FILE
Copy of Record

SHEET
SPECIFICATIONS

RECEIVED
SEP 14 2023
TOWN OF LONGBOAT KEY
Planning, Zoning & Building

A0.1

b. Place and compact initial backfill of satisfactory soil material or sub-base material, free of particles larger than 1-inch, to a height of 12-inches over the utility pipe or conduit. Place and compact final backfill of satisfactory soil material to final sub-grade.

5. When sub-grade or existing ground surfaces to receive fill has a density less than that required for fill, break up ground surface, pulverize, moisture-condition or aerate soil, and re-compact.
6. Place backfill and fill in layers not more than 8-inches in loose depth at optimum moisture content. Compact each layer under structures, building slabs, pavements, and walkways to 98 percent of maximum dry unit weight according to ASTM D 698; elsewhere to 90 percent.
7. Grade areas to a smooth surface to cross sections, lines, and elevations indicated. Grade lawns, walkways, and unpaved sub-grades to tolerances of plus or minus 1-1/4-inch and pavements and areas within building lines to plus or minus 1/2- inch.
8. Under pavements and walkways, place sub-base course material on prepared sub-grades and compact at optimum moisture content to required grades, lines, cross sections, and thicknesses.
9. Under slabs-on-grade, place drainage fill on prepared sub-grade and compact to required cross-section and thickness.
10. Allow testing agency to inspect and test each sub-grade and each fill or backfill layer and verify compliance with requirements.
11. Remove surplus satisfactory soil and waste material, including unsatisfactory soil, trash, and debris, and legally dispose of it off Owner's property.
12. Finished grade at all sides of a building is sloped to provide a minimum of 6 inches (150 mm) of fall within 10 feet (3048 mm) of the edge of the building. Where lot lines, walls, slopes, or other physical barriers prohibit 6 inches (152 mm) of fall within 10 feet (3048 mm), the final grade is sloped away from the edge of the building at a minimum slope of 2 percent

02361 – TERMITE CONTROL

A. GENERAL:
1. Engage a licensed professional pest control operator to apply termite control solution.
2. Condensate and roof downspouts shall discharge at least 1'-0" away from building side walls.
3. Irrigation/ sprinkler system including all risers and spray heads shall not be installed within 1'-0" of the building side walls.
4. Boxed areas in concrete floors for subsequent installation of traps, etc. shall be made with permanent metal or plastic forms. Permanent forms must be of a size and depth that will eliminate the disturbance allowed for the initial treatment.
5. All buildings are required to have pre-construction treatment.
6. No wood, vegetation, stumps, cardboard, trash, etc., shall be buried within 15'-0" of any building or proposed building.

B. PRODUCTS:
1. Provide an EPA-registered termiticide, insecticide, and fungicide, complying with requirements of authorities having jurisdiction, in a soluble or emulsible, concentrated formulation that dilutes with water or foaming agent. Use only soil treatment solutions that are not harmful to plants. Provide quantity required for application at the label volume and rate for the maximum termiticide concentration allowed for each specific use, according to the product's EPA-Registered Label.
2. Wood Treatment with Borate: Provide an EPA-registered borate complying with requirements of authorities having jurisdiction.
   a. Basis of Requirement: BORA-CARE by Nisus Corp., 1-800-264-0870; www.nisuscorp.com
3. Provide TAEXX "in wall" polyethylene tube system.
4. Warranty: Comply with and provide manufacturers limited warranty.

C. EXECUTION:
1. To provide for inspection for termite infestation, between wall covering and final earth grade shall not be less than 6 inches. Exception: paint or decorative cementitious finishes less than 5/8" thick adhered directly to the foundation wall. Initial treatment shall be done after all excavation and backfill is complete.
2. Prepare surfaces and apply treatment at rates and concentrations recommended in manufacturer's written instructions.
3. Minimum 10 mil vapor retarder must be installed to protect against rainfall dilution. If rainfall occurs before vapor retarder placement, retreatment is required.
4. Concrete over pour and mortar along the foundation perimeter must be removed before exterior soil treatment.
5. Soil treatment must be applied under all exterior concrete or grade within 1'-0" of the structure sidewalls.
6. An exterior vertical chemical barrier must be installed after construction is complete including landscaping and irrigation. Any soil disturbed after the vertical barrier is applied, shall be retreated.
7. After all work is completed, loose wood and fill must be removed from below and within 1'-0" of the building. This includes all grade stakes, tub trap boxes, forms, shoring or other cellulose containing material.
8. A certificate of compliance must be issued to the building department by a licensed pest control company before a certificate of occupancy will be issued. The certificate of compliance shall state: 'The building has received a complete treatment for the prevention of subterranean termites. The treatment is in accordance with the rules and laws of the Florida department of agriculture and consumer services".
9. Apply termite control to the following:
   a. At foundations exposed to vertical access from soil.
   b. Concrete surfaces at expansion and control joints.
   c. At hollow masonry/soil location/perimeter.
   d. At slab penetrations.
   e. At crawl spaces: Treat soil under and adjacent to foundations. Treat adjacent areas including around entrance platform, porches, and equipment pads. Treat CMU and concrete crawl space walls.
10. Post warning signs in areas of application. A permanent sign which identifies the termite treatment provider and need for re-inspection and treatment contract renewal shall be provided. The sign shall be posted near the water heater or electric panel.
11. Soil disturbed after the initial treatment shall be retreated including spaces boxed or formed.
12. Wood Treatment Application: Provide quantity of borate solution required for application at the label volume and rate for the maximum specified concentration of borate, according to manufacturer's EPA-Registered Label, so that wood framing, sheathing, siding, and structural members subject to infestation receive treatment.

02510 – WATER DISTRIBUTION

A. GENERAL:
1. This section includes water distribution piping outside the building for water service.
2. Comply with NSF 14 for plastic potable water service piping.
3. Comply with NSF 61 for materials for water service piping and specialties for domestic water.

B. PRODUCTS:
1. Soft Copper Tube: ASTM B88, Type K (ASTM B 88M, Type A) water tube, annealed temper.
   a. Copper Fittings: ASME B16.22; wrought-copper, solder-joint pressure, type.
   b. Brazing Filler Metals: AWS A5.8, BCuP Series.
   c. Solder Filler Metals: ASTM B 32, lead-free type with 0.20 percent maximum lead content.
2. PVC Plastic Pipe: ASTM D 1785, Schedule 40 and Schedule 80.
   a. PVC Socket Fittings: Schedule 40 and Schedule 80.
   b. Solvent Cement for Joining PVC Piping: ASTM D 2564. Include primer according to ASTM F 656.
3. Backflow Prevention Devices: ASSE standard backflow preventers, bronze body, 150-psig (1035-kPa) working pressure, size for maximum flow rate and minimum pressure loss.
4. Plastic Underground Warning Tapes: Polyethylene plastic tape, 6 inches (150 mm) wide by 4 mils (0.1 mm) thick, solid blue in color with metallic core and continuously printed black letter caption "CAUTION – WATER LINE BURIED BELOW."

C. EXECUTION:
1. Water Main Connection: Arrange with utility company for tap size and location in water main, water service to water meter, and water meter.
2. Use restrained-joint pipe and fittings, thrust blocks, anchors, tie rods and clamps, and other supports at vertical and horizontal offsets.
3. Install fittings for changes in direction and branch connections.
4. Install copper tube and fittings according to CDA's "Copper Tube Handbook."
5. Install PVC, AWWA pipe according to AWWA M23 and ASTM F 645.
6. Install continuous underground detectable warning tape during backfilling of trench for underground water service piping. Locate below finish grade, directly over piping where piping is near or crossing other services.
7. Clean and disinfect water distribution piping according to authorities having jurisdiction.

DIVISION 3- CONCRETE (Refer also to structural drawings)

03300 - CAST-IN-PLACE CONCRETE

A. PRODUCTS:
1. Water Vapor Barrier/Retarder: 10-mil-(0.25-mm) thick, minimum, reinforced polyethylene sheet, or polyolefin sheet, ASTM E 1745, Class A, W/TR of 0.006 gr/ft²/hr or less as tested by ASTM E 96.
2. Manufacturer: Stego or approved substitution.

B. EXECUTION:
1. Schedule:
   a. Provide approved vapor retarder on prepared sub-grade with joints lapped 6-inches and manufacturer approved taped seams.
   b. Exterior concrete slabs: to receive micro etch finish on all hardscape located within the front exterior of the residence.

03371 – SHOTCRETE (Refer also to structural drawings)

A. GENERAL:
1. Summary: This Section includes shotcrete applied by either the wet- or dry-mix process.
2. Comply with provisions of ACI 301, "Specification for Structural Concrete," and ACI 506.2, "Specification for Materials, Proportioning, and Application of Shotcrete."
3. Refer to Section 13010 for associated work/equipment.

B. PRODUCTS:
1. Proportion shotcrete mixes to provide a 28-day compressive strength of 4000 psi, minimum.
2. Reinforcing Bars: ASTM A 615/A 615M, Grade 60 deformed. Reinforcing bars shall be #3 at 6-inch on center, minimum, tied every other crossing.
3. Supports: Bolsters, chairs, spacers, ties and other devises for spacing, supporting, and fastening reinforcing steel in place according to CRSI's "Manual of Standard Practice".
4. Interior corner radiuses shall be 6-inch typical.

C. EXECUTION:
1. Apply shotcrete according to ACI 506.2 without exceeding installation tolerances permitted by ACI 117R, increased by a factor of 2.
2. Finish: Rough-textured broom. (Verify with finish system).
3. Remove and replace shotcrete that does not meet ACI 506.2, Grade 3, core quality.

DIVISION 4 – MASONRY (Refer to structural drawings)

04810 – UNIT MASONRY ASSEMBLIES (Refer to structural drawings)

A. GENERAL: Tops of walls shall be protected at end of each day's work and during inclement weather during the day, to minimize water intrusion into wall system due to inclement weather.

DIVISION 5 – METALS (Refer also to structural drawings)

05520 – METAL GATES

A. GENERAL:
1. Refer to the Architectural Drawings and Allowances (as applicable).
2. Submittals: Shop drawings and manufacturer's color charts showing the full range of regular and custom colors available for factory applied finishes. Include all components in submittal.
3. Samples: Provide full size, finished sample. If sample is approved it may be incorporated into project (if fabricated for specific location).

B. PRODUCTS:
1. Aluminum, Extruded Bar and Tube: ASTM B 221, alloy 6063-T5/T52.
2. Aluminum Castings: ASTM B 26, alloy A356-t6.
3. Brackets, Flanges, and Anchors: Formed metal of same type of material and finish as supported rails, unless otherwise indicated.
4. Non-shrink, Nonmetallic Grout: ASTM C 1107; recommended by manufacturer for exterior applications.
5. Fabrication:
   a. Assemble gate systems in shop to the greatest extent possible. Use connections that maintain structural value of joined pieces.
   b. Fabricate gate systems for connecting members by welding and with concealed mechanical fasteners and fittings per specific conditions. All weld joints are to be finished smooth. Rippled joints will be rejected.
   c. Provide approved wall brackets, flanges, miscellaneous fittings, and anchors to connect handrail and railing members to other construction. Finish to match railing components.

C. EXECUTION:
1. Fit exposed connections accurately together to form tight, hairline joints.
2. Set gate accurately in location, alignment, and elevation and free of rack.
3. Provide industrial grade powder coat finish in custom color selected by Architect.
4. Schedule:
   a. Exterior gates

DIVISION 6 – WOOD AND PLASTIC (Refer also to structural drawings)

06100 – ROUGH CARPENTRY

A. GENERAL:
1. Comply with ALSC, ANSI A135.4, AWPA, and NPFA Standards.
2. All wood blocking shall be fire retardant treated in accordance with all applicable codes. The Contractor shall schedule and coordinate the location and installation of all wood blocking and electrical connections prior to the installation of the drywall and millwork.
3. Structural panel used for floor, wall, and/or roof sheathing is compliant with DOC PS 1 and/or DOC PS 2. OSB used for floor, wall, and/or roof sheathing is compliant with DOC PS 2. The panels are made with moisture-resistant adhesives. The trademark indicates these adhesives as follows: Exposure 1 or Exterior for plywood and Exposure 1 for OSB.

B. PRODUCTS:
1. Dimension lumber, S4S, 19 percent maximum moisture content for 2-inch thickness or less, marked with grade stamp of inspection agency.
2. Preservative-Treated Materials: Refer also to structural drawings. Treat indicated items and the following:
   a. Wood members in connection with roofing, flashing, vapor barriers, and waterproofing.
   b. Concealed members in contact with masonry or concrete.
   c. Wood framing members less than 18-inches above grade.
   d. Wood floor plates installed over concrete slabs directly in contact with earth.
   e. 1 x 12 pressure treated concealed wood blocking above all window openings; extend 12-inches minimum each side of opening for attachment of window treatments.
   f. Wood framing below FEMA flood plane elevation.
3. Wood blocking:
   a. Concealed wood blocking for toilet accessories, wall cabinets and curtain rods.
   b. Concealed wood blocking at mid-height of studs and interconnections between vertical and horizontal spaces to provide draft stopping.
   c. 1/2-inch sheathing, minimum, and /or 2 by concealed wood blocking in floor-ceiling assemblies with open web wood trusses or dropped ceilings to limit areas to 500 square feet. Draft stopping may run parallel to framing members.
   d. 1/2-inch sheathing, minimum, and /or 2 by concealed wood blocking in wall/ceiling assemblies with openings from walls to ceiling or attic or at dropped soffit areas to provide draft stops.
4. Wood-Structural Panels: Provide plywood complying with DOC PS 1, where plywood is indicated. Refer to Structural Drawings.
5. Engineered wood products with allowable design stresses, as published by manufacturer, that meet or exceed those indicated. Manufacturer's published values shall be demonstrated by comprehensive testing.
   a. Laminated-Veneer Lumber: Manufactured with exterior-type adhesive complying with ASTM D 2559. Allowable design values determined according to ASTM D 5456.
6. Glass-Fiber-Surfaced Gypsum Sheathing Board: ASTM C 79, water-resistant core, surfaced on face and back with glass-fiber mats with alkali-resistant coating.
7. Telephone and Electrical Equipment Backing Panels: Painted, Exposure 1, C-D plugged, fire-retardant treated, not less than 1/2-inch (12.7 mm) thick.
8. Miscellaneous products:
   a. Air-Infiltration Barrier: Polyolefin material complying with ASTM E 1677, Type I, with minimum water-vapor transmission of 10 perms.
   b. Fasteners: Size and type indicated. Where rough carpentry is exposed to weather, in ground contact, or in area of high relative humidity, provide Type 304 stainless steel fasteners.
      1. Bolts: Steel bolts complying with ASTM A 307, Grade A, with ASTM A 563 hex nuts and, where indicated, flat washers.
   c. Metal Framing Anchors: Hot-dip galvanized steel of structural capacity, type, and size indicated.

C. EXECUTION:
1. Fit rough carpentry to other construction; scribe and cope for accurate fit. Correlate location of furring, blocking, and similar supports to allow attachment of other construction.
2. Securely attach rough carpentry work to substrate by anchoring and fastening as indicated, complying with the following and structural specifications and notes on Drawings.
3. Sheathing: Nail to framing.
4. Roof sheathing shall be dried-in and protected following installation of plywood.
5. Set wood bucks in full bed application of waterproofing at exterior openings.

06200 – FINISH CARPENTRY

A. GENERAL:
1. Submittals: Shop Drawings and Samples showing the full range of colors, textures, and patterns available for each type of finish.
2. Quality Standard: Architectural Woodwork Institute's "Architectural Woodwork Quality Standards."
3. Environmental Limitations: Do not deliver or install woodwork until building is enclosed, wet-work is completed, and HVAC system is operating.

B. PRODUCTS:
1. Lumber: DOC PS 20 and grading rules of inspection agencies certified by American Lumber Standards Committee Board of Review.
2. Softwood Plywood: DOC PS 1.
3. Hardwood Plywood: HPVA HP-1.
4. MDF: ANSI A208.2, Grade 130, made with binder containing no urea-formaldehyde resin.
5. Particleboard: ANSI A208.1, Grade M-2 made with binder containing no urea-formaldehyde resin.
6. Solid Surfacing Material: Homogeneous solid sheets of filled plastic resin complying with material and performance requirements of ANSI Z124.3, Type S or Type 6, without a pre-coated finish.
   a. Corian, Silestone or equal.
8. Hardware Standard: Comply with BHMA A156.9 for items indicated by reference to BHMA numbers or referenced to this standard.
9. Complete fabrication of interior woodwork before shipping to Project site to maximum extent possible. Disassemble only as needed for shipping and installing. Where necessary for fitting at Project site, provide for scribing and trimming.
10. Backout or groove backs of flat trim members, kerf backs of other wide, flat members, except for members with ends exposed in finished Work.
11. Install glass to comply with FGMA's "Glazing Manual." For glass in wood frames, secure glass with removable stops.
12. Interior Standing and Running Trim for Transparent Finish: Premium grade, species as noted. Verify with Interior Designer.
13. Interior Standing and Running Trim for Opaque Finish: Premium grade, clear, kiln dried, made from poplar.
14. Wood Cabinets (Casework).
15. Closet and Linen Shelving: 3/4-inch (19 mm) birch veneer plywood with hardwood edges and 1 x 2 clear hardwood shelf cleats at sides and rear, painted finish. Verify with Interior Designer. Include in Base Bid.
16. Clothes Rod: 1-1/2-inch diameter chrome plated steel rods. Include in Base Bid.
17. Shop finishing of interior woodwork.
   a. Finishes: Same grades as items to be finished.
   b. Finish woodwork at the fabrication shop; defer only final touch up until after installation.
      1. Apply one coat of sealer or primer to concealed surfaces of woodwork. Apply two coats to back of paneling.
      2. Apply a vinyl wash coat to woodwork made from closed-grain wood before staining and finishing.
   c. Transparent Finish: AWI Finish System TR-6 catalyzed polyurethane (satin finish).
   d. Opaque Finish: painted.
18. Fasteners for Exterior: Stainless steel or hot-dip galvanized steel.

C. EXECUTION:
1. Condition woodwork to prevailing conditions before installing in accordance with AWI.
2. The General Contractor to coordinate with the Electrical and Millwork Contractors for required electrical and blocking at millwork. Verify with the Architect prior to commencing the work.
3. Install woodwork to comply with AWI Section 1700 for grade specified.
4. Install woodwork level, plumb, true, and straight. Shim as required with concealed shims. Install to a tolerance of 1/8-inch in 96-inches (3 mm in 2400 mm) for level and plumb.
5. Countersink nail heads on exposed carpentry work and fill holes with wood plugs compatible with final finish.
6. Scribe and cut woodwork to fit adjoining work, seal cut surfaces, and repair damaged finish at cuts.
7. Install trim with minimum number of joints possible, using full-length pieces to the greatest extent possible. Cope at returns and miter at corners to produce tight-fitting joints with full-surface contact throughout length of joint. Use scarf joints for end-to-end joints. Stagger joints in adjacent and related members.
   a. Match color and grain pattern across joints.
   b. Install trim after gypsum board joint finishing operations are complete.
   c. Install to tolerance of 1/8-inch in 96-inches (3 mm in 2400 mm) for level and plumb. Install adjoining trim with 1/32-inch (0.8 mm) maximum offset for flush installation and 1/16-inch (1.6 mm) maximum offset for reveal installation.
8. Anchor countertops securely to base units. Seal space between backsplash and wall.
9. Anchor paneling to supports with concealed panel-hanger clips and by blind nailing on back-up strips, spined-connection strips, and similar associated trim and framing.

06415 – STONE COUNTERTOPS (Refer also to ID drawings)

A. GENERAL:
1. Submittals: Shop Drawings.
2. Verify dimension of stone countertops by field measurements and indicate on Shop Drawings.
3. Samples: Selected stone shall be signed by Owner and/or Contractor upon selection. Samples, with proof of signature shall be provided, 12-inch x 12-inch minimum, for verification prior to installation of stone.

B. PRODUCTS:
1. Stone as selected and/or scheduled.
2. Setting Materials:
   a. Water-Cleanable Epoxy Adhesive: ANSI A118.3.
   b. Water-Cleanable Epoxy Grout: ANSI A118.3.
   c. Sealant: Silicone sealant, color match to stone.
   d. Stone Sealer: Colorless, stain-resistant sealer that does not affect color or physical properties of stone surfaces, as recommended by stone producer for application indicated.
3. Countertop Fabrication:
   a. Comply with recommendations in MIA's "Dimensional Stone – Design Manual IV".
      1. Thickness: 3/4-inch (20 mm) or 1-1/4-inches (30 mm) as selected / scheduled.
      2. Edge Detail: As scheduled.
   b. Splashes: As scheduled. Refer to ID drawings.
   c. Fabricate molded edges with machines having abrasive shaping wheels made to reverse contour of edge profile. Form corners of molded edges as indicated with outside corners slightly eased.
   d. Seams: Fabricate countertops in sections indicated or fewest number of seams for length for joining in field, with seams 1/6-inch (1.5 mm) in width.
   e. Cutouts and Holes:
      1. Under counter Fixtures: Make cutouts for under counter fixtures in shop using template or pattern furnished by fixture manufacturer. Form cutouts to smooth, even curves.
         i. Edge Detail: Vertical, slightly eased at top and bottom surfaces and projecting 3/16-inch (5 mm) into fixture opening.
         ii. At separate double under-mount fixtures, add second layer of stone material, below countertop, for fixtures to be mounted to.
      2. Counter-Mounted Fixtures: Prepare countertops in shop for field cutting openings for counter mounted fixtures. Mark taps for cutout and drill holes at corner of cutout locations. Make corner holes of largest radius practical.
      3. Fittings: Drill countertops in shop for plumbing fittings, under-counter soap dispensers, and similar items.

C. EXECUTION:
1. Install countertops by adhering to supports or plywood sub-top with water-cleanable epoxy adhesive.
2. Space seams with 1/16-inch (1.5 mm) gap for filling with grout or sealant. Use temporary shims to ensure uniform spacing and use clamps to eliminate lipping.
3. Complete cutouts not finished in shop. Mask areas of countertops adjacent to cutouts while cutting.
4. Install backsplash and end splashes by adhering to wall with water-cleanable epoxy adhesive. Leave 1/6-inch (1.5 mm) gap between countertop and splash for filling with sealant. Use temporary shims to ensure uniform spacing.
5. Grout seams to comply with ANSI A108.10. Tool grout uniformly and smoothly with plastic tool.
6. Apply sealant to gap between countertops and splashes.
7. Clean countertops as work progresses. Remove adhesive, grout, mortar, and sealant smears immediately.
8. Clean stone countertops not less than six days after completion of sealant installation, using clean water and soft rags. Do not use materials or methods that could damage stone.
9. Apply stone sealer to comply with stone producer's and sealer manufacturer's written instructions.

06880- WOOD SIDING / PVC WOOD GRAIN SIDING (Also refer to I.D. drawings)

DIVISION 7 – THERMAL AND MOISTURE PROTECTION:

07120 – WATERPROOFING

A. PRODUCTS:
1. Modified, one-part urethane, 60-mil DFT thick, average. Manufacturer approved for horizontal and vertical applications.
   a. Tremco-Vulkem #450/451.
2. One-part polyurethane sealant, gun grade or trowel. Manufacturer approved for vertical or horizontal applications.
   a. Tremco-Vulkem #921.
   b. Tremco-Vulkem #116, color to be selected.
3. Multiple composite water stop with manufacturer approved primer.
   a. Tremco-Vulkem "Superstop" with Paraprimer.
4. Auxiliary Materials: Primer, sheet flashing, liquid membrane, patching membrane, and liquid mastics recommended by waterproofing manufacturer.

B. EXECUTION:
1. Clean, prepare, and treat substrate. Remove grease, oil, form-release agents, and other contaminants. Provide clean, dust-free, and dry substrate for waterproofing application.
2. Remove fins, ridges, mortar, and other projections and fill honeycomb, aggregate pockets, holes, and other voids. Rout and fill joints and cracks in substrate.
3. Prepare, prime, and treat inside and outside corners, terminations, penetrations, drains, and protrusions.
4. Prime substrate and allow to dry.
5. Install in accordance with TCNA (Tile Council of North America) recommendations.
6. Protect waterproofing from damage and wear during construction. Repair and patch tears, voids and blisters.
7. Schedule:
   a. Tremco-Vulkem #450/451 at concealed face of back-filled CMU walls, with stucco finish on exposed face of CMU, and at outer face of CMU walls where decorative stone veneer is other voids. Rout and fill joints and cracks in substrate located.
   b. Tremco-Vulkem #116 with 25% movement capability at exterior door and window perimeter, between window buck and window flange and between window buck and wall framing
   c. Tremko-Vulkem "Superstop" at structural slab cold joints/keyways at walls/slabs exposed to moisture, and slabs exposed to moisture.
   d. Tremco-Vulkem at shower shelves and seats, with abrasive addition for adherence of setting bed. Verify with manufacturer.

07210 - BUILDING INSULATION

A. GENERAL:
1. Surface-Burning Characteristics: ASTM E 84, flame-spread ratings of 75 or less and smoke-developed ratings of 450 or less.

B. PRODUCTS:
1. Exterior Walls: Corefill 500 as manufactured by Tailored Chemical Products, P.O. Box 4186. Hickory, N.C. 28603, (800) 627-1687.
2. Ceiling/Roof trusses: Open cell Icynene or approved substitution, placed under roof sheathing, continuous; and vertically between terraces and HVAC controlled spaces, minimum R-30 shall be obtained in conjunction with R-value of tapered insulation at roof decks, where applicable. Provide and install prescription ignition barrier.
3. Sound Walls: Mineral-Fiber-Blanket insulation: ASTM C 665, Type I, un-faced with fibers manufactured from glass, formaldehyde free. Fill cavity. All Sound Walls are required to achieve a minimum STC rating of 50
4. Roof Decks: Tapered rigid insulation, refer to drawings for locations.
5. Radiant Barrier at Exterior walls: Fi-Foil VR-Plus Shield High Perm (perforated)

C. EXECUTION:
1. Fill all open cells and voids in hollow concrete masonry walls. The foam insulation shall be pressure injected through a series of 5/8" to 7/8" holes drilled into every vertical column of block cells (every 8' on center) beginning at an approximate height of four (4) feet from finished floor level. Repeat this procedure at an approximate height of ten (10) feet above the first horizontal row of holes (or as needed) until the void is completely filled. Patch holes with mortar and score to resemble existing surface.
2. Install insulation in areas and in thicknesses indicated or required to produce R-values indicated. Cut and fit tightly around obstructions and fill voids with insulation.
3. Icynene Insulation shall be installed to be without voids, and shall only be used above grade (not in contact with soil).

07250 – WEATHER BARRIERS

A. GENERAL:
1. Overview: Weather-resistant membrane for vertical building envelope protection that will maintain air/moisture resistance while maintain moisture-vapor permeability.
2. Storage and Protection: Store weather barrier materials as recommended by system manufacturer.
3. References: Product meets or exceeds the following standards:
   a. ASTM C920, ASTM C1193, ASTM D882, ASTM D1117, ASTM E84, ASTM E96, ASTM E1677 and ASTM E2178.
   b. AATCC – Test Method 127 Water Resistance: Hydrostatic Pressure Test.
   c. TAPPI – Test Method T-410 and Test Method T-460.

B. PRODUCTS:
1. Manufacturer: DuPont Building Innovations (4417 Lancaster Pike Chestnut Run Plaza 721, Wilmington, DE 19805 T: 1-800-448-9835)
2. Weather Barrier Membrane: DuPont Tyvek HomeWrap
3. Seam Tape: DuPont Tyvek Tape (2 or 3 Inch Wide)
4. Flashing: DuPont FlexWrap, DuPont StraightFlash and/or DuPont StraightFlash VF
5. Fasteners: DuPont Tyvek Wrap Caps
6. Sealants: DuPont Weatherization Sealant, Tremco 830, Temco Butyl or approved sealants recommended by weather barrier manufacturer.
7. Adhesives: Liquid Nails LN-109, Polyglaze SM 5700, Denso Butyl Liquid or 3M High Strength 90

C. EXECUTION:
1. Install weather-resistant membrane in accordance with manufacturer's instructions.
2. Protect installed weather-resistant membrane from damage during construction.

07540 – SINGLE PLY ROOFING MEMBRANE

A. GENERAL:
1. Installer shall be certified by GAFB.
2. Prior to scheduled commencement of the roofing installation and associated work, conduct a meeting at the project site with the installer, Architect, owner, GAFB representative and any other persons directly involved with the performance of the work. The installer shall record conference discussions to include decisions and agreements reached (or disagreements), and furnish copies of recorded discussions to each attending party. The main purpose of this meeting is to review foreseeable methods and procedures related to roofing work.
3. Provide an installed roofing membrane and base flashing system that does not permit the passage at water, and will withstand the design pressures calculated in accordance with the most current revision of ASCE 7.
4. Warranties: Provide 25 year WELL ROOF™ Advantage warranty from date of completion. Provide alternate warranties for owner/ Architect review. Provides single source coverage and no monetary limitations where the manufacturer agrees to repair or replace components in the roofing system, which cause a leak due to a failure in materials or workmanship.

B. PRODUCTS:
1. Roofing Membrane: Thermoplastic Polyolefin Single-Ply Roofing Membrane
2. Basis of requirement: GAF TPO mechanically fastened, new construction, insulated, 45 mil smooth roofing system. All components listed in this section shall be provided by a single manufacturer or approved by the primary roofing manufacturer.
3. Auxiliary Materials: Recommended by roofing manufacturer for intended use and as follows:
   a. Base Sheet (secondary means of waterproofing): as recommended by manufacturer.
   b. Rigid insulation board: minimum 0.50 inch thickness
   c. Membrane and flashing materials: A.A smooth type, polyester scrim reinforced thermoplastic polyolefin membrane with a nominal 0.045 inch (45 mil) thickness, for use as a single ply roofing membrane. Meets or exceeds the minimum requirements of ASTM D-6878. UL Listed, FM Approved, Dade County Product Approval, Florida Building Code Approved. White membrane is Energy Star Listed, CRRC Listed and Title 24 Compliant. Each full roll contains approximately 1000 sq.ft. of roofing material, 10' X 100', weighing 256 lbs. Each half sheet roll contains approximately 500 sq.ft. of roofing material, 5' X 100', weighing 142 lbs.

C. EXECUTION:
1. Store all pail goods in their original undamaged containers in a clean, dry location within their specified temperature range. Reference data sheets for product storage requirements.
2. Do not expose materials to moisture in any form before, during or after delivery to the site. Reject delivery of materials that show evidence of contact with moisture.
3. Install and secure cant strips and nailer strips.
4. Install one lapped base-sheet course.
5. Single-Ply Membrane: Install TPO membrane over rigid insulation board.
6. Maintain uniform side and staggered end laps. Bond and seal laps, leaving no voids.
7. Protect roofing and base flashings from damage and wear during remainder of construction period.
8. Manufacturer's representative shall provide a comprehensive final inspection after completion of the roof system. All application errors must be addressed and final punch list completed.

07620 – SHEET METAL FLASHING AND TRIM

D. PRODUCTS:
4. Aluminum Sheet: ASTM B 209 (ASTM B 209M) 3003-h14, minimum thickness of 0.040 inch (1.0 mm)
5. Flashing and Trim:
   d. Fabricate sheet metal flashing and trim to comply with recommendations of SMACNA's "Architectural Sheet Metal Manual" that apply to the design, dimensions, metal, and other characteristics of the item indicated.
   e. Coil coat aluminum with 2-coat fluoropolymer Hylar 5000 or Kynar 500 finish.
   f. Exposed drip edges shall be field painted to match adjacent wall/ fascia color.
6. Accessories:
   a. Asphalt Mastic: SSPC-Paint 12, asbestos free, solvent type.
   b. Roofing Cement: ASTM D 4586, Type I, asbestos free, asphalt based.

E. EXECUTION:
1. Comply with SMACNA's "Architectural Sheet Metal Manual." Allow for thermal expansion: set true to line and level. Install Work with laps, joints, and seams permanently watertight and weatherproof; conceal fasteners where possible.
2. Sealed Joints: Form non-expansion, but movable, joints in metal to accommodate elastomeric sealant to comply with SMACNA standards.
3. Separations: Separate non-compatible metals or corrosive substrates with a coating of asphalt mastic or other permanent separation.
4. Fabricate nonmoving seams in sheet metal with flat-lock seams. For metals other than aluminum, tin edges to be seamed, form seams, and solder.
5. Separations: Separate non-compatible metals or corrosive substrates with a coating of asphalt mastic or other permanent separation.
6. All joints shall be lapped a minimum of 6 inches.

07710 - MANUFACTURED ROOF SPECIALTIES

A. GENERAL:
1. Provide products that comply with applicable requirements of SMACNA's "Architectural Sheet Metal Manual," unless otherwise indicated.
2. Submittals: Shop drawings, samples, and color selections.

B. PRODUCTS:
1. Gutters and Downspouts: 4" box gutters, 4" dia. round downspouts.
   a. Aluminum Finish: High-Performance coating, AAC12C42R12, composed of inhibitive primer and color topcoat containing not less than 70 percent polyvinylidene fluoride resin by weight, with a total minimum dry film thickness of 0.9 mil (0.023 mm); complying with AAMA 1402. Test method 7.
   b. Gutters: 4" box gutter, 0.032 thickness.
   c. Downspouts: 4" dia. Round downspout, 0.032 minimum thickness.
   d. Anchors: Concealed screw at 30" on center. Screws and anchors shall be aluminum.

C. EXECUTION:
1. Coordinate with installation of roof decks and other substrates to produce a watertight assembly capable of withstanding inward and outward loading pressures, and thermal and lateral loads.
2. Expansion Provisions: Install running lengths to allow controlled expansion for movement of metal components, to prevent water leakage, deformation, or damage.
3. Coat back side of aluminum roof specialties with bituminous coating where they will contact wood, ferrous metal, or cementitious construction.

SECTION 07841 - THROUGH-PENETRATION FIRESTOP SYSTEMS

A. GENERAL:
1. Provide fire-stopping systems with fire-resistance ratings indicated by reference to UL designations as listed in its "Fire Resistance Directory," or to designations of another testing agency acceptable to authorities having jurisdiction.
2. For exposed fire-stopping, provide products with flame-spread indexes of less than 25 and smoke-developed indexes of less than 450, as determined according to ASTM E 84.

B. PRODUCTS:
1. Any through-penetration fire-stop system that is classified by UL for the application and with F-rating indicated may be used.

C. EXECUTION:
1. Install fire-stopping systems to comply with requirements listed in testing agency's directory for indicated fire-resistance rating.
2. Schedule:
   a. Install fire stopping at penetrations between main living and garage. Provide 1 hour rating.

07920 - JOINT SEALANTS

A. GENERAL:
1. Submittals: Color Samples for exposed sealant locations.

B. PRODUCTS:
1. Compatibility: Provide joint sealants, joint fillers, and other related materials that are compatible with one another and with joint substrates under service and application conditions.
2. Elastomeric Sealants: Comply with ASTM C 920.

leader DESIGNSTUDIO
Leader Design Studio, LLC
FL-AR98232

1003 North Orange Ave., Suite A2
Sarasota, Florida 34326
O: (941) 404-8055

GENERAL CONTRACTOR
The Vision Group, LLC
1900 Main Street Suite 205
Sarasota, Florida 34228
O: (941) 357-4040

STRUCTURAL ENGINEER
Apex Consulting Engineers
4315 53rd Avenue East
Bradenton, Florida 34203
O: (941) 365-1900

ENERGY & SUSTAINABILITY CONSULTANTS
ESC, LLC
1348 Fruitville Road
Sarasota, Florida 34236
O: (941) 957-1100

INTERIOR DESIGNER
SAWA Design Studio
1003 North Orange Ave., Suite A2
Sarasota, Florida 34236
O: (941) 564-9291

MAJHER RESIDENCE

7017 Longboat Drive North
Longboat Key, 34228

Project number	LDS-2203
Date	04.27.2023
Drawn by	DM
Checked by	CL
Phase	PERMIT SET

SEAL

STATE OF FLORIDA · CHRISTOPHER LEADER · REGISTERED ARCHITECT · AR98232

"To the best of the Architect's or Engineer's knowledge, the plans and specifications comply with the applicable minimum building codes and applicable fire safety standards as determined by local authority in accordance with Chapter 553 and 663 of Florida Statutes."

Christopher Leader
AR 98232

REVISION

No.	Description	Date

BLDG PERMIT PLANS
FILE
Copy of Record

SHEET

SPECIFICATIONS

RECEIVED
SEP 14 2023
TOWN OF LONGBOAT KEY
Planning, Zoning & Building

A0.2

a. Single-component, neutral-curing silicone sealant. Type S: Grade NS: Class 25: Uses T, NT, M, G, A, and O. For general exterior use.
b. Single-component, non-sag urethane sealant. Type S: Grade NS: Class 25; and Uses NT, M, A, and O. For general exterior use.
c. Single-component, mildew-resistant silicone sealant. Type S; Grade NS: Class 25: Uses NT, G, A and O; formulated with fungicide. Use for interior sealant joints in ceramic tile, stone and other hard surfaces in kitchens and toilet rooms and around plumbing fixtures.

3. Latex Sealant: Single-component, non-sag, mildew-resistant, paintable, acrylic-emulsion sealant complying with ASTM C 834. For interior use only at perimeters of door and window frames.
4. Acoustical Sealant for Exposed Joints: Non-sag, paintable, non-staining, latex sealant complying with ASTM C 834. For interior use only at acoustical assemblies.
5. Acoustical Sealant for Concealed Joints: Nondrying, non-hardening, non-skinning, non-staining, gunnable, synthetic-rubber sealant recommended for sealing interior concealed joints to reduce transmission of airborne sound. For interior use only at acoustical assemblies.

C. EXECUTION:
1. Comply with ASTM C 1193.
2. Comply with ASTM C 919 for use of joint sealants in acoustical applications.
3. Building Thermal Envelope. The building thermal envelope is durably sealed to limit infiltration. The sealing methods between dissimilar materials allow for differential expansion and contraction. The following are caulked, gasketed, weather-stripped or otherwise sealed with an air barrier material, suitable film, or solid material:
a. All joints, seams and penetrations
b. Site-built windows, doors, and skylights
c. Openings between window and door assemblies and their respective jambs and framing.
d. Utility penetrations
e. Dropped ceilings or chases adjacent to the thermal envelope.
f. Knee walls.
g. Walls and ceilings separating a garage from conditioned spaces.
h. Behind tubs and showers on exterior walls.
i. Common walls between dwelling units
j. Attic access openings.
k. Rim joist junction
l. Other sources of infiltration.

DIVISION 8 - DOORS AND WINDOWS:

08116 – RETRACTABLE SCREENS

A. GENERAL:
1. Overview: Retractable oversized insect and shade screens; electronically operated, recess mounted.
2. Storage and Protection: Deliver and store materials in manufacturer's original packaging bearing the brand name and manufacturer's identification until ready for installation.
3. Sample Selections: Provide full range of samples for color selection.
4. Sample Verification: Upon color selection, provide full scale mock-up for evaluation as needed.
5. Environmental Conditions: Maintain environmental conditions (temperature, humidity, and ventilation) within limits recommended by manufacturer for optimum results. Do not install products under environmental conditions outside manufacturer's recommended limits.
6. Warranty: Provide manufacturer's limited lifetime material warranty on aluminum components.
a. 5 Year Warranty on Electric Motors and Manually Operated Gears.
b. 5 Year Warranty on Electric Components.
c. Registration: Installation registration form shall be signed by Owner or Owner's representative and returned to manufacturer.

B. PRODUCT:
1. Manufacturer: Phantom Screens, which is located at 30451 Simpson Road, Abbotsford, BC. Canada V2T 6C7; Website: www.phantomscreens.com; Toll Free Tel: 1-604-855-3654.
2. References: Product meets or exceeds the following standards:
a. AAMA 2603
b. ASTM B221, ASTM B429
3. Components:
a. Housing Back, Top, End Caps and Cover: Surface mounted, extruded aluminum. Fabricate surface mounted housings and covers to be the same size. Angle mounting bracket: Recessed, extruded aluminum.
b. Motor: Somfy, Inc.; model as recommended by screen manufacturer based on screen size.
c. Roller Assembly: Extruded aluminum, outside diameter as specified by manufacturer based on screen size.
d. Mounting Angle: Extruded aluminum.
e. Sidetrack and Cover: Recessed, extruded aluminum.
f. Slide Bar: Extruded aluminum.
g. Control System: Provide full range of options for selection.
h. Accessories: Wind Sensor, Sun Sensor, Timer and Rain Sensor.

C. EXECUTION:
1. General:
a. Comply with Retractable Screen manufacturer's printed installation instructions and approved shop drawings.
2. Examination:
a. Do not begin installation until substrates upon which screen components will be installed have been properly prepared.
b. Verify that screen opening complies with manufacturer's requirements for being square, plumb and level.
c. If substrate preparation is the responsibility of another installer, notify Architect of unsatisfactory preparation before proceeding.
3. Preparation:
a. Clean surfaces thoroughly prior to installation.
b. Prepare surfaces using the methods recommended by the manufacturer for achieving the best result for the substrate under the project conditions.
4. Installation:
a. Install roofing accessories per manufacturer's instructions and requirements to provide performance as designed and maintain warranties offered.
b. Install sealant in joints between screen members and adjacent construction.
c. Demonstrate operation to Owner or Owner's representative.
5. Protection:
a. Protect installed products until completion of project.
b. Touch-up, repair or replace damaged products before Substantial Completion.

08212 – STILE AND RAIL DOORS

A. GENERAL:
1. Conform to requirements of AWI Quality Standard Section 1400 Premium Grade and AWI Quality Standards of Architectural Woodwork Institute.
2. Provide 5 year manufacturer's warranty. Cover cost of replacement, labor, materials, and damage to building contents resulting from failure to resist elements.
3. Provide sample of factory-finished doors.
4. Exterior door structural performance: Door system shall meet requirements of FBC and Florida Product Approvals as required by local code authority or be protected by storm shutter system.

B. PRODUCTS:
1. Interior Doors: 1-3/4" thick premium MDF, by Transtile.
a. Flush style.
b. Stiles are to be constructed for improved screw holding by use of solid wood edges. Hardwood stiles to match face veneers.
c. Factory prime interior doors to be painted in color to be selected by ID.

C. EXECUTION:
1. Align and fit doors in frames in accordance with manufacturer's requirements and AWI tolerances, for uniform clearances.
2. Repair, refinish, or replace doors damaged during delivery, installation, or during construction.

08163 – ALUMINUM FRAMED SLIDING GLASS DOORS

A. GENERAL:
1. Performance Requirements: AAMA/NWWDA 101/I.S.2-97. Product Designation SGD HC.
2. Submittals: Product Data, shop drawings, color samples and warranties.
3. Field Measurements: Verify actual measurements/openings by field measurements before fabrication; show recorded measurements on shop drawings. Coordinate field measurements and fabrication schedule with construction progress to avoid construction delays.
4. Door system shall meet requirements of Notice of Acceptance (NOA) or Florida Product Approval as required by local code Authority.
5. Refer to drawings for sizes and pocketing installation, if applicable.
6. Sliding glass doors have an air infiltration rate of no more than 0.3 cfm per square foot (1.5 L/s/m2), and swinging doors no more than 0.5 cfm per square foot (2.6 L/s/m2), when tested in accordance with NFRC 400 or AAMA/WDMA/CSA 101/I.S.2/A440 by an accredited, independent laboratory and listed and labeled. This practice does not apply to site-built windows, skylights, and doors.
7. Warranty Period: Manufacturer's one (1) year standard warranty commencing on the substantial date of completion for the project provided that the warranty.

B. PRODUCTS:
1. Sliding Glass Doors Glass Doors:
a. ES Windows, Inc. ES-SGD2020 Series (FL #22267-R9)
2. Extrusions: ASTM B 221 (ASTM B 221M), 6063-T5 Aluminum Alloy.
3. Retractable Screen: Phantom Screens, refer to plans.
4. Glaze units with low-e coated impact-resistant, sealed insulating, clear laminated Solarban 70XL manufactured by PPG.
5. Color Finish: Kynar painted Duranar Sunstorm Arcadia Silver (UC70123). Match fixed storefront system.
6. Hardware: Confirm levers as selected by Interior Designer.
7. Accessories: Sill risers as required.

C. EXECUTION:
1. Verify location of perimeter fasteners and block-outs are in accordance with shop drawings.
2. Set doors level, plumb and true to line, without warp or rack of frames and panels. Provide proper support and anchor securely in place.
3. Set sill members in bed of sealant or with gaskets, as indicated, to provide weather-tight construction.
4. Protect aluminum members in contact with masonry, steel, concrete, or dissimilar materials using nylon pads or bituminous coating.
5. Shim and brace aluminum system before anchoring to structure.
6. Adjust operating panels, screens, and hardware to provide a tight fit at contact points and weather stripping for smooth operation and weather-tight closure. Lubricate hardware and moving parts.
7. Completed doors must allow water to be wept to the exterior; Verify weep holes are open.
8. Clean aluminum surfaces and glass immediately after installing sliding aluminum-framed glass doors. Remove non-permanent labels from glass surfaces.

08361 – SECTIONAL OVERHEAD DOORS

B. GENERAL:
1. Submittals: Provide sample of door and product data on manufacturer-approved opener.
2. Structural Performance: Door system shall have Notice of Acceptance (NOA) or Florida Product Approval (FPA) as required by local code authority.
3. Each door shall bear a permanent label with the manufacturer's name or logo, city, state, and NOA or FPA approval statement.
4. Provide manufacturers standard warranty.

C. PRODUCTS:
1. Manufacturer: Basis of requirement is Clopay Plush Low-Headroom Garage Door.
2. Framing: Four layer insulated steel and composite construction, 2" thick overhead operation.
3. Spring Counterbalance: Torsion type, low-stress, helical wound, and oil tempered spring wire with minimum life of 15, 000 cycles.
4. Finishing: Provide factory primed, 100% acrylic latex, ready for final painting.
5. Tracks, Supports and Hardware: Provide as required by NOA.
6. Operation: Manufacturer approved Teflon belt driven electric opener. Provide 2 openers and wall mounted numeric keypad next to door.

D. EXECUTION:
1. Install door, track, and operating equipment complete with necessary hardware, jamb and head mold strips, anchors, inserts, hangers and equipment supports.
2. Lubricate bearings and sliding parts, adjust doors to operate easily, free from warp, twist, or distortion, and fitting weather tight for entire perimeter.

08411 – ALUMINUM FRAMED SWING DOORS AND FIXED STOREFRONT

A. GENERAL:
1. Performance Requirements: Architectural terrace doors shall conform to all AAMA/WDMA/CSA/101 I.S.2/A440 requirements for the door type. Architectural Terrace Doors shall meet all requirements of ASTM E 1886, ASTM E 1996, and Florida High Velocity Hurricane Zone Protocols TAS 201, TAS 202, and TAS 203. Provide aluminum storefront systems that meet all requirements of South Florida Building Code Protocols TAS 201, TAS 202, and TAS 203.
2. Submittals: Product Data, shop drawings, color samples and warranties.
3. Field Measurements: Verify actual measurements/openings by field measurements before fabrication; show recorded measurements on shop drawings. Coordinate field measurements and fabrication schedule with construction progress to avoid construction delays.
4. Door system shall meet requirements of Notice of Acceptance (NOA) or Florida Product Approval as required by local code Authority.
5. Refer to drawings for sizes.
6. Thermal Barrier: Provide continuous thermal barrier by means of 6/6 nylon polyamide glass fiber reinforced pressure extruded bars. Systems employing non-structural thermal barriers are not accepted.
7. Windows, skylights and sliding glass doors have an air infiltration rate of no more than 0.3 cfm per square foot (1.5 L/s/m2), and swinging doors no more than 0.5 cfm per square foot (2.6 L/s/m2), when tested in accordance with NFRC 400 or AAMA/WDMA/CSA 101/I.S.2/A440 by an accredited, independent laboratory and listed and labeled. This practice does not apply to site-built windows, skylights, and doors.
8. Warranty Period: Manufacturer's one (1) year standard warranty commencing on the substantial date of completion for the project provided that the warranty.

B. PRODUCTS:
1. Acceptable Manufacturers:
a. ES Windows, Inc.
5220 NW 72nd Avenue Bay #4
Miami, Florida 33166
Telephone: (305) 624-7775 Fax: (305) 624-7777
2. Swinging Glass Doors:
a. ES Windows, Inc. ES-9000 Series (NOA: 22-0407.08)
3. Fixed Storefront Systems:
a. ES Windows, Inc. ES-8000T Series (NOA: 20-1118.02)
4. Extrusions: ASTM B 221 (ASTM B 221M), 6063-T5 and 6063-T6 Aluminum Alloys.
5. Aluminum Sheet: Kynar Finish: ASTM B 209 (ASTM B 209M), 5005-H14 Aluminum Alloy, 0.050" (1.27 mm) minimum thickness.
6. Brake formed aluminum to be supplied by Manufacturer at all structural steel posts.
7. Glaze units with low-e coated impact-resistant, sealed insulating, clear laminated Solarban 70XL manufactured by PPG.
8. Color Finish: Kynar painted Duranar Sunstorm Arcadia Silver (UC70123).
9. Hardware: Confirm levers as selected by Interior Designer.
10. Accessories: Sill risers and flashing as required.

C. EXECUTION:
1. Verify location of perimeter fasteners and block-outs are in accordance with shop drawings.
2. Set doors level, plumb and true to line, without warp or rack of frames and panels. Provide proper support and anchor securely in place.
3. Set sill members in bed of sealant or with gaskets, as indicated, to provide weather-tight construction.
4. Protect aluminum members in contact with masonry, steel, concrete, or dissimilar materials using nylon pads or bituminous coating.
5. Shim and brace aluminum system before anchoring to structure.
6. Verify window system allows water entering system to be collected in gutters and wept to the exterior.
7. Verify weep holes are open, and metal joints are sealed in accordance with manufacturer's installation instructions.
8. Seal metal to metal window system using sealant recommended by system manufacturer.
9. Clean aluminum surfaces and glass immediately after installing sliding aluminum-framed glass doors. Remove non-permanent labels from glass surfaces.

08710 – DOOR HARDWARE (Refer also to ID drawings)

A. GENERAL:
1. Submit schedule, shop drawings and product data. Indicate locations of each type of hardware. Provide 5-year warranty.

B. PRODUCTS:
1. Pocket Door Frame and hardware shall be Series #100 and #111 tracks by L.E. Johnson Products, Inc. with #1125 ball bearing hanger sized for size, thickness and weight of door.
2. Mounting heights are as follows: (finished floor to center line of hardware item):
a. Locksets: 36" (align with rail height).
b. Push/Pulls: 42".
c. Dead Locks: 42".
3. Basis of Requirement for latches, hinges, stops, etc. shall be as scheduled by interior designer.

C. EXECUTION:
1. Install hardware in accordance with manufacturer's instructions. A representative of the hardware supplier, upon completion of the project, shall check all locks for proper location, operation and keying.

08800 - GLAZING

A. GENERAL:
1. Safety glass: category II materials complying with testing requirements in 16 CFR 1201 and ANSI 297.1.

B. PRODUCTS:
1. Float glass: ASTM C 1036, Type I, Class 1 clear, 3/8-inch thick, minimum.
2. Mirror glass type FG-M: ASTM C 1036, Type I transparent flat, Class 1 clear, Quality q1 mirror select, 3/16-inch thick, minimum with polished edge. Sizes to be verified with Interior Designer.
3. Provide glazing compounds and accessories as recommended by manufacturer.

C. EXECUTION:
1. Comply with combined recommendations of manufacturers of glass, sealants, gaskets, and other glazing materials, unless more stringent requirements are contained in GANA's "Glazing Manual".

DIVISION 9 – FINISHES

09220 – PORTLAND CEMENT PLASTER (STUCCO)

A. GENERAL:
1. Submittals: Product data and finish samples.

B. PRODUCTS:
1. Metal furring and lathing: Fabricate vertical wall and furred space framing to limit finish surface to 1/180 deflection under lateral point load of 100 lbs. Fabricate horizontal ceiling and soffit framing to limit finish surface to 1/360 deflection under super imposed dead loads and wind uplift. Perform work in accordance with specifications for metal lathing and furring. Lathing materials, accessories and finishes as follows:
a. Metal lath: ANSI/ASTM C847; and FS QQ-L-101; flat diamond mesh: of weight to suit application.
b. Corner and strip mesh: Minimum 26 gage thick, 2-inches wide.
c. Anchorages: Tie wire, nails, screws and other metal supports, of type and size to suit application, to rigidly secure lathing materials in place.
d. Finish: Lath galvanized or PVC. Casing beads, corner beads, expansion joints-PVC.
e. Paper backing: Asphalt-impregnated paper complying with FS UU-B-790, Type I, Grade D (vapor permeable), Style 2, factory-bonded to back of lath.
2. Accessories: Comply with material provisions of ASTM C 1063 and the requirements indicated below; coordinate depth of accessories with thicknesses and number of plaster coats required.
a. Zinc-alloy components: ASTM B 69, 99 percent pure zinc.
b. Plastic components: ASTM D 4216, high-impact PVC for building products.
c. Bonding agent: ASTM C 932, Type recommended for bonding plaster to concrete and concrete masonry surfaces.
3. Portland cement plaster: Mix, proportion, and apply cement plaster in accordance with ASTM C926 and PCA Plaster (stucco) Manual. Materials shall be in accordance with following:
a. Cement: ASTM C150, Normal - Type I Portland. ANSI/ASTM C91, gray color.
b. Lime: ANSI/ASTM C206, Type S; per plaster manufacturers recommendations.
c. Aggregate: In accordance with ANSI/ASTM C897 and PCA Plaster (stucco) Manual.
d. Water: Clean, fresh, potable and free of mineral or organic matter, which can affect plaster.
4. Bonding Admixture / Water Repellant: Stucco mix shall incorporate bonding admixture/water repellant per manufacturer's printed recommendations.
a. Acceptable manufacturers/products: Euclid – Integral Water Peller.
5. Exterior Walls: Top of walls shall be protected during construction to minimize water intrusion from inclement weather.

C. EXECUTION
1. Metal furring and lathing materials to comply with ASTM C 1063 and MI/SFA 920, "Guide Specification for Metal Lathing and Furring":
a. Comply with ASTM C 754 for installing non-load-bearing stud systems.
b. Comply with ASTM C 1007 for installing load-bearing stud systems.
2. Install supplementary framing, blocking, and bracing at terminations in work and for support of fixtures, equipment services, heavy trim, grab bars, toilet accessories, furnishings, and similar work.
3. Proportion mix, apply, and cure plaster materials and finishes to comply with ASTM C 926. Apply three coats:
a. Scratch Coat: Sand/cement stucco mixed with Integral Water Peller. Apply scratch coat 1/4-inch thick and cross-scratched at concrete or CMU substrate; 3/8-inch thick and cross-scratched at wood with metal lath substrate.
b. Brown Coat: mixed and applied 1/4-inch thick at concrete or CMU substrate; 3/8-inch thick at wood with lath substrate.
c. Finish Coat: 6-9-lbs/sq. yd of plaster mix with Integral Water Peller. Apply finish coat 1/8-inch thick, wood float to a smooth or sand finish. Mix only as much plaster as can be used in one hour. Avoid excessive working of surface. Delay trowelling as long as possible to avoid drawing excess lines to surface. Moist cure finish coat for minimum period of 48 hours. Finish stucco shall cure for 30 days prior to painting.
d. Corner beads, casing, and control joints shall be PVC.
e. Total thickness of stucco: 5/8-inch at CMU/concrete; 7/8-inch at wood with metal lath.
f. Schedule:
i. Smooth Finish-Refer to drawings for locations
ii. Fine Sand Float Finish-Refer to drawings for locations

09250 – GYPSUM BOARD ASSEMBLIES

A. GENERAL:
1. Provide finish samples for approval.

B. PRODUCTS:
2. Gypsum board products in maximum lengths available to minimize end-to-end butt joints.
a. Products above floodplain:
i. 5/8" thick National Gypsum Gold Bond Brand gypsum brand, for walls and ceilings. Support at ceilings shall be at 16" on center, maximum.
3. Trim accessories: Corner bead, edge trim, and control joints complying with ASTM C 1047, formed from steel sheet zinc coated by hot-dip process or rolled zinc or plastic.
4. Gypsum board joint treatment materials: Comply with ASTM C 475. Fiberglass tape and setting-type, joint compounds.
5. Screws: 12" on center maximum. Provide per manufacturer's recommendations.
6. Cementitious backer units: Wonderboard cit tile and stone locations. Comply with ASTM C1178, C1278, C1288, or C1325
7. Cementitious backer unit joint treatment materials: Comply with ASTM C 475.
8. Acoustical sealant for exposed and concealed joints: Non-sag, paintable, non-staining latex sealant. Basis of requirement: Tremco Acoustical.
9. Acoustic attenuation for interior partitions: 49 STC in accordance with ANSI/ASTM E90.

C. EXECUTION:
1. Install gypsum board in accordance with GA 201 and GA 216 and manufacturer's instructions. Erect single layer standard gypsum board in most economical direction, with ends and edges occurring over firm bearing. Use screws when fastening gypsum board to wood furring or framing. Staples may not be used.
2. Gypsum board finish at all walls and ceilings shall be Level 5 finish in accordance with Gypsum Association Document GA-214.
3. All joints and interior angles shall have tape embedded in joint compound and shall be immediately wiped with a joint knife leaving a thin coating of joint compound over all joints and interior angles. Two separate coats of joint compound shall be applied over all flat joints and one separate coat of joint compound shall be applied over interior angles. Fastener heads and accessories shall be covered with three separate coats of joint compound. A thin skim coat of joint compound trowel applied, or a material manufactured especially for this purpose and applied in accordance with manufacturer's recommendations, applied to the entire surface.
4. All joint compounds shall be smooth and free of tool marks and edges. The prepared surface shall be coated with a drywall primer prior to the application of final finishes. All walls and ceilings shall be straight, level and without joints and joint telegraphing.
5. Close off sound-flanking paths around or through gypsum board assemblies.
6. All joints and interior angles shall have tape embedded in joint compound and shall be immediately wiped with a joint knife leaving a thin coating of joint compound over all joints and interior angles. Two separate coats of joint compound shall be applied over all flat joints and one separate coat of joint compound shall be applied over interior angles. Fastener heads and accessories shall be covered with three separate coats of joint compound. A thin skim coat of joint compound trowel applied, or a material manufactured especially for this purpose and applied in accordance with manufacturer's recommendations, applied to the entire surface.

09310 – CERAMIC TILE (Refer also to ID drawings)

A. GENERAL:
1. Conform to TCNA Handbook for Ceramic Tile Installation, ANSI/TCNA A108.3 and ANSI/TCNA A137.1.

B. PRODUCTS: Materials shall conform to the following:
1. Tile: ANSI/TCNA A137.1:
a. Moisture Absorption - 0.5 to 3.0 Maximum
b. Size - To be selected
c. Edge – To be selected
d. Surface Finish – To be selected
e. Color - To be selected
2. Mortar Materials: ANSI/TCNA A118.1 and ANSI/TCNA A118.3; Portland cement, sand, latex additive, and water. Thin set at interior floors. Provide Laticrete additive at installations on concrete slab not on grade.
3. Grout: Cementitious type with latex additive, resistant to shrinking and non-staining.
4. Color Admixture: Pure lime-proof mineral pigment type, color to be selected.
5. Slipwer Pan Liner: Noble Pro-slope and Chloraloy membrane manufactured from Chlorinated Polyethylene (CPE), 0.040-inch (1.0 mm) thick. Water test prior to setting tile.
6. Crack Suppression Membrane: Redgard waterproofing and crack prevention membrane.

C. EXECUTION:
1. Install shower pan liner, mortar bed, tile, threshold, and grout in accordance with manufacturer's instructions and toTCNA Handbook for Ceramic Tile Installation, newest edition. Place thresholds and edge strips at exposed tile edges. Cut and fit tile tight to penetrations through tile. Form cornes neatly. Place tile joints uniform in width, subject to variance in tolerance allowed in tile size. Make joints watertight without voids, cracks, excess mortar, or excess grout.
2. Refer to ID drawings for schedule.

09385 – DIMENSION STONE TILE (Refer also to ID drawings)

A. GENERAL:
1. Conform to TCNA Handbook for Ceramic Tile Installation.

B. PRODUCTS:
1. Materials shall conform to the following:
a. Stone: To be determined.
b. Mortar Materials: ANSI/TCNA A118.1 and ANSI/TCNA A118.3, Portland cement, sand, latex additive and water. Mud set at interior floors, thin set at exterior floors. Provide Laticrete additive at installations on concrete slab not on grade.
c. Grout: Cementitious type with latex additive. Color to match stone.
2. Slab: 3/4-inch with edges as scheduled/detailed exposed to view.
3. Seats: 3/4-inch slab material with edge as scheduled/detailed. Seat shall support 400 pounds of weight.
4. Sealer: Sealer for all stone interior and exterior surfaces and pavers at walks and driveways shall be "Porous Plus" combination of #511 pre-treat and #511 impregnator. Pavers at walks and driveway shall receive one coat while stone surfaces shall receive one coat prior to grouting and one coat after grouting. Install in complete accordance with manufacturers printed instructions.
5. Shower Pan Liner: Noble Pro-Slope and Chloraloy membrane manufactured from Chlorinated Polyethylene (CPE), 0.040-inch (1.0 mm) thick. Water test prior to setting stone.
6. Crack Suppression Membrane: Redgard waterproofing and crack prevention membrane.

C. EXECUTION:
1. Install in accordance with stone fabricators instructions and TCNA Handbook. Maintain uniform joint width of 1/16-inch. Minimum half unit at edges. Align floor, base and wall joints. Cut and fit units tight to penetrations. Rake joints 1/4 to 3/8-inch and fill with painting mortar. Pack and work into voids. Sound units after setting. Replace hollow sounding units. Apply sealer in accordance with manufacturer recommendations.

09640 - WOOD FLOORING (Refer also to ID drawings)

A. GENERAL:
1. Submittals: Provide finished material samples.
2. Hardwood flooring shall comply with NOFMA grading rules for species and grade.

B. PRODUCTS:
1. Pre-engineered wood floors. Refer to ID drawings:
a. Species and Grade: As scheduled.
b. Thickness: As scheduled.
c. Face Width: As scheduled.

C. EXECUTION:
1. Provide 4'-0" x 4'-0" sample to Owner for review and approval prior to ordering materials or installing flooring.
2. Provide 1/2-inch expansion space at walls and other obstructions and terminations of flooring. Expansion space shall be concealed under base trim.
3. Do not install wood flooring until wet construction work is completed and ambient air at installation space has moisture content stabilized.
4. Concrete slabs under wood floors shall receive Eucopoxy Tufcoat Vax membrane, extended up walls. Verify acceptance with wood floor manufacturer.

09910 – PAINTING

A. GENERAL:
1. Paint all exposed surfaces, unless otherwise indicated.
a. Paint the backside of access panels.
b. Paint prime wood trim prior to installation.
c. Paint all surfaces, including top and bottom of all doors scheduled to be painted.
d. Where items or surfaces are not specifically mentioned, paint the same as similar adjacent materials or areas. If color or finish is not designated, Owner/Interior Designer will select from colors or finishes available.
2. Conform to ANSI/ASTM D16 and Clean Air Act of 1977.
3. "Paint" as used herein means all coating systems, materials including primers, emulsions, enamels, stains, sealers, and fillers, and other applied materials, whether used as prime, intermediate, or finish coats. Provide field sample panels, as directed for illustration of coating color, texture, and finish.

B. PRODUCTS:
1. Single source responsibility: Provide primers, and other undercoat paint produced by same manufacturer as finish coats. Use only thinners and sealants approved by paint manufacturer, and use only within recommended limits.
2. Use only thinners and sealants approved by paint manufacturer, and use only within recommended limits. Prepare surfaces per paint manufacturer's recommendations.
3. Material quality: Sherwin William's low VOC paint.
4. WOOD - (Poplar Trim): Latex System, Eg-Shel / Satin Finish:
a. 1st Coat: S-W Premium Wall and Wood Primer, B28W8111 (4 mils wet, 1.8 mils dry).
b. 2nd Coat: S-W ProClassic Waterborne Acrylic Satin, B20 Series.
c. 3rd Coat: S-W ProClassic Waterborne Acrylic Satin, B20 Series (4 mils wet, 1.2 mils dry per coat)
5. DRYWALL – Level 5: Latex System: Flat Finish:
a. 1st Coat: S-W Premium Wall and Wood Primer, B28W8111 (4 mils wet, 1.8 mils dry).
b. 2nd Coat: S-W SuperPaint Interior Latex Flat, A86 Series.
c. 3rd Coat: S-W SuperPaint Interior Latex Flat, A86 Series.(4 mils wet, 1.7 mils dry per coat).
6. EXTERIOR PAINT SYSTEM CONCRETE Stucco- Smooth and Sand Finish Latex Systems: Satin Finish- Early Moisture Resistant:
a. 1st Coat: S-W Loxon Concrete & Masonry Primer Sealer, A24W8300 (8 mils wet, 3.2 mils dry).
b. 2nd Coat: S-W Resilience Latex Satin, K43 Series.
c. 3rd Coat: S-W Resilience Latex Satin, K43 Series (4 mils wet, 1.52 mils dry per coat).

C. EXECUTION:
1. Deliver products to site in new, original, unopened, sealed and labeled containers. Inspect to verify acceptance. Container labeling to include manufacturer's name, type of paint, brand name, brand code, coverage, surface preparation, drying time, cleanup, color designation, and instructions for mixing and reducing.
2. Surfaces to be painted shall be checked by paint manufacturer or manufacturer's representative to verify acceptable site conditions.
3. Apply products in accordance with manufacturer's instructions. Use applicators and techniques best suited for substrate and type of material being applied. Provide finish coats, which are compatible with prime paints used.
4. Apply high build primer on paperless gypsum board, per manufacturer's requirements. Coordinate with gypsum finishing.
5. "Paints" shall be products of Sherwin Williams Paint (basis of requirement). Use of other manufactures' products requires Owner's prior approval.
6. Include the following:
7. Faux finish on electrical and telephone floor box covers to match surrounding floor finish.
8. Furnish Owner with an additional gallon of each color, as appropriate.

DIVISION 10 – SPECIALTIES:

10523 - FIRE EXTINGUISHERS

A. GENERAL:
1. Fire Extinguishers: NFPA-10, listed and labeled for the type, rating, and classification of extinguisher.
2. Provide fire extinguishers during construction, 1 per 3000 square feet of enclosed space, as required by insurance company.
3. PRODUCTS:
a. Portable Fire Extinguishers Badger 3A40 multipurpose dry-chemical type, UL-rated, 5 lbs.
b. Accessories: Standard brackets for surface mounting and cabinets for recessed mounting.
4. EXECUTION:
a. Install in Kitchen below sink.
b. Install in Garage.

10801 - TOILET AND BATH ACCESSORIES (Refer also to ID drawings)

A. EXECUTION:
1. Install accessories using fasteners appropriate to substrate indicated and recommended by unit manufacturer. Install units level, plumb, and firmly anchored in locations and at heights indicated.
2. Adjust accessories for unencumbered, smooth operation and verify that mechanisms function properly. Replace damaged or defective items. Remove temporary labels and protective coatings.
3. Provide templates and rough-in measurements as required.
4. Deliver inserts and rough-in frames to site as appropriate for incorporation into work.
5. Verify accessories selections with interior designer.

10803 – FRAMELESS SHOWER AND TOILET ENCLOSURES (Refer also to ID drawings)

A. GENERAL:
1. Engineer hinges and components for weight of glazing plus 200 lbs. concentrated load.

B. PRODUCTS:
1. Finish: refer to ID drawings
2. Glass: Clear tempered 1/2-inch thick, minimum safety ASTM C1048 FT, complying with ANSI Z97.1. Class 1 clear with conforming to ANSI Z97.1, HydroShield, at all showers. All glass edges shall be polished and rounded.
3. Fasteners: Screws, bolts, and other devices of same material as accessory unit.
4. Hinges: Adjustable pivot and pin hinges. Hinge shall allow glass to come within 1/32-inch from sidewall or adjacent glass, and be capable of 1/4-inch side-to-side adjustment and 3/16-inch front to back adjustment.
5. Shop drawings and samples

C. EXECUTION:
1. Install enclosure using fasteners appropriate to substrate indicated and recommended by unit manufacturer. Install units level, plumb, and firmly anchored in locations and at heights indicated.
2. Adjust enclosure doors for unencumbered, smooth operation and verify that mechanisms function properly. Replace damaged or defective items. Remove temporary labels and protective coatings.

leader DESIGNSTUDIO
Leader Design Studio, LLC
FL-AR98232

1003 North Orange Ave., Suite A2
Sarasota, Florida 34326
O: (941) 404-8055

GENERAL CONTRACTOR
The Vision Group, LLC
1900 Main Street Suite 205
Sarasota, Florida 34228
O: (941) 357-4040

STRUCTURAL ENGINEER
Apex Consulting Engineers
4315 53rd Avenue East
Bradenton, Florida 34203
O: (941) 365-1900

ENERGY & SUSTAINABILITY CONSULTANTS
ESC, LLC
1348 Fruitville Road
Sarasota, Florida 34236
O: (941) 957-1100

INTERIOR DESIGNER
SAWA Design Studio
1003 North Orange Ave., Suite A2
Sarasota, Florida 34236
O: (941) 564-9291

MAJHER RESIDENCE

7017 Longboat Drive North
Longboat Key, 34228

Project number	LDS-2203
Date	04.27.2023
Drawn by	DM
Checked by	CL
Phase	PERMIT SET

SEAL

STATE OF FLORIDA — CHRISTOPHER LEADER — LICENSE NUMBER AR98232 — REGISTERED ARCHITECT

"To the best of the Architect's or Engineer's knowledge, the plans and specifications comply with the applicable minimum building codes and applicable fire safety standards as determined by local authority in accordance with Chapter 553 and 663 of Florida Statutes."

Christopher Leader
AR 98232

REVISION

No.	Description	Date

BLDG PERMIT PLANS
FILE
Copy of Record

SHEET

SPECIFICATIONS

RECEIVED
SEP 14 2023
TOWN OF LONGBOAT KEY
Planning, Zoning & Building

A0.3

DIVISION 11 - EQUIPMENT:

11451 – RESIDENTIAL APPLIANCES (Refer also to ID drawings)

A. GENERAL:
1. Submittals: Product Data.
2. Warranties shall include coverage of unit, including disconnection of defective unit, and connection of replacement unit.
3. Provide qualified and trained personnel to demonstrate operation of each item of equipment and to instruct Owner in operating and maintenance procedures.
4. Warranties shall begin when Substantial Completion is obtained by Contractor.

B. EXECUTION:
1. Built-in Appliances: Securely anchor to supporting cabinetry or countertops with concealed fasteners. Verify that clearances are adequate for proper functioning and rough openings are completely concealed.
2. Freestanding Appliances: Place in final locations after finishes have been completed in each area. Verify that clearances are adequate to properly operate equipment.
3. Coordinate size of access and route to place of installation.
4. Installation of food services equipment shall include connections to utilities.
5. Provide rough-in hardware, supports, connections, attachment devices, closure trim and accessories for a complete installation. Coordinate with cabinet manufacturer for cabinet insert panel covers. Coordinate and provide required ventilation outlets and clearances.
6. Insulate to prevent electrolysis between dissimilar metals. Adjust equipment and apparatus to ensure proper working order and conditions.
7. Remove masking or protective coverings from finished surfaces. Wash and clean equipment. Polish glass, plastic, hardware and accessories, fixtures and fittings.
8. Test equipment to ensure correct operation.

DIVISION 12 – FURNISHINGS:

NO WORK SPECIFIED UNDER THIS DIVISION

DIVISION 13 - SPECIAL CONSTRUCTION:

NO WORK SPECIFIED UNDER THIS DIVISION

DIVISION 14 - CONVEYING SYSTEMS:

NO WORK SPECIFIED UNDER THIS DIVISION

DIVISION 15 MECHANICAL AND PLUMBING

A. GENERAL:
1. Contractors shall visit site and thoroughly avail themselves of all existing conditions affecting their work and shall include the cost for that work in the Bid. Requests for extra costs for work required to provide a complete installation and connection to all utilities will not be approved.
2. Contractors shall keep an on site and up-to-date set of blueline Record Documents to be delivered to the General Contractor and transferred to reproducibles at the completion of the job to form complete Record Documents drawings. Failure to do so can result in monies being withheld until Record Documents are provided.
3. The Owner will not be held liable for field changes that arise from Contractor error, omission of materials, and workmanship in trade performance and failure in trade coordination.
4. Contractor shall include all necessary fees, connections (including service and service equipment), and charges in his Bid.
5. Contractor shall provide rough-in work for review by Owner/Architect prior to commencement of finish work. Minor relocations of equipment, switches, et cetera (up to 6 feet in any direction) shall be provided during walk-through without additional cost to Owner.
6. Contractor shall receive a complete set of construction documents to bid this project. Owner shall not be liable for any charges due to failure of Contractors review of complete drawings.
7. Warranties for equipment shall begin when Contractor obtains Certificate of Occupancy (or equivalent).
8. Provide structural supports as required at all wall mounted equipment, cabinets, plumbing and light fixtures.

B. MECHANICAL (Refer also to Mechanical drawings):
1. Space heating and cooling system is sized according to heating and cooling loads calculated using ACCA Manual J, or equivalent. Equipment is selected using ACCA Manual S or equivalent.
2. Ducts are air sealed. All duct sealing materials are in conformance with UL181A or UL 181B specifications and are installed in accordance with manufacturer's instructions. For buildings with ducted systems provide product spec or trade contractor's scope of work to confirm use of duct sealing using UL 181 tape, mastic, gaskets, or an IRC or ICC/IMC approved system.
3. Duct system is sized and designed in accordance with ACCA Manual D or equivalent.
4. Contractor shall seal all penetrations through floors, roofs, walls, et cetera and if fire rating is required shall install appropriate fire damming material, fire dampers, et cetera to insure fire integrity of structure.
5. Location of grilles, roof and wall caps, louvers, diffusers, et cetera shall be coordinated to provide proper clearance from other trades including millwork. Supply and return duct grilles shall be ceiling mounted unless otherwise noted and shall be symmetrically located within the space or room they serve all as dimensionally located on the drawings. Adequate clearance shall be maintained from Architectural millwork. All ceiling diffusers shall be 4-way throw or linear as indicated not exceeding 30 NC unless otherwise noted. Roof caps and penetrations shall not be visible from front of residence and shall not be on roof planes facing front.
6. Thermostats shall be programmable types for temperature and humidity. Basis of requirement shall be as manufactured by Honeywell. Location of thermostats shall be installed at 60 inches above finished floor, typically centered on light switch.
7. Mechanical Contractor shall provide a test and balance report providing all CFM readings at all diffusers and shall include that information with Contractor's Punch List and on Record Documents drawings.
8. All equipment within the structure shall be installed on sound and vibration isolators.
9. Refrigerant lines and control wiring shall be concealed in walls from compressor units into building structure.
10. Comply with FEMA Utility Code.
11. HVAC system shall not be used during construction. Temporary cooling system(s) shall be used during construction to maintain acceptable temperature and humidity levels. HVAC warranties shall begin at Date of Substantial Completion.

C. PLUMBING
1. Refer to Interior Design drawings and specifications for a complete plumbing fixture schedule.
2. Plumbing Contractor shall provide work based on construction documents, truss and framing shop drawings and job site visit to visually inspect framing work in progress and to verify required clearances for proper execution/installation of a complete Plumbing system. Obvious connections, equipment, et cetera required to provide a complete job shall be provided at no additional cost whether shown on the construction documents or not. All work shall be in strict accordance with all applicable National and Local Codes/Ordinances including Homeowners Association requirements, if applicable.
3. The construction documents are diagrammatic in nature and the Contractor shall make provisions for intended connections and all connections required whether shown or not. Contractor shall coordinate his work with all other trades to provide adequate clearance, access, connections, location and performance of all systems.
4. Contractor shall seal all penetrations through floors, roofs, walls, etc., and shall install appropriate fire damping material, fire dampers, etc.
5. Contractor to coordinate location of underground waste with foundation drawings and comply with requirements of the Plumbing Code or any codes of Local Government Authority. Contractor to coordinate location and invert elevation of underground sanitary piping with site plan and sewer system connection. Field-verify location, size, and direction of flow, and invert elevation of system and sanitary piping prior to installation of any piping.
6. If any discrepancies should exist on the Construction Documents or existing field conditions, the Contractor shall notify the Architect prior to bidding. The Plumbing Contractor shall include in his work and in Contractor price, all incidental apparatus, appliances, material, labor and services necessary to make work complete in all respects and fully ready for operation. The Contractor shall make such offsets and deviations from work shown on the Drawings, as may be necessary to fit the actual space conditions.
7. All fixtures and equipment shall have shut-off valves at or near equipment.
8. All water piping shall be supported rigidly and in line from building structure. Offset piping to avoid structural members, cants, flashing, mechanical and electrical equipment.
9. Air chambers shall be installed in all locations where required. Josam or approved equal.
10. All hot water piping shall be installed with 1/2" foamed plastic insulation (Armstrong Armaflex or approved equal). Insulation size shall increase with increase in piping size.
11. Where valves occur above drywall or plaster ceilings, or are concealed behind walls, the Contractor shall furnish and install access panels. Contractor shall confirm location is acceptable with Architect/Owner.
12. Installer shall not cut structural members without first securing written approval from the Architect/Engineer.
13. Provide dielectric unions at all connections between dissimilar piping metals.
14. Provide escutcheons where pipes penetrate floors, walls and ceiling. (Verify finish to match Owner selected fixture finish. Basis of requirement shall be brushed nickel.)
15. Floor drains shall be provided with trap primer equal to J.R. Smith 2699CP (brushed nickel, if exposed). Floor drains shall be provided in all utility rooms whether shown or not on drawings. Verify location and finish.
16. All vents through roof shall be 10'-0" minimum from intake on A/C units or make-up air.
17. Piping shall be CPVC in residence.
18. Waste and vent piping shall be schedule 40 PVC with solvent joints unless otherwise noted.
19. Contractor shall provide an option for one Everpure water purification filter system on cold water lines at the kitchen sink. Refrigerator/ice shall have its own filtration system.
20. Provide water bug system throughout home at wet areas.
21. Contractor shall provide whole house water softening system, Kinetico or equivalent.
22. All vent pipes et cetera protruding through roof shall be located on rear side of roof and shall be painted to match roof and should not be visible from street.
23. All hangers, supports, etc., shall be galvanized.
24. Plumbing Contractor shall verify water pressure at water meter and water meter size upon acceptance of proposal by Contractor. Plumbing Contractor shall provide a line item in proposal/contract for:
    a. Increasing water meter and back flow for adequate water pressure.
25. All service to residence from utility shall be underground.
26. Shower heads shall be at 7'-0" typical, minimum or as noted on drawings. Verify with ID drawings, Interior Designer and Owner, on site, prior to rough-in.
27. Water heater shall be exterior tank-less, natural gas type: Rinnai RUR98eN with built-in circulation pump. Confirm with manufacturer number of units (1 minimum) and model number prior to order and installation.

DIVISION 16 – ELECTRICAL

1. Refer to Interior Design drawings and specifications for a complete lighting fixture schedule
2. Electrical Contractor shall visit the site and thoroughly avail himself of all existing conditions affecting the proposed work. All utility connections shall be underground unless otherwise noted and the Contractor shall be responsible for all connections and fees of connections from utility to proposed construction. All work shall be in strict accordance with the current editions of the National Electric Code, Local Codes and Ordinances and requirements by Homeowners Property Association.
3. The construction documents are diagrammatic in nature and the Contractor shall make provisions for intended connections and connections required whether shown or not. Contractor shall coordinate his work with all other trades to provide adequate access, connections, location and performance of all systems.
4. All new materials required shall conform to the standards of the Underwriters Laboratories, Inc. In every case where such a standard has been established for the particular type of material in question, unless otherwise noted.
5. Switches and receptacles shall be Decora by Leviton or by Lutron with screwless faceplates. Color (verify with Interior Designer) shall be white. Location of typical outlets for electric, computer, CATV and telephone shall be 16" above finished floor. Outlets located in rooms where base board is not of suitable height shall be vertical at 18 inches above finished floor. Outlets noted as "above counter" shall be installed horizontally in backsplash. Outlets for connections to equipment shall be located to suit equipment. Switches shall have wall plates suitable for specified number of switches, i.e. 4 switches shall receive 4-gang, and 3 switches shall receive 3-gang, et cetera. Basis of requirement for switches, outlets and wall plates shall be as follows (refer to drawings for 3 way, 4 way, et cetera):
   - Typical on/off switch: Decora concave rocker type.
   - Switches for attics: Decora concave rocker with pilot light.
   - Rheostat switches: Lutron DIVA Decora rocker action dim/bright with separate on/off preset switch. All dimmers shall be sized to adequately accommodate the amperage for the number of devices that the dimmer is to control.
   - Ceiling Fan control: Fan speed control shall be product of fan manufacturer.
   - GFCI receptacles: Decora combination switch/GFCI outlet or Decora duplex GFCI outlet.
   - In-floor receptacles: Steel City P60 round. Confirm finish with ID.
6. All electrical devices and equipment shall be grounded. All branch circuits shall have a separate green insulated ground wire in each conduit run.
7. All electrical runs in attic shall be Romex unless otherwise noted and shall be located together in raceway type located out of traffic or access ways.
8. All equipment, switches, outlets, et cetera shall be roughed-in for Owner/Architect to review prior to commencement of wiring. Minor relocations of equipment, switches, et cetera (up to 6 feet in any direction) shall be provided during walk-through at no cost to Owner.
9. All conductors shall be copper. Minimum size shall be #14 at 15 amp circuits, and #12 at 20 amp or greater in approved raceway.
10. Recessed light fixtures not installed in the conditioned space are air tight, IC rated, and sealed to drywall.
11. A minimum of 50 percent of the total hard-wired lighting fixtures, or the bulbs in those fixtures, qualify as high efficacy or equivalent.
12. Energy efficiency features are implemented to achieve an energy cost performance that meets the 2009 ICC/IECC. A documented analysis using software in accordance with ICC IECC, Section 405, or ICC IECC Section 506.2 through 506.5, applied as defined in the ICC IECC, is required. A building complying with Section 702 shall exceed the baseline minimum performance required by the 2009 ICC IECC by 15 percent. Two Trails Inc. shall provide the analysis prior to ordering of all lighting fixtures.
13. All telephone, television (cable and dish), and security connections from utility to construction shall be underground from utility to inside of garage or location indicated on drawings. Wiring shall be home run to Listec "TecGate" server (or equal) for networking and distribution of television, telephone, and computer. Coordinate with electrical requirements. Wiring for telephone and security, which is exposed in attics, et cetera shall be installed above insulation, in grouped runs, visible, and located so that foot traffic will not damage wiring.
14. The labeling for individual circuits at the panel box(s) shall be typed.
15. Connection to residence for all utilities shall be underground unless otherwise noted. Contractor shall coordinate with Security Company for telephone/security system connections.
16. Contractor shall provide conduit and gas line for Generator. Verify with owner loading of electrical panels.
17. Contractor shall provide conduit for future photovoltaic panels at living and kitchen area.

END

leader DESIGNSTUDIO
Leader Design Studio, LLC
FL-AR98232

1003 North Orange Ave., Suite A2
Sarasota, Florida 34326
O: (941) 404-8055

GENERAL CONTRACTOR
The Vision Group, LLC
1900 Main Street Suite 205
Sarasota, Florida 34228
O: (941) 357-4040

STRUCTURAL ENGINEER
Apex Consulting Engineers
4315 53rd Avenue East
Bradenton, Florida 34203
O: (941) 365-1900

ENERGY & SUSTAINABILITY CONSULTANTS
ESC, LLC
1348 Fruitville Road
Sarasota, Florida 34236
O: (941) 957-1100

INTERIOR DESIGNER
SAWA Design Studio
1003 North Orange Ave., Suite A2
Sarasota, Florida 34236
O: (941) 564-9291

MAJHER RESIDENCE

7017 Longboat Drive North
Longboat Key, 34228

Project number	LDS-2203
Date	04.27.2023
Drawn by	DM
Checked by	CL
Phase	PERMIT SET

SEAL

STATE OF FLORIDA · CHRISTOPHER M. LEADER · REGISTERED ARCHITECT · AR98232

"To the best of the Architect's or Engineer's knowledge, the plans and specifications comply with the applicable minimum building codes and applicable fire safety standards as determined by local authority in accordance with Chapter 553 and 663 of Florida Statutes."

Christopher Leader
AR 98232

REVISION

No.	Description	Date

BLDG PERMIT PLANS
FILE
Copy of Record

SHEET

SPECIFICATIONS

RECEIVED
SEP 14 2023
TOWN OF LONGBOAT KEY
Planning, Zoning & Building

A0.4

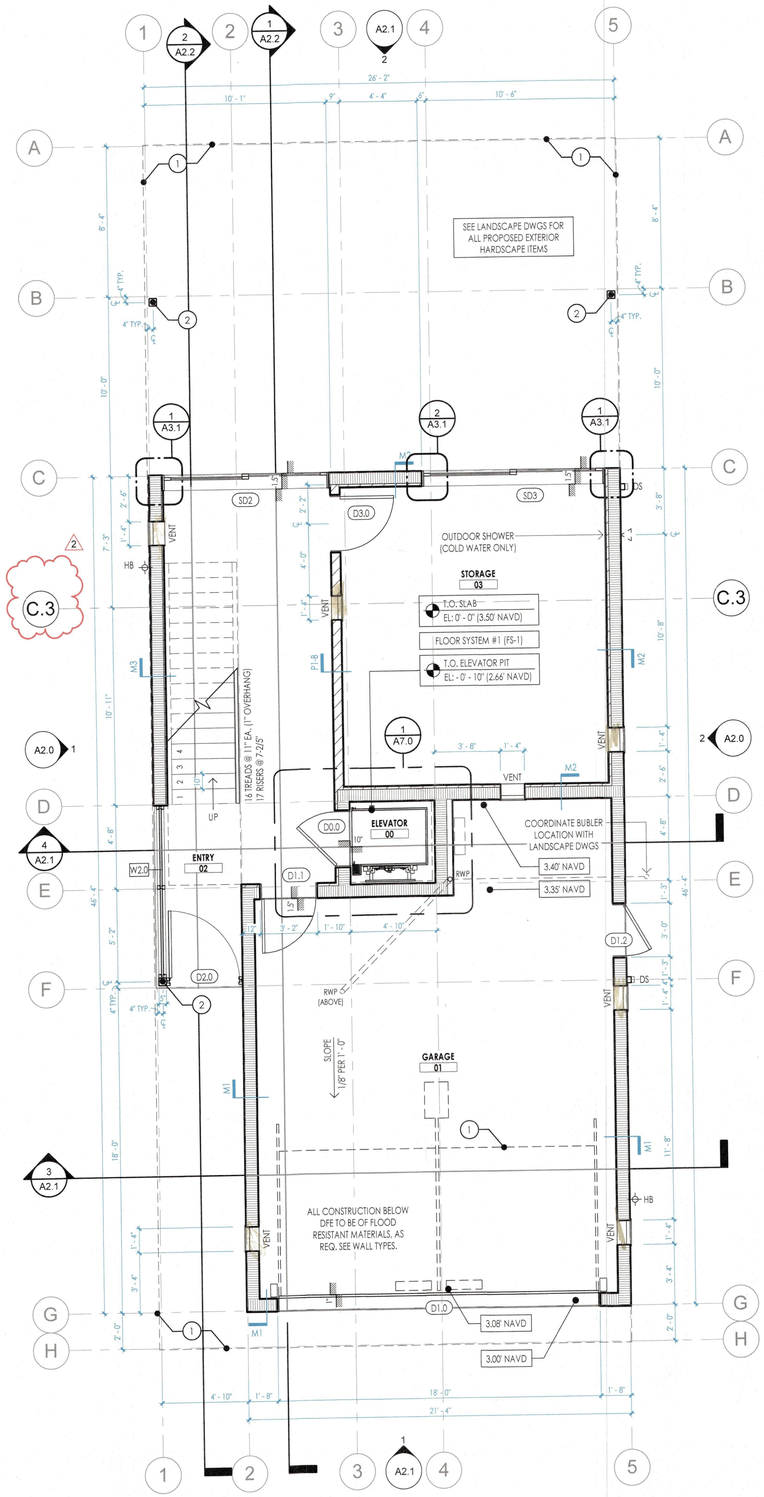

1 GROUND FLOOR PLAN
A1.0 1/4" = 1'-0"

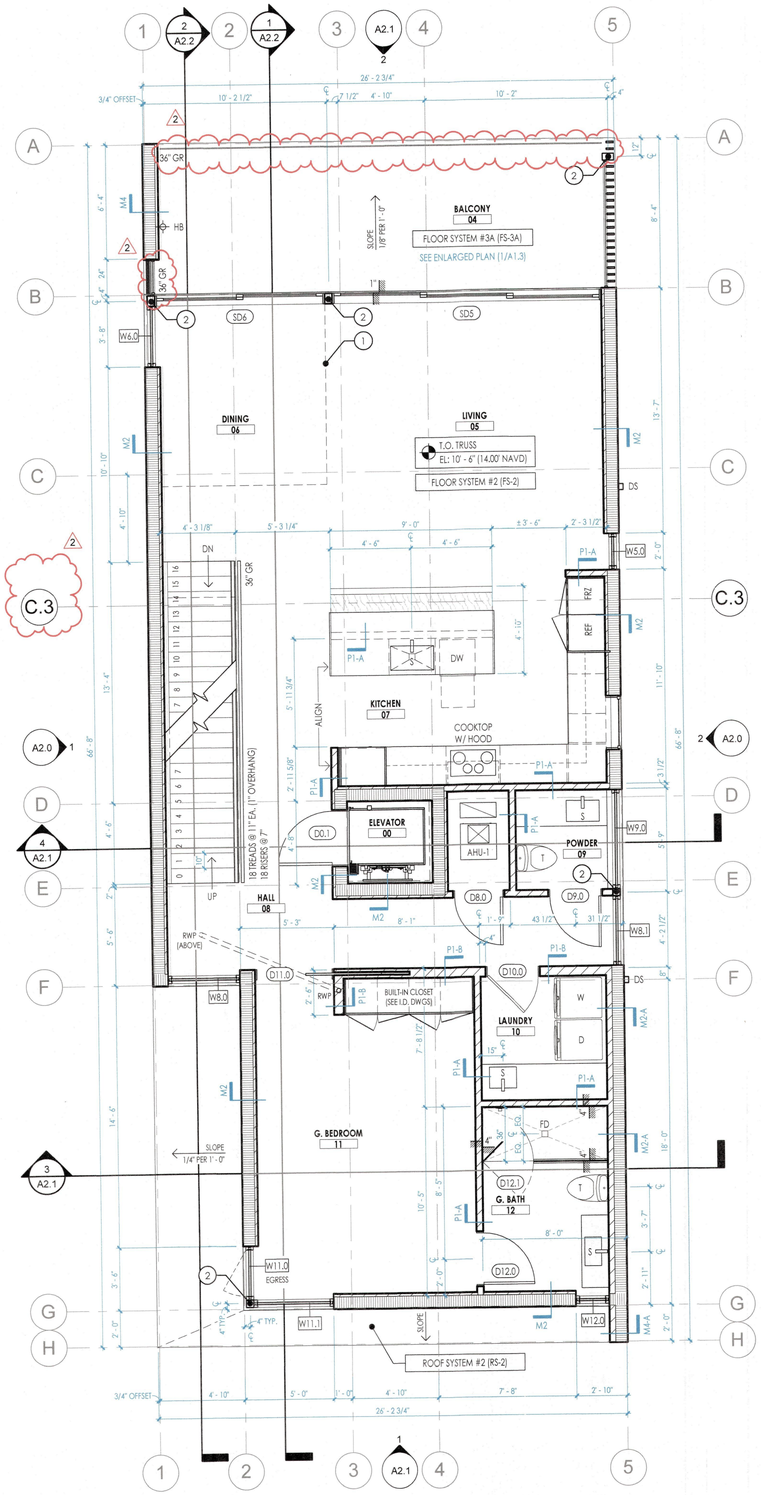

2 FIRST FLOOR PLAN
A1.0 1/4" = 1'-0"

KEY NOTES

1. LINE OF ROOF / STRUCTURE / CEILING / DOOR ABOVE.
2. COLUMN WRAPPED IN BRAKE METAL. SEE STRUCTURAL DWGS.
3. REMOVED (2)
4. BRAKE METAL WRAP, AS REQ. SEE WINDOW DETAILS.
5. ELECTRICAL METER INSTALLED ABOVE D.F.E.
6. PRE-FABRICATED MAILBOX LOCATION. SEE SPECIFICATIONS.
7. REMOVED (2)

GENERAL NOTES

1. SEE INTERIOR DESIGN PRODUCT SPECIFICATIONS FOR ALL PAINT COLORS AND WOOD STAINING.
2. SEE STRUCTURAL DRAWINGS FOR ALL STRUCTURAL ELEMENTS.
3. ALL GRID LINES ARE ALIGNED WITH TO THE FACE OF MASONRY WALLS SHOWN U.N.O.
4. PROPOSED POOL AND SPA ARE TO BE SUBMITTED UNDER A SEPARATE PERMIT.
5. SEE LANDSCAPE ARCHITECTS DRAWINGS FOR INFORMATION ON POOL, SPA AND HARDSCAPE SURFACES.
6. ALL DIMENSIONS ARE FROM FACE OF STRUCTURAL MEMBER U.N.O.
7. FINISH FLOOR ELEVATION OF 3.50' NAVD IS A MINIMUM 1'-6" ABOVE THE ADJACENT ROAD, AS REQUIRED.
8. ALL SPACES BELOW THE DESIGNATED BASE FLOOD ELEVATION (BFE) ARE NOT TO BE USED AS RECREATIONAL AREAS.

FLOOR SYSTEMS

FLOOR SYSTEM #1 (FS-1)
- FLOORING AS SCHEDULED (SEE I.D. FOR FINISH)
- C.I.P. REINFORCED CONCRETE S.O.G. (SEE STRUCTURAL)
- VAPOR BARRIER OVER COMPACTED FILL, AS REQ.

FLOOR SYSTEM #2 (FS-2)
- FLOORING AS SCHEDULED (SEE I.D. FOR FINISH)
- PLYWOOD FLOOR DECK (SEE STRUCTURAL)
- BATT-INSULATION (R-19 MIN.)
- FLOOR TRUSSES OR FRAMING (SEE STRUCTURAL)
- FINISHED CEILING OR EAVE AS SCHEDULED

FLOOR SYSTEM #3 (FS-3A AND FS-3B)
- FLOORING AS SCHEDULED (SEE I.D. FOR FINISH)
- PLI-DEK "U" SYSTEM WATERPROOFING
- INCLEMENT WEATHER INSTALL
- AT FS-3A: PLYWOOD OVER FRAMING (SEE STRUCTURAL)
- AT FS-3B: C.I.P. (SEE STRUCTURAL)
- FINISHED CEILING OR EAVE AS SCHEDULED

WALL SYSTEMS

1. ALL GYPSUM BOARD NOTED IN WET AREAS SHALL BE REPLACED WITH CEMENT BOARD, AS REQ.
2. ALL WOOD STUD PARTITION WALLS ON THE GROUND FLOOR ARE TO BE P.T. WOOD AND 5/8" GYPSUM BOARD IS TO BE SUBSTITUTED FOR 5/8" EXTERIOR DENSGLASS SHEATHING.
3. ALL INTERIOR PARTITIONS ARE TYPE P1-A, U.N.O.

MASONRY WALL SYSTEM #1 (M1)
- EXTERIOR FINISH (SEE EXTERIOR ELEVATIONS)
- 8" REINFORCED CMU BLOCK (SEE STRUCTURAL DWGS)
- CEMENTITIOUS PARGE COAT, PAINTED.

MASONRY WALL SYSTEM #2 (M2 & M2-A)
- EXTERIOR FINISH (SEE EXTERIOR ELEVATIONS)
- 8" REINFORCED CMU BLOCK (SEE STRUCTURAL DWGS)
- 3/4" RIGID RADIANT BARRIER INSULATION
- AT M2: 3/4" P.T. FURRING VERT. @ 16" O.C.
- AT M2-A: 3-1/2" P.T. FURRING VERT. @ 16" O.C.
- 5/8" GYPSUM BOARD, PAINTED.

MASONRY WALL SYSTEM #3 (M3)
- EXTERIOR FINISH (SEE EXTERIOR ELEVATIONS)
- 8" REINFORCED CMU BLOCK (SEE STRUCTURAL DWGS)
- 3/4" P.T. FURRING VERT. @ 16" O.C.
- 5/8" GYPSUM BOARD, PAINTED.

MASONRY WALL SYSTEM #4 (M4 & M4-A)
- EXTERIOR FINISH (SEE EXTERIOR ELEVATIONS)
- 8" REINFORCED CMU BLOCK (SEE STRUCTURAL DWGS)
- AT M4: 3/4" P.T. FURRING VERT. @ 16" O.C.
- AT M4-A: 3-1/2" P.T. FURRING VERT. @ 16" O.C.
- 3/4" EXTERIOR RATED PLYWOOD SHEATHING
- EXTERIOR FINISH (SEE EXTERIOR ELEVATIONS)

PARTITION SYSTEM #1 (P1-A, P1-B AND P1-C)
- 5/8" GYPSUM BOARD, PAINTED.
- AT P1-A: 3-1/2" WOOD STUDS AT 16" O.C.
- AT P1-B: 5-1/2" WOOD STUDS AT 16" O.C.
- AT P1-C: WOOD STUDS AT 16" O.C. (VERIFY DEPTH)
- SOUND BATT INSULATION
- 5/8" GYPSUM BOARD, PAINTED.

FLOOD VENT NOTES

BASIS OF DESIGN
1. AREA OF OPENINGS ARE BASED ON THE NATIONAL FLOOD CERTIFICATE (ICC - ESR 2074) STATING A SINGLE (8" X 16") UNIT "SMART VENT" ACCOMODATES 200 SF OF ENCLOSED AREA.
2. BASIS OF DESIGN:
   - SMART VENT" MODEL 1540-520-WHT (8" X 16")
   - STAINLESS STEEL INSULATED FLOOD VENT
   - SEALING KIT MODEL 1540-526
3. INSTALLATION:
   - SILL MOUNTED MIN. 8" ABOVE FINISHED FLOOR.
   - SILL NOT TO EXCEED 12" ABOVE FINISHED FLOOR.

01 - GARAGE		
	- TOTAL FLOOR AREA:	488 SF.
	- REQUIRED FLOOD VENTS:	488 / 200 = 3 VENTS
	- SEALING KIT:	NOT REQUIRED
02 - ENTRY		
	- TOTAL FLOOR AREA:	226 SF.
	- REQUIRED FLOOD VENTS:	226 / 200 = 2 VENTS
	- SEALING KIT:	REQUIRED
03 - STORAGE		
	- TOTAL FLOOR AREA:	244 SF.
	- REQUIRED FLOOD VENTS:	244 / 200 = 2 VENTS
	- SEALING KIT:	REQUIRED

leader DESIGNSTUDIO
Leader Design Studio, LLC
FL-AR98232

1003 North Orange Ave., Suite A2
Sarasota, Florida 34326
O: (941) 404-8055

GENERAL CONTRACTOR
The Vision Group, LLC
1900 Main Street Suite 205
Sarasota, Florida 34228
O: (941) 357-4040

STRUCTURAL ENGINEER
Apex Consulting Engineers
4315 53rd Avenue East
Bradenton, Florida 34203
O: (941) 365-1900

ENERGY & SUSTAINABILITY CONSULTANTS
ESC, LLC
1348 Fruitville Road
Sarasota, Florida 34236
O: (941) 957-1100

INTERIOR DESIGNER
SAWA Design Studio
1003 North Orange Ave., Suite A2
Sarasota, Florida 34236
O: (941) 564-9291

MAJHER RESIDENCE

7017 Longboat Drive North
Longboat Key, 34228

Project number	LDS-2203
Date	04.27.2023
Drawn by	DM
Checked by	CL
Phase	PERMIT SET

SEAL

STATE OF FLORIDA · CHRISTOPHER H. LEADER · AR98232 · REGISTERED ARCHITECT

"To the best of the Architect's or Engineer's knowledge, the plans and specifications comply with the applicable minimum building codes and applicable fire safety standards as determined by local authority in accordance with Chapter 553 and 663 of Florida Statutes."

Christopher Leader
AR 98232

REVISION

No.	Description	Date
1	BLDG. DEPT. COMMENTS	08/16/23
2	PEDESTAL SYSTEM	02/13/24

BLDG PERMIT PLANS
FILE
Copy of Record

SHEET
FLOOR PLANS

RECEIVED
APR 2 - 2024
TOWN OF LONGBOAT KEY
Planning, Zoning & Building

A1.0

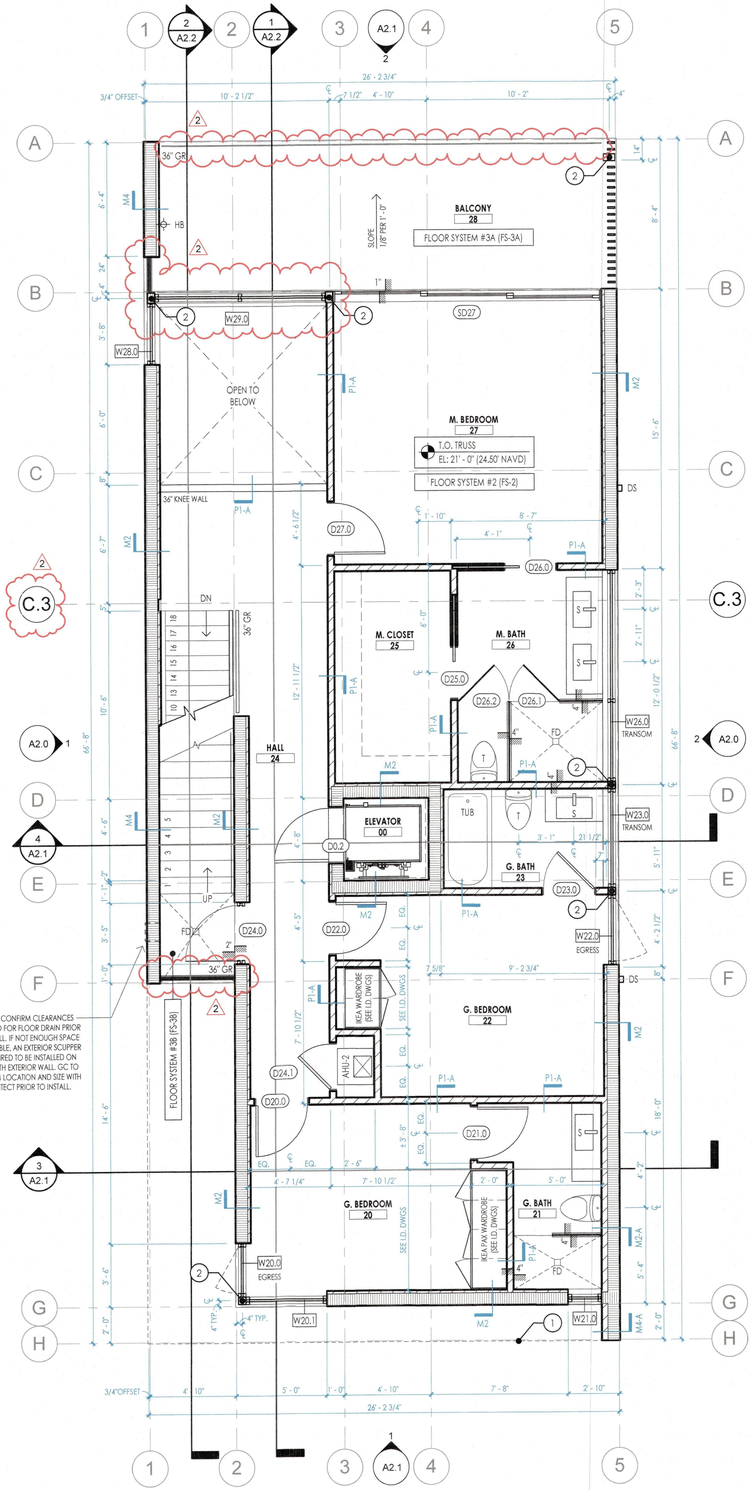

1 SECOND FLOOR PLAN
A1.1 1/4" = 1'-0"

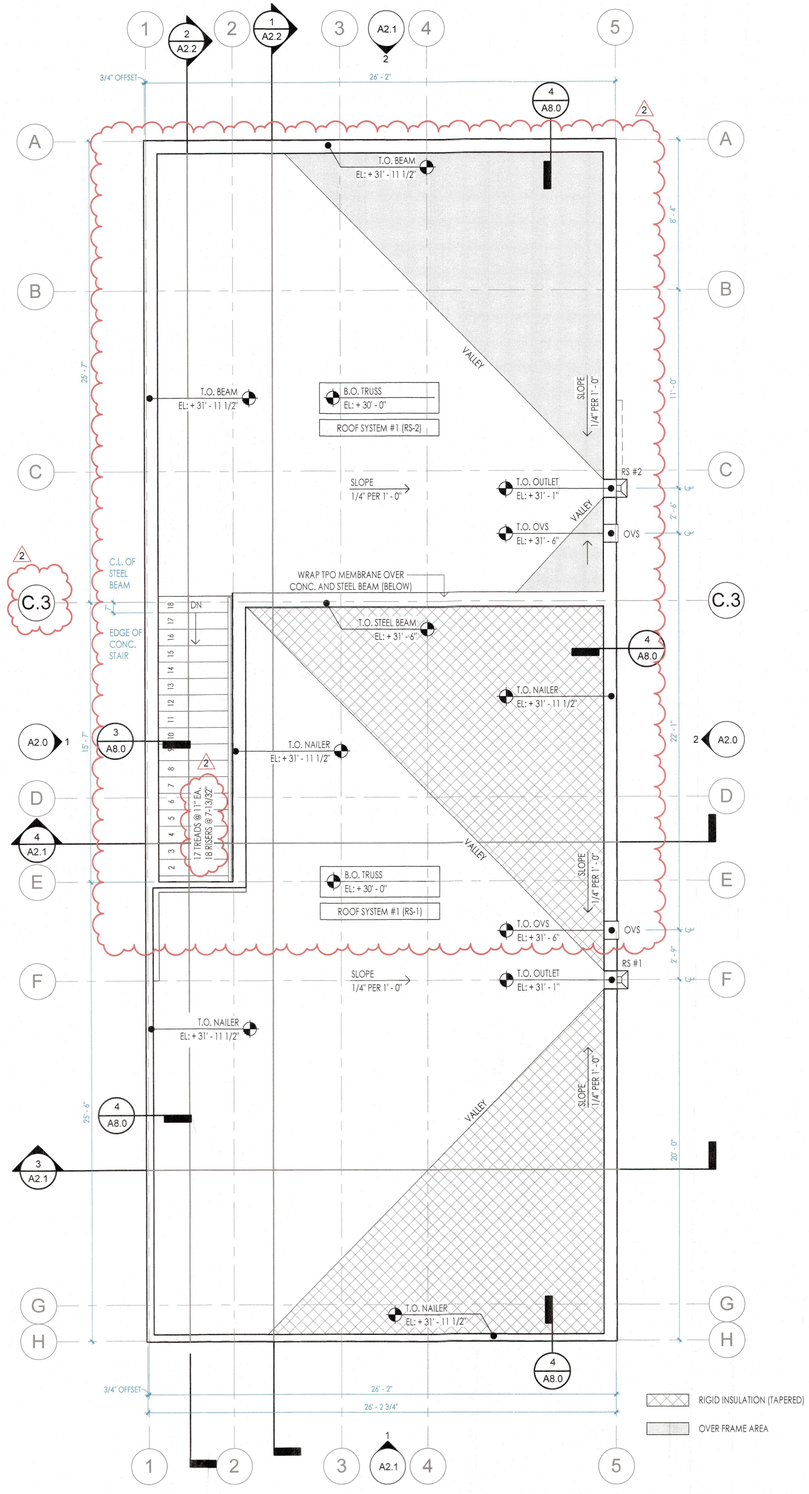

2 ROOF PLAN
A1.1 1/4" = 1'-0"

KEY NOTES

1. LINE OF ROOF / STRUCTURE / CEILING / DOOR ABOVE.
2. COLUMN WRAPPED IN BRAKE METAL. SEE STRUCTURAL DWGS.
3. REMOVED 2
4. BRAKE METAL WRAP, AS REQ. SEE WINDOW DETAILS.
5. ELECTRICAL METER INSTALLED ABOVE D.F.E.
6. PRE-FABRICATED MAILBOX LOCATION. SEE SPECIFICATIONS.
7. REMOVED 2

GENERAL NOTES

1. SEE INTERIOR DESIGN PRODUCT SPECIFICATIONS FOR ALL PAINT COLORS AND WOOD STAINING.
2. SEE STRUCTURAL DRAWINGS FOR ALL STRUCTURAL ELEMENTS.
3. ALL GRID LINES ARE ALIGNED WITH TO THE FACE OF MASONRY WALLS SHOWN U.N.O.
4. PROPOSED POOL AND SPA ARE TO BE SUBMITTED UNDER A SEPARATE PERMIT.
5. SEE LANDSCAPE ARCHITECT'S DRAWINGS FOR INFORMATION ON POOL, SPA AND HARDSCAPE SURFACES.
6. ALL DIMENSIONS ARE FROM FACE OF STRUCTURAL MEMBER U.N.O.
7. FINISH FLOOR ELEVATION OF 3.50' NAVD IS A MINIMUM 1'-6" ABOVE THE ADJACENT ROAD, AS REQUIRED.
8. ALL SPACES BELOW THE DESIGNATED BASE FLOOD ELEVATION (BFE) ARE NOT TO BE USED AS RECREATIONAL AREAS.

FLOOR SYSTEMS

FLOOR SYSTEM #1 (FS-1)
- FLOORING AS SCHEDULED (SEE I.D. FOR FINISH)
- C.I.P. REINFORCED CONCRETE S.O.G. (SEE STRUCTURAL)
- VAPOR BARRIER OVER COMPACTED FILL AS REQ.

FLOOR SYSTEM #2 (FS-2)
- FLOORING AS SCHEDULED (SEE I.D. FOR FINISH)
- PLYWOOD FLOOR DECK (SEE STRUCTURAL)
- BATT-INSULATION (R-19 MIN.)
- FLOOR TRUSSES OR FRAMING (SEE STRUCTURAL)
- FINISHED CEILING OR EAVE AS SCHEDULED

FLOOR SYSTEM #3 (FS-3A AND FS-3B)
- FLOORING AS SCHEDULED (SEE I.D. FOR FINISH)
- PLI-DEK "U" SYSTEM WATERPROOFING
  - INCLEMENT WEATHER INSTALL
- AT FS-3A: PLYWOOD OVER FRAMING (SEE STRUCTURAL)
- AT FS-3B: C.I.P. (SEE STRUCTURAL)
- FINISHED CEILING OR EAVE AS SCHEDULED

WALL SYSTEMS

1. ALL GYPSUM BOARD NOTED IN WET AREAS SHALL BE REPLACED WITH CEMENT BOARD, AS REQ.
2. ALL WOOD STUD PARTITION WALLS ON THE GROUND FLOOR ARE TO BE P.T. WOOD AND 5/8" GYPSUM BOARD IS TO BE SUBSTITUTED FOR 5/8" EXTERIOR DENSGLASS SHEATHING.
3. ALL INTERIOR PARTITIONS ARE TYPE P1-A, U.N.O.

MASONRY WALL SYSTEM #1 (M1)
- EXTERIOR FINISH (SEE EXTERIOR ELEVATIONS)
- 8" REINFORCED CMU BLOCK (SEE STRUCTURAL DWGS)
- CEMENTITIOUS PARGE COAT, PAINTED.

MASONRY WALL SYSTEM #2 (M2 & M2-A)
- EXTERIOR FINISH (SEE EXTERIOR ELEVATIONS)
- 8" REINFORCED CMU BLOCK (SEE STRUCTURAL DWGS)
- 3/4" RIGID RADIANT BARRIER INSULATION
- AT M2: 3/4" P.T. FURRING VERT. @ 16" O.C.
- AT M2-A: 3-1/2" P.T. FURRING VERT. @ 16" O.C.
- 5/8" GYPSUM BOARD, PAINTED.

MASONRY WALL SYSTEM #3 (M3)
- EXTERIOR FINISH (SEE EXTERIOR ELEVATIONS)
- 8" REINFORCED CMU BLOCK (SEE STRUCTURAL DWGS)
- 3/4" P.T. FURRING VERT. @ 16" O.C.
- 5/8" GYPSUM BOARD, PAINTED.

MASONRY WALL SYSTEM #4 (M4 & M4-A)
- EXTERIOR FINISH (SEE EXTERIOR ELEVATIONS)
- 8" REINFORCED CMU BLOCK (SEE STRUCTURAL DWGS)
- AT M4: 3/4" P.T. FURRING VERT. @ 16" O.C.
- AT M4-A: 3-1/2" P.T. FURRING VERT. @ 16" O.C.
- 3/4" EXTERIOR RATED PLYWOOD SHEATHING
- EXTERIOR FINISH (SEE EXTERIOR ELEVATIONS)

PARTITION SYSTEM #1 (P1-A, P1-B AND P1-C)
- 5/8" GYPSUM BOARD, PAINTED.
- AT P1-A: 3-1/2" WOOD STUDS AT 16" O.C.
- AT P1-B: 5-1/2" WOOD STUDS AT 16" O.C.
- AT P1-C: WOOD STUDS AT 16" O.C. (VERIFY DEPTH)
- SOUND BATT INSULATION
- 5/8" GYPSUM BOARD, PAINTED.

ROOF SYSTEMS

1. ALL ROOF DECKS SHALL BY SLOPED 1/4" PER 1'-0" U.N.O.

ROOF SYSTEM #1 (RS-1)
- TPO SINGLE-PLY MEMBRANE
- TAPERED INSULATION (WHERE SHOWN ON ROOF PLAN)
- SECONDARY WATERPROOFING
- PLYWOOD ROOF DECK (SEE STRUCTURAL)
- OPEN CELL SPRAY FOAM INSULATION (R-21 MIN.)
- ROOF TRUSSES OR FRAMING (SEE STRUCTURAL)
- FINISHED CEILING OR EAVE AS SCHEDULED

ROOF SYSTEM #2 (RS-2) 2
- PLI-DEK WATERPROOFING SYSTEM / FINISH
  - INCLEMENT WEATHER INSTALL
- PLYWOOD ROOF DECK (SEE STRUCTURAL)
- ROOF TRUSSES OR FRAMING (SEE STRUCTURAL)
- FINISHED CEILING OR EAVE AS SCHEDULED

ROOF DRAIN CALCS

DRAIN I.D. NO.	ROOF AREA	DOWNSPOUT DIMENSIONS (DS)
RD #1	976 SF.	2" X 3" RECTANGLE
RD #2	638 SF.	2" X 3" RECTANGLE

GC TO PROVIDE DOWNSPOUTS TO COMPLY WITH FBC - PLUMBING CODE SEC. 1106 USING THE ASSUMED RAINFALL RATE OF 4.5" / HOUR

leader DESIGN STUDIO

Leader Design Studio, LLC
FL-AR98232

1003 North Orange Ave., Suite A2
Sarasota, Florida 34326
O: (941) 404-8055

GENERAL CONTRACTOR
The Vision Group, LLC
1900 Main Street Suite 205
Sarasota, Florida 34228
O: (941) 357-4040

STRUCTURAL ENGINEER
Apex Consulting Engineers
4315 53rd Avenue East
Bradenton, Florida 34203
O: (941) 365-1900

ENERGY & SUSTAINABILITY CONSULTANTS
ESC, LLC
1348 Fruitville Road
Sarasota, Florida 34236
O: (941) 957-1100

INTERIOR DESIGNER
SAWA Design Studio
1003 North Orange Ave., Suite A2
Sarasota, Florida 34236
O: (941) 564-9291

MAJHER RESIDENCE

7017 Longboat Drive North
Longboat Key, 34228

Project number	LDS-2203
Date	04.27.2023
Drawn by	DM
Checked by	CL
Phase	PERMIT SET

SEAL

STATE OF FLORIDA · CHRISTOPHER M. LEADER · REGISTERED ARCHITECT · AR98232

"To the best of the Architect's or Engineer's knowledge, the plans and specifications comply with the applicable minimum building codes and applicable fire safety standards as determined by local authority in accordance with Chapter 553 and 663 of Florida Statutes."

Christopher Leader
AR 98232

REVISION

No.	Description	Date
1	BLDG. DEPT. COMMENTS	08/16/23
2	PEDESTAL SYSTEM	02/13/24

BLDG PERMIT PLANS
FILE
Copy of Record

SHEET
FLOOR PLANS

RECEIVED
APR 2 - 2024
TOWN OF LONGBOAT
Planning, Zoning & Build.

A1.1

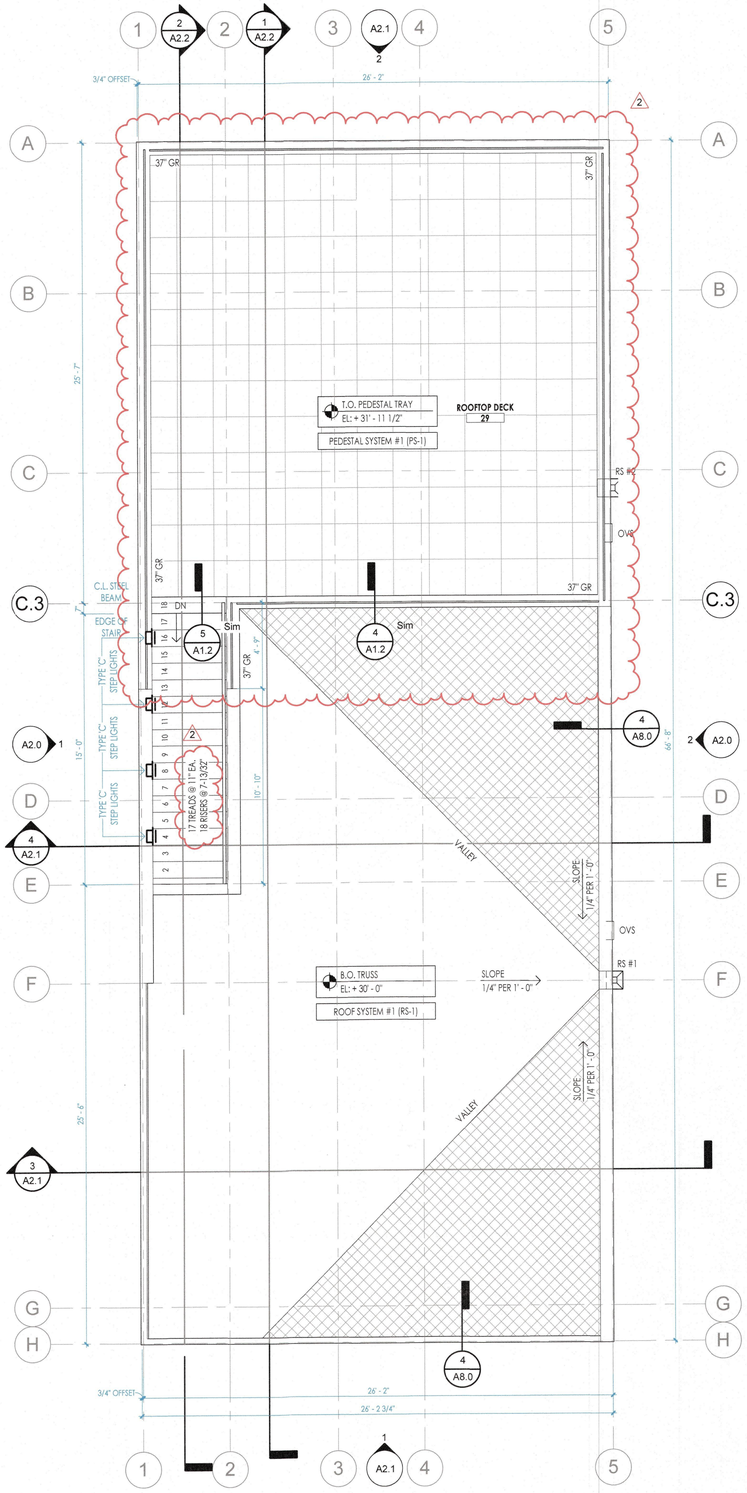

1 ROOF PLAN
A1.2 1/4" = 1'-0"

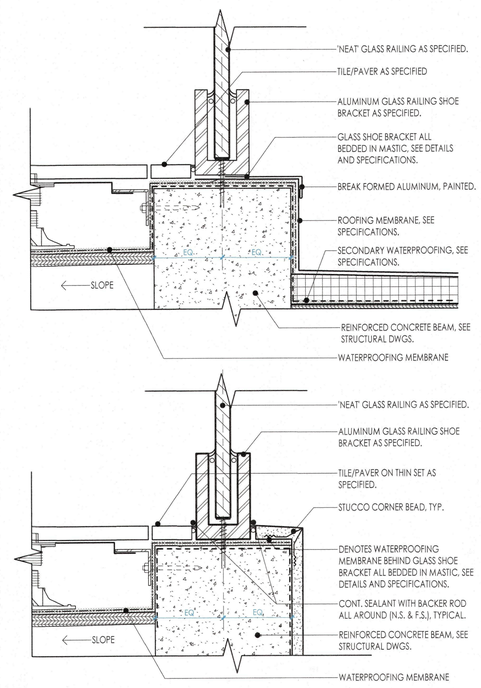

2 GLASS RAILING ATTACHMENT
A1.2 3" = 1'-0"

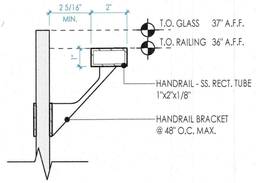

6 HANDRAIL BRACKET DETAIL
A1.2 3" = 1'-0"

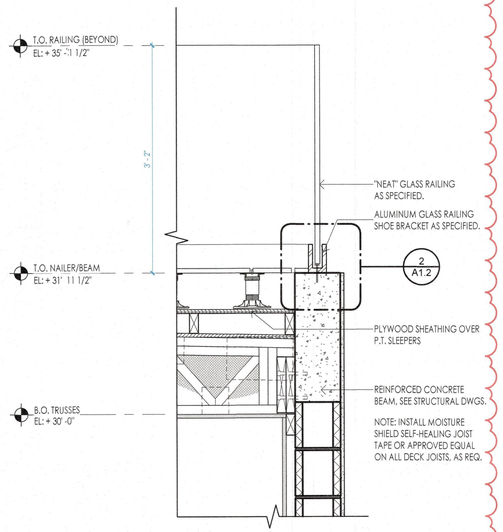

3 DETAIL - ROOFTOP DECK EDGE
A1.2 1" = 1'-0"

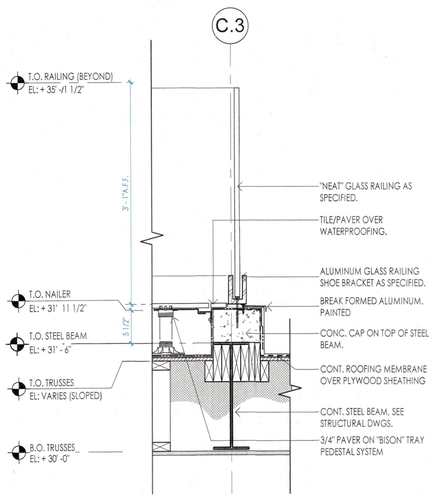

4 DETAIL - ROOFTOP DECK EDGE
A1.2 1" = 1'-0"

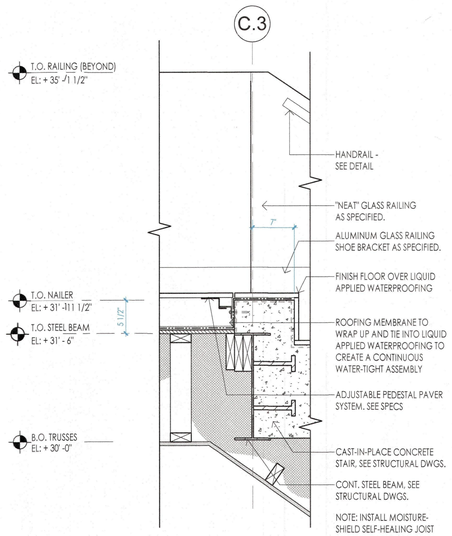

5 DETAIL - STAIR TRANSITION
A1.2 1" = 1'-0"

KEY NOTES

1. LINE OF ROOF / STRUCTURE / CEILING / DOOR ABOVE.
2. COLUMN WRAPPED IN BRAKE METAL. SEE STRUCTURAL DWGS.
3. REMOVED 2
4. BRAKE METAL WRAP. AS REQ. SEE WINDOW DETAILS.
5. ELECTRICAL METER INSTALLED ABOVE D.F.E.
6. PRE-FABRICATED MAILBOX LOCATION. SEE SPECIFICATIONS.
7. REMOVED 2

GENERAL NOTES

1. SEE INTERIOR DESIGN PRODUCT SPECIFICATIONS FOR ALL PAINT COLORS AND WOOD STAINING.
2. SEE STRUCTURAL DRAWINGS FOR ALL STRUCTURAL ELEMENTS.
3. ALL GRID LINES ARE ALIGNED WITH TO THE FACE OF MASONRY WALLS SHOWN U.N.O.
4. PROPOSED POOL AND SPA ARE TO BE SUBMITTED UNDER A SEPARATE PERMIT.
5. SEE LANDSCAPE ARCHITECTS DRAWINGS FOR INFORMATION ON POOL, SPA AND HARDSCAPE SURFACES.
6. ALL DIMENSIONS ARE FROM FACE OF STRUCTURAL MEMBER U.N.O.
7. FINISH FLOOR ELEVATION OF 3.50' NAVD IS A MINIMUM 1'-6" ABOVE THE ADJACENT ROAD, AS REQUIRED.
8. ALL SPACES BELOW THE DESIGNATED BASE FLOOD ELEVATION (BFE) ARE NOT TO BE USED AS RECREATIONAL AREAS.

FLOOR SYSTEMS

FLOOR SYSTEM #1 (FS-1)
- FLOORING AS SCHEDULED (SEE I.D. FOR FINISH)
- C.I.P. REINFORCED CONCRETE S.O.G. (SEE STRUCTURAL)
- VAPOR BARRIER OVER COMPACTED FILL. AS REQ.

FLOOR SYSTEM #2 (FS-2)
- FLOORING AS SCHEDULED (SEE I.D. FOR FINISH)
- PLYWOOD FLOOR DECK (SEE STRUCTURAL)
- BATT-INSULATION (R-19 MIN.)
- FLOOR TRUSSES OR FRAMING (SEE STRUCTURAL)
- FINISHED CEILING OR EAVE AS SCHEDULED

FLOOR SYSTEM #3 (FS-3A AND FS-3B)
- FLOORING AS SCHEDULED (SEE I.D. FOR FINISH)
- PLI-DEK "I" SYSTEM WATERPROOFING
  - INCLEMENT WEATHER INSTALL
- AT FS-3A: PLYWOOD OVER FRAMING (SEE STRUCTURAL)
- AT FS-3B: C.I.P. (SEE STRUCTURAL)
- FINISHED CEILING OR EAVE AS SCHEDULED

WALL SYSTEMS

1. ALL GYPSUM BOARD NOTED IN WET AREAS SHALL BE REPLACED WITH CEMENT BOARD, AS REQ.
2. ALL WOOD STUD PARTITION WALLS ON THE GROUND FLOOR ARE TO BE P.T. WOOD AND 5/8" GYPSUM BOARD IS TO BE SUBSTITUTED FOR 5/8" EXTERIOR DENSGLASS SHEATHING.
3. ALL INTERIOR PARTITIONS ARE TYPE P1-A, U.N.O.

MASONRY WALL SYSTEM #1 (M1)
- EXTERIOR FINISH (SEE EXTERIOR ELEVATIONS)
- 8" REINFORCED CMU BLOCK (SEE STRUCTURAL DWGS)
- CEMENTITIOUS PARGE COAT, PAINTED.

MASONRY WALL SYSTEM #2 (M2 & M2-A)
- EXTERIOR FINISH (SEE EXTERIOR ELEVATIONS)
- 8" REINFORCED CMU BLOCK (SEE STRUCTURAL DWGS)
- 3/4" RIGID RADIANT BARRIER INSULATION
- AT M2: 3/4" P.T. FURRING VERT. @ 16" O.C.
- AT M2-A: 3-1/2" P.T. FURRING VERT. @ 16" O.C.
- 5/8" GYPSUM BOARD, PAINTED.

MASONRY WALL SYSTEM #3 (M3)
- EXTERIOR FINISH (SEE EXTERIOR ELEVATIONS)
- 8" REINFORCED CMU BLOCK (SEE STRUCTURAL DWGS)
- 3/4" P.T. FURRING VERT. @ 16" O.C.
- 5/8" GYPSUM BOARD, PAINTED.

MASONRY WALL SYSTEM #4 (M4 & M4-A)
- EXTERIOR FINISH (SEE EXTERIOR ELEVATIONS)
- 8" REINFORCED CMU BLOCK (SEE STRUCTURAL DWGS)
- AT M4: 3/4" P.T. FURRING VERT. @ 16" O.C.
- AT M4-A: 3-1/2" P.T. FURRING VERT. @ 16" O.C.
- 3/4" EXTERIOR RATED PLYWOOD SHEATHING
- EXTERIOR FINISH (SEE EXTERIOR ELEVATIONS)

PARTITION SYSTEM #1 (P1-A, P1-B AND P1-C)
- 5/8" GYPSUM BOARD, PAINTED.
- AT P1-A: 3-1/2" WOOD STUDS AT 16" O.C.
- AT P1-B: 5-1/2" WOOD STUDS AT 16" O.C.
- AT P1-C: WOOD STUDS AT 16" O.C. (VERIFY DEPTH)
- SOUND BATT INSULATION
- 5/8" GYPSUM BOARD, PAINTED.

ROOF SYSTEMS

1. ALL ROOF DECKS SHALL BY SLOPED 1/4" PER 1'-0" U.N.O.

ROOF SYSTEM #1 (RS-1)
- TPO SINGLE-PLY MEMBRANE
- TAPERED INSULATION (WHERE SHOWN ON ROOF PLAN)
- SECONDARY WATERPROOFING
- PLYWOOD ROOF DECK (SEE STRUCTURAL)
- OPEN CELL SPRAY FOAM INSULATION (R-21 MIN.)
- ROOF TRUSSES OR FRAMING (SEE STRUCTURAL)
- FINISHED CEILING OR EAVE AS SCHEDULED

ROOF SYSTEM #2 (RS-2)
- PLI-DEK WATERPROOFING SYSTEM / FINISH
  - INCLEMENT WEATHER INSTALL
- PLYWOOD ROOF DECK (SEE STRUCTURAL)
- ROOF TRUSSES OR FRAMING (SEE STRUCTURAL)
- FINISHED CEILING OR EAVE AS SCHEDULED

ROOFTOP DECK SYSTEM

2

PEDESTAL SYSTEM #1 (PS-1)
- PORCELAIN PAVERS OVER ADJUSTABLE PEDESTAL SYSTEM
- WATERPROOFING SYSTEM (PLI-DEK)
- PLYWOOD ROOF DECK (SEE STRUCTURAL)
- P.T. SLEEPERS (OVERFRAME)
- ROOF SYSTEM AS SCHEDULED

leader DESIGNSTUDIO
Leader Design Studio, LLC
FL-AR98232

1003 North Orange Ave., Suite A2
Sarasota, Florida 34326
O: (941) 404-8055

GENERAL CONTRACTOR
The Vision Group, LLC
1900 Main Street Suite 205
Sarasota, Florida 34228
O: (941) 357-4040

STRUCTURAL ENGINEER
Apex Consulting Engineers
4315 53rd Avenue East
Bradenton, Florida 34203
O: (941) 365-1900

ENERGY & SUSTAINABILITY CONSULTANTS
ESC, LLC
1348 Fruitville Road
Sarasota, Florida 34236
O: (941) 957-1100

INTERIOR DESIGNER
SAWA Design Studio
1003 North Orange Ave., Suite A2
Sarasota, Florida 34236
O: (941) 564-9291

MAJHER RESIDENCE

7017 Longboat Drive North
Longboat Key, 34228

Project number	LDS-2203
Date	04.27.2023
Drawn by	DM
Checked by	CL
Phase	PERMIT SET

SEAL

STATE OF FLORIDA — CHRISTOPHER M. LEADER — AR98232 — REGISTERED ARCHITECT

"To the best of the Architect's or Engineer's knowledge, the plans and specifications comply with the applicable minimum building codes and applicable fire safety standards as determined by local authority in accordance with Chapter 553 and 663 of Florida Statutes."

Christopher Leader
AR 98232

REVISION

No.	Description	Date
1	BLDG. DEPT. COMMENTS	08/16/23
2	PEDESTAL SYSTEM	02/13/24

SHEET
ROOFTOP DECK

RECEIVED
APR 04 2024
TOWN OF LONGBOAT KEY
Planning, Zoning & Building

BLDG PERMIT PLANS FILE
Copy of Record

A1.2

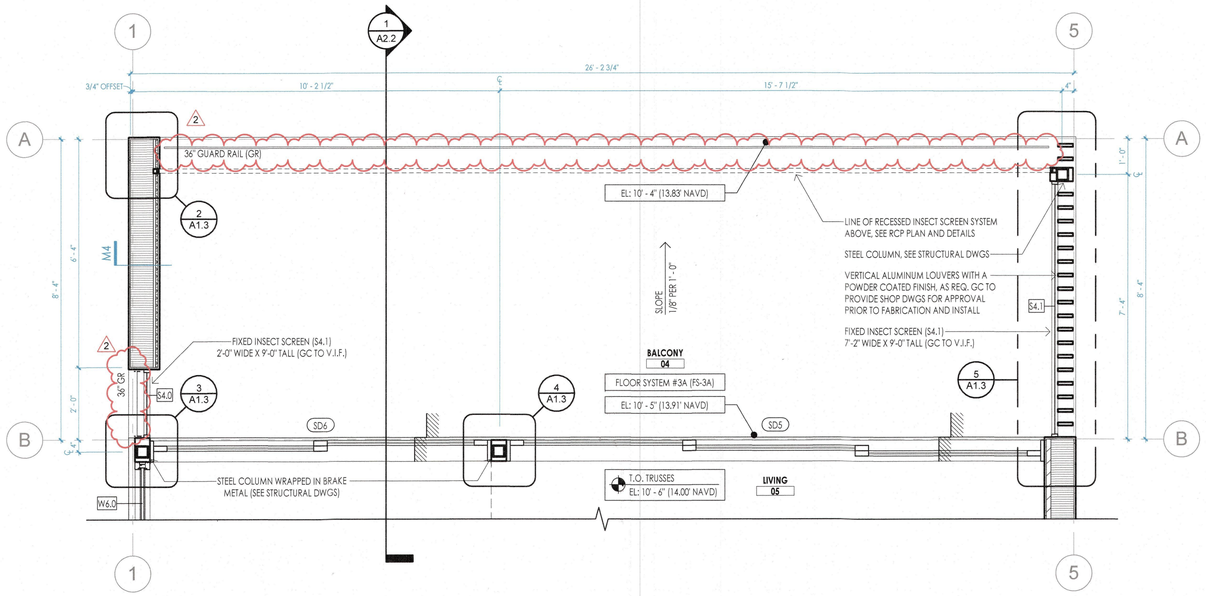

1 A1.3 ENLARGED PLAN - 04 BALCONY
1/2" = 1'-0"

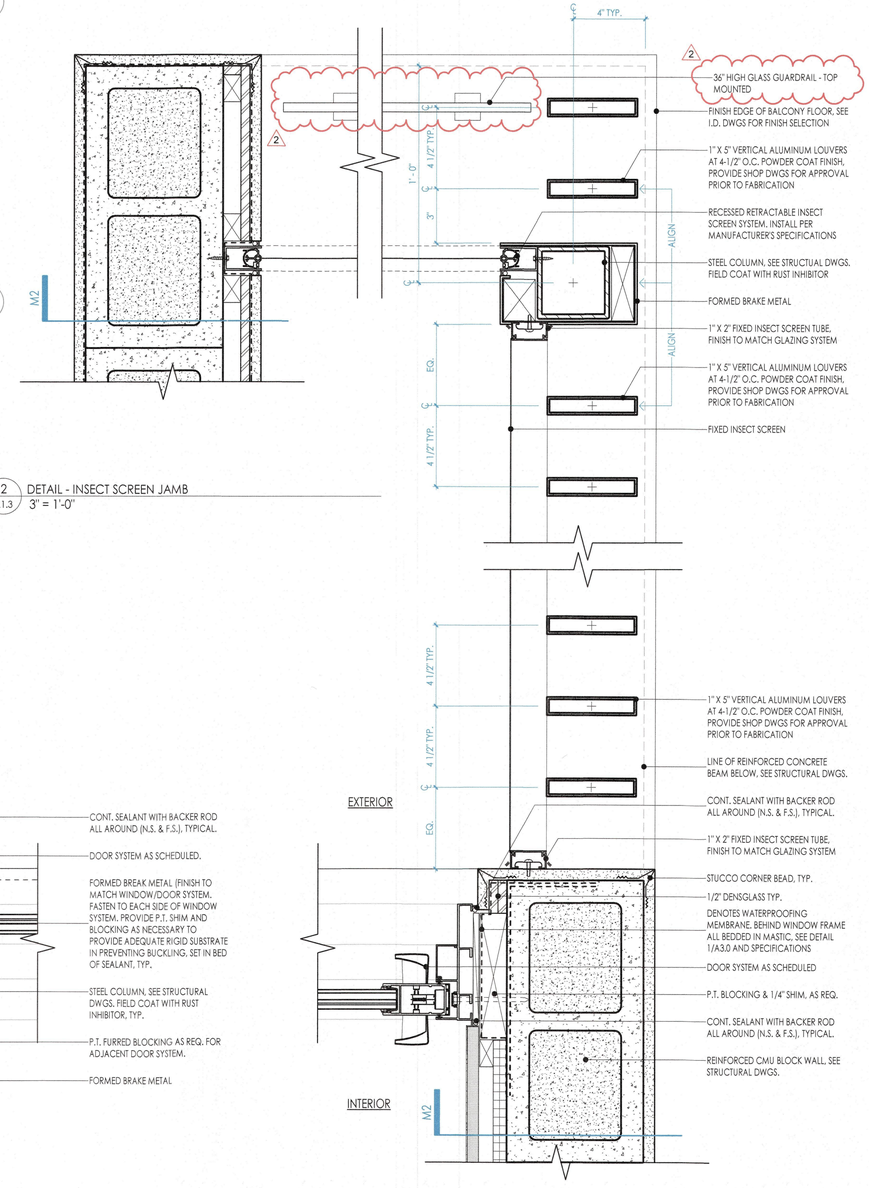

2 A1.3 DETAIL - INSECT SCREEN JAMB
3" = 1'-0"

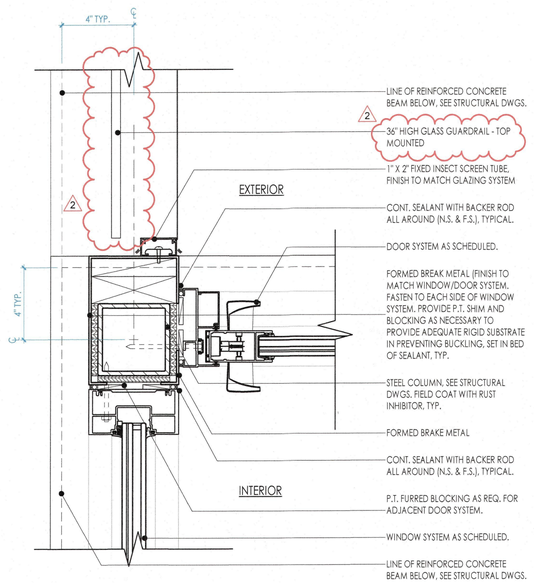

3 A1.3 DETAIL - WINDOW / SLIDING DOOR JAMB AT POST
3" = 1'-0"

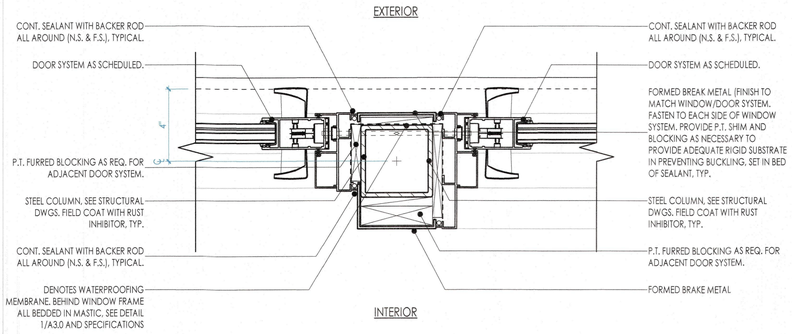

4 A1.3 DETAIL - SLIDING GLASS DOOR JAMB AT POST
3" = 1'-0"

5 A1.3 DETAIL - INSECT SCREEN JAMB
3" = 1'-0"

leader DESIGNSTUDIO
Leader Design Studio, LLC
FL-AR98232

1003 North Orange Ave., Suite A2
Sarasota, Florida 34326
O: (941) 404-8055

GENERAL CONTRACTOR
The Vision Group, LLC
1900 Main Street Suite 205
Sarasota, Florida 34228
O: (941) 357-4040

STRUCTURAL ENGINEER
Apex Consulting Engineers
4315 53rd Avenue East
Bradenton, Florida 34203
O: (941) 365-1900

ENERGY & SUSTAINABILITY CONSULTANTS
ESC, LLC
1348 Fruitville Road
Sarasota, Florida 34236
O: (941) 957-1100

INTERIOR DESIGNER
SAWA Design Studio
1003 North Orange Ave., Suite A2
Sarasota, Florida 34236
O: (941) 564-9291

MAJHER RESIDENCE

7017 Longboat Drive North
Longboat Key, 34228

Project number	LDS-2203
Date	04.27.2023
Drawn by	DM
Checked by	CL
Phase	PERMIT SET

SEAL

STATE OF FLORIDA · CHRISTOPHER R. LEADER · REGISTERED ARCHITECT · AR98232

"To the best of the Architect's or Engineer's knowledge, the plans and specifications comply with the applicable minimum building codes and applicable fire safety standards as determined by local authority in accordance with Chapter 553 and 663 of Florida Statutes."
Christopher Leader
AR 98232

REVISION

No.	Description	Date
1	BLDG. DEPT. COMMENTS	08/16/23
2	PEDESTAL SYSTEM	02/13/24

SHEET
ENLARGED PLAN & DETAILS

RECEIVED
APR 2 - 2024
TOWN OF LONGBOAT KEY
Planning, Zoning & Building
BLDG PERMIT PLANS
FILE
Copy of Record

A1.3

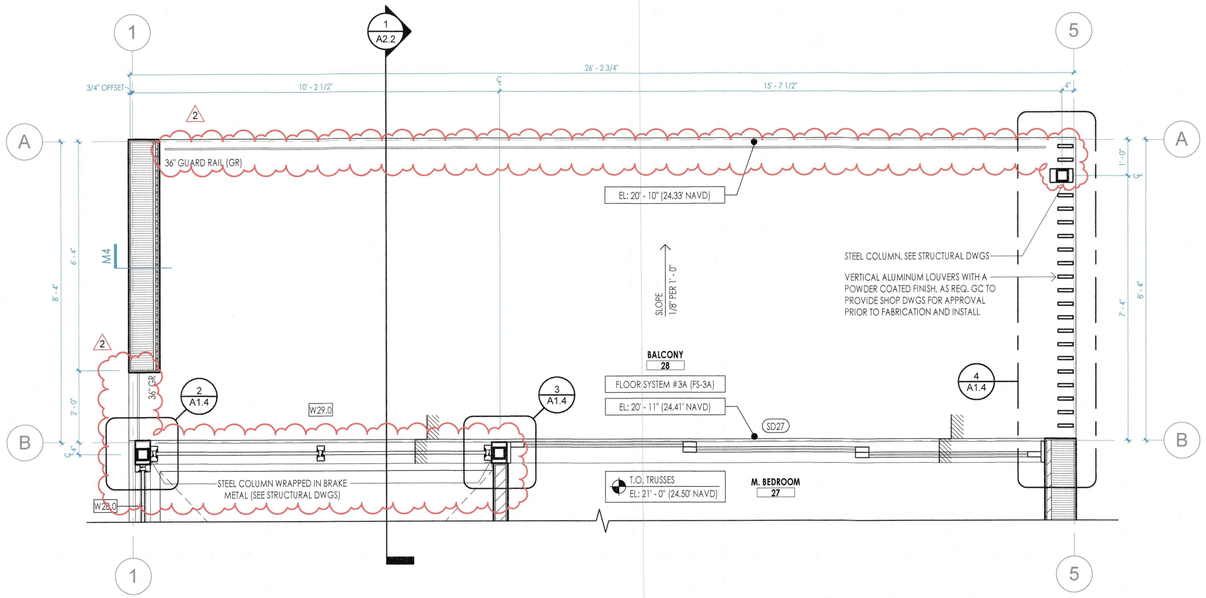

1 A1.4 ENLARGED PLAN - 28 BALCONY
1/2" = 1'-0"

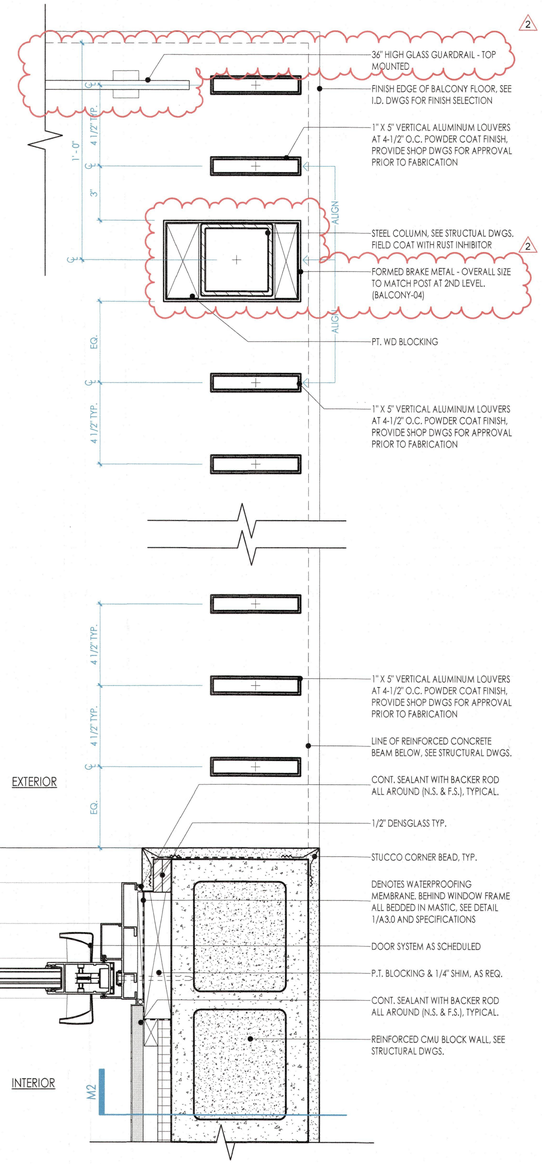

4 A1.4 DETAIL - VERTICAL LOUVER JAMB
3" = 1'-0"

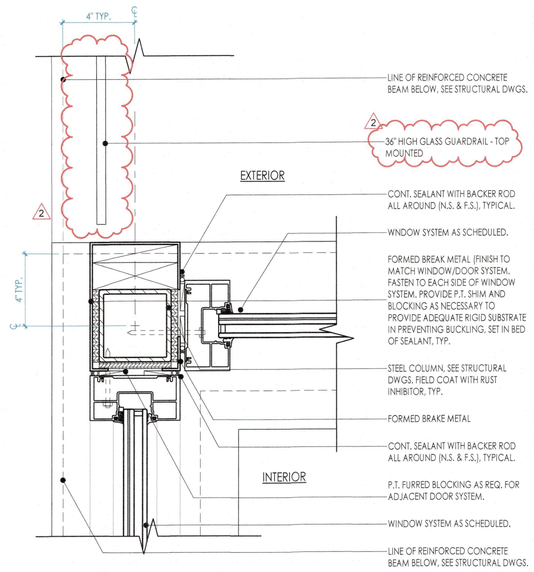

2 A1.4 DETAIL - WINDOW / SLIDING DOOR JAMB AT POST
3" = 1'-0"

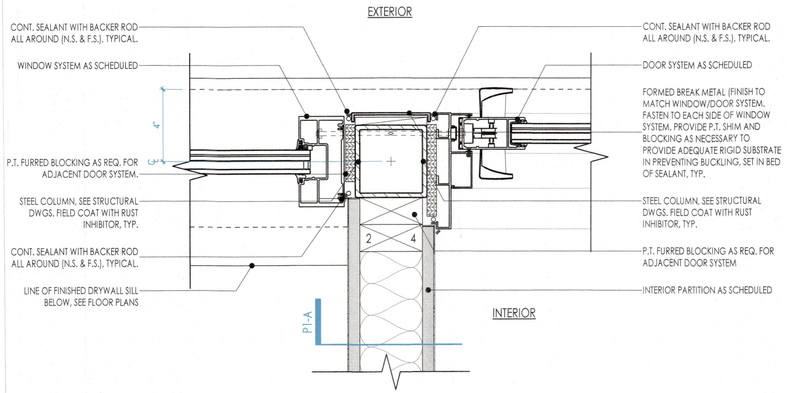

3 A1.4 DETAIL - SLIDING GLASS DOOR JAMB AT POST
3" = 1'-0"

RECEIVED
APR 2 - 2024
TOWN OF LONGBOAT KEY
Planning, Zoning & Building

leader DESIGNSTUDIO
Leader Design Studio, LLC
FL-AR98232

1003 North Orange Ave., Suite A2
Sarasota, Florida 34326
O: (941) 404-8055

GENERAL CONTRACTOR
The Vision Group, LLC
1900 Main Street Suite 205
Sarasota, Florida 34228
O: (941) 357-4040

STRUCTURAL ENGINEER
Apex Consulting Engineers
4315 53rd Avenue East
Bradenton, Florida 34203
O: (941) 365-1900

ENERGY & SUSTAINABILITY CONSULTANTS
ESC, LLC
1348 Fruitville Road
Sarasota, Florida 34236
O: (941) 957-1100

INTERIOR DESIGNER
SAWA Design Studio
1003 North Orange Ave., Suite A2
Sarasota, Florida 34236
O: (941) 564-9291

MAJHER RESIDENCE

7017 Longboat Drive North
Longboat Key, 34228

Project number	LDS-2203
Date	04.27.2023
Drawn by	DM
Checked by	CL
Phase	PERMIT SET

SEAL

STATE OF FLORIDA · CHRISTOPHER R. LEADER · AR98232 · REGISTERED ARCHITECT

"To the best of the Architect's or Engineer's knowledge, the plans and specifications comply with the applicable minimum building codes and applicable fire safety standards as determined by local authority in accordance with Chapter 553 and 663 of Florida Statutes."

Christopher Leader
AR 98232

REVISION

No.	Description	Date
1	BLDG. DEPT. COMMENTS	08/16/23
2	PEDESTAL SYSTEM	02/13/24

SHEET

ENLARGED PLAN & DETAILS

BLDG PERMIT PLANS
FILE
Copy of Record

A1.4

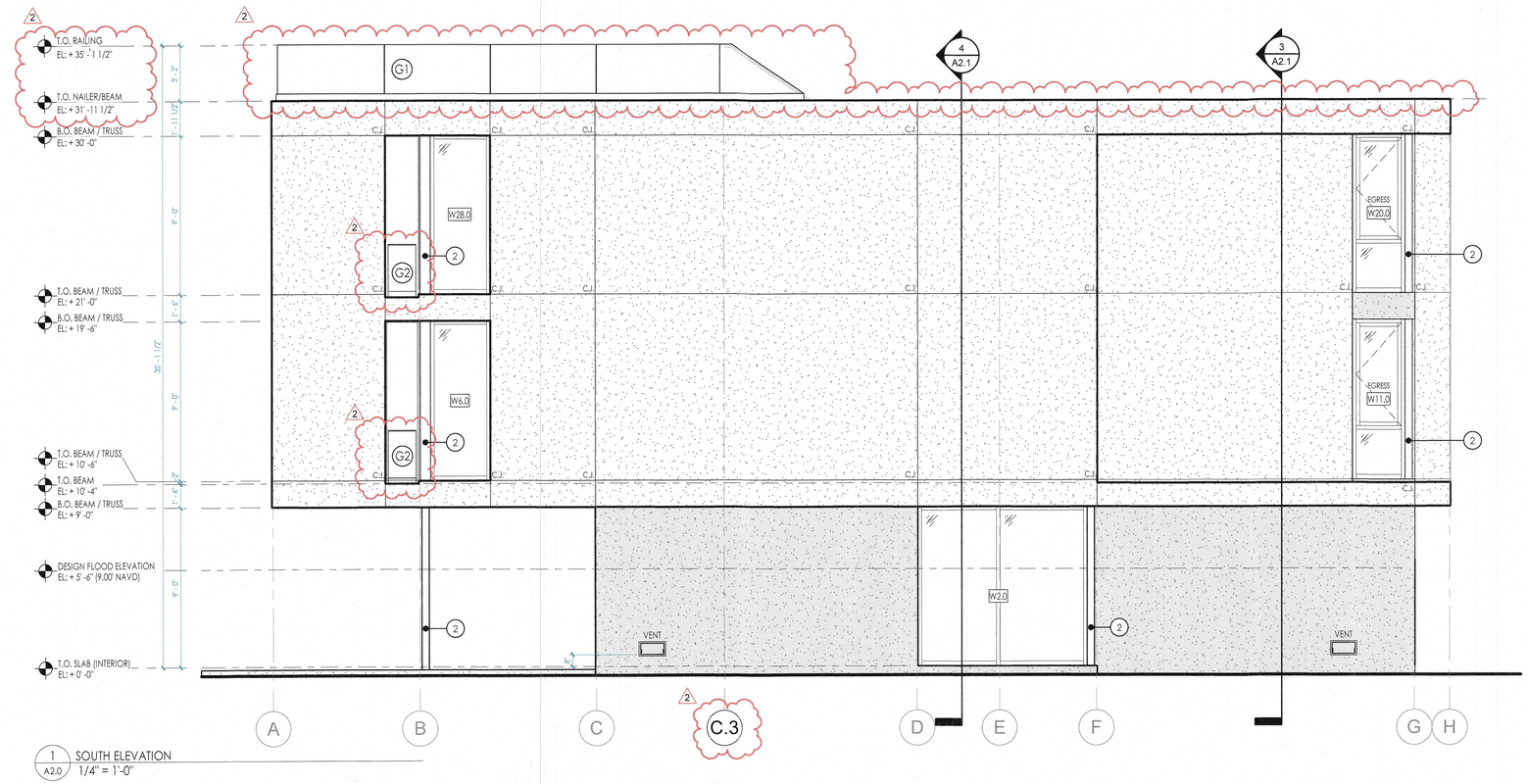

1 A2.0 SOUTH ELEVATION
1/4" = 1'-0"

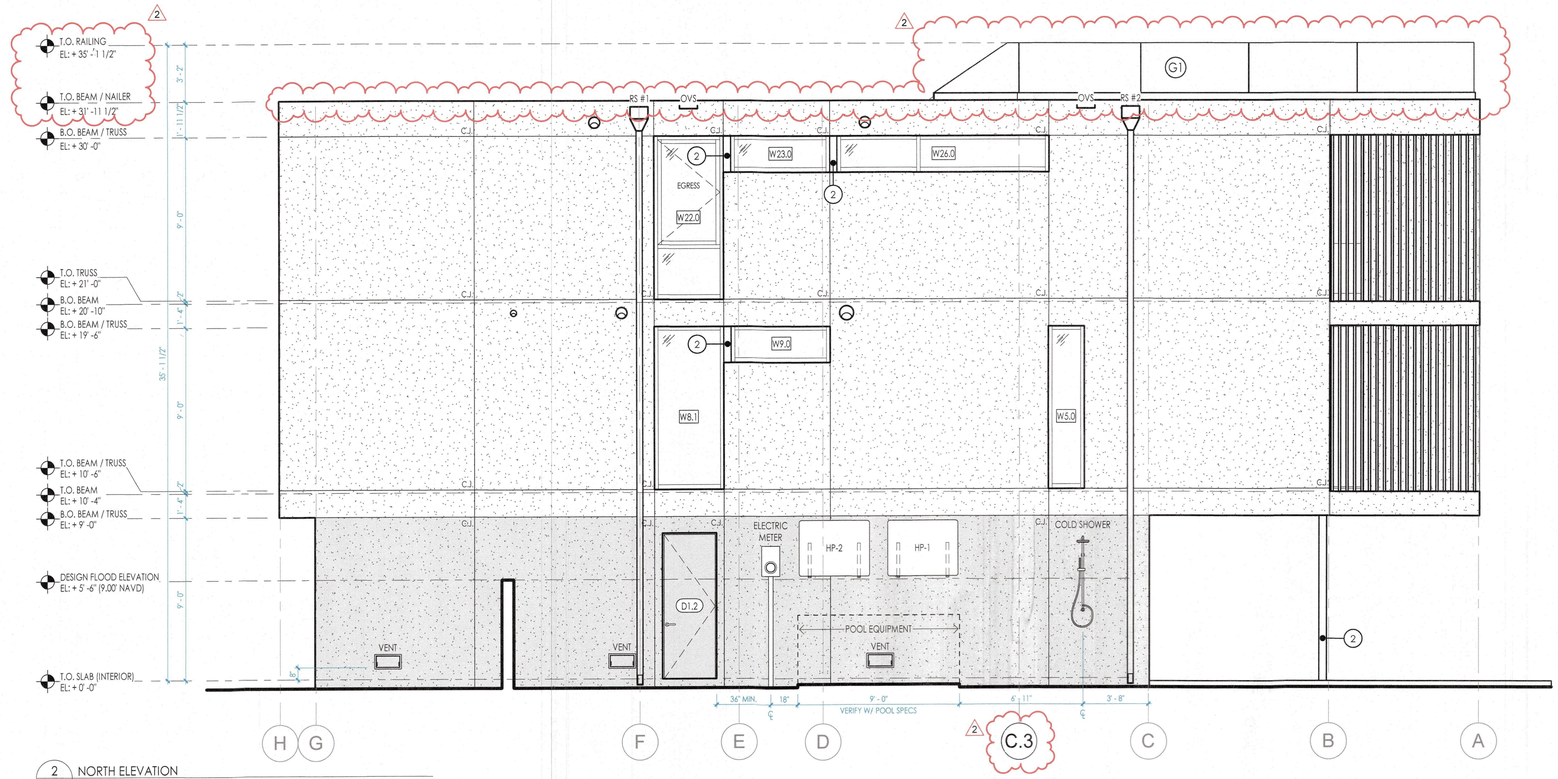

2 A2.0 NORTH ELEVATION
1/4" = 1'-0"

KEY NOTES

1. LINE OF ROOF / STRUCTURE / CEILING / DOOR ABOVE.
2. COLUMN WRAPPED IN BRAKE METAL. SEE STRUCTURAL DWGS.
3. REMOVED 2
4. BRAKE METAL WRAP, AS REQ. SEE WINDOW DETAILS.
5. ELECTRICAL METER INSTALLED ABOVE D.F.E.
6. PRE-FABRICATED MAILBOX LOCATION, SEE SPECIFICATIONS.
7. REMOVED 2

GENERAL NOTES

1. SEE INTERIOR DESIGN PRODUCT SPECIFICATIONS FOR ALL PAINT COLORS AND WOOD STAINING.
2. SEE STRUCTURAL DRAWINGS FOR ALL STRUCTURAL ELEMENTS.
3. ALL GRID LINES ARE ALIGNED WITH TO THE FACE OF MASONRY WALLS SHOWN U.N.O.
4. PROPOSED POOL AND SPA ARE TO BE SUBMITTED UNDER A SEPARATE PERMIT.
5. SEE LANDSCAPE ARCHITECTS DRAWINGS FOR INFORMATION ON POOL, SPA AND HARDSCAPE SURFACES.
6. ALL DIMENSIONS ARE FROM FACE OF STRUCTURAL MEMBER U.N.O.
7. FINISH FLOOR ELEVATION OF 3.50' NAVD IS A MINIMUM 1'-6" ABOVE THE ADJACENT ROAD, AS REQUIRED.
8. ALL SPACES BELOW THE DESIGNATED BASE FLOOD ELEVATION (BFE) ARE NOT TO BE USED AS RECREATIONAL AREAS.

EXTERIOR FINISH LEGEND

FINISH A
- 5/8" SAND SMOOTH CEMENT PLASTER, PAINTED PRIMARY EXTERIOR COLOR. SEE I.D. DWGS.
- EXTERIOR METAL WIRE LATH REQUIRED FOR AREAS WITH A WOOD SUBSTRATE, AS REQ.

FINISH B
- 5/8" SAND SMOOTH CEMENT PLASTER, PAINTED ACCENT EXTERIOR COLOR. SEE I.D. DWGS.

FINISH C
- FORMED BRAKE METAL
- LIQUID APPLIED WATERPROOFING

leader DESIGNSTUDIO
Leader Design Studio, LLC
FL-AR98232

1003 North Orange Ave., Suite A2
Sarasota, Florida 34326
O: (941) 404-8055

GENERAL CONTRACTOR
The Vision Group, LLC
1900 Main Street Suite 205
Sarasota, Florida 34228
O: (941) 357-4040

STRUCTURAL ENGINEER
Apex Consulting Engineers
4315 53rd Avenue East
Bradenton, Florida 34203
O: (941) 365-1900

ENERGY & SUSTAINABILITY CONSULTANTS
ESC, LLC
1348 Fruitville Road
Sarasota, Florida 34236
O: (941) 957-1100

INTERIOR DESIGNER
SAWA Design Studio
1003 North Orange Ave., Suite A2
Sarasota, Florida 34236
O: (941) 564-9291

MAJHER RESIDENCE

7017 Longboat Drive North
Longboat Key, 34228

Project number	LDS-2203
Date	04.27.2023
Drawn by	DM
Checked by	CL
Phase	PERMIT SET

SEAL

STATE OF FLORIDA · CHRISTOPHER N. LEADER · REGISTERED ARCHITECT · AR98232

"To the best of the Architect's or Engineer's knowledge, the plans and specifications comply with the applicable minimum building codes and applicable fire safety standards as determined by local authority in accordance with Chapter 553 and 663 of Florida Statutes."

Christopher Leader
AR 98232

REVISION

No.	Description	Date
1	BLDG. DEPT. COMMENTS	08/16/23
2	PEDESTAL SYSTEM	02/13/24

SHEET

EXTERIOR ELEVATIONS

RECEIVED
APR 2 - 2024
TOWN OF LONGBOAT KEY
Planning, Zoning & Building

BLDG PERMIT PLANS
FILE
Copy of Record

A2.0

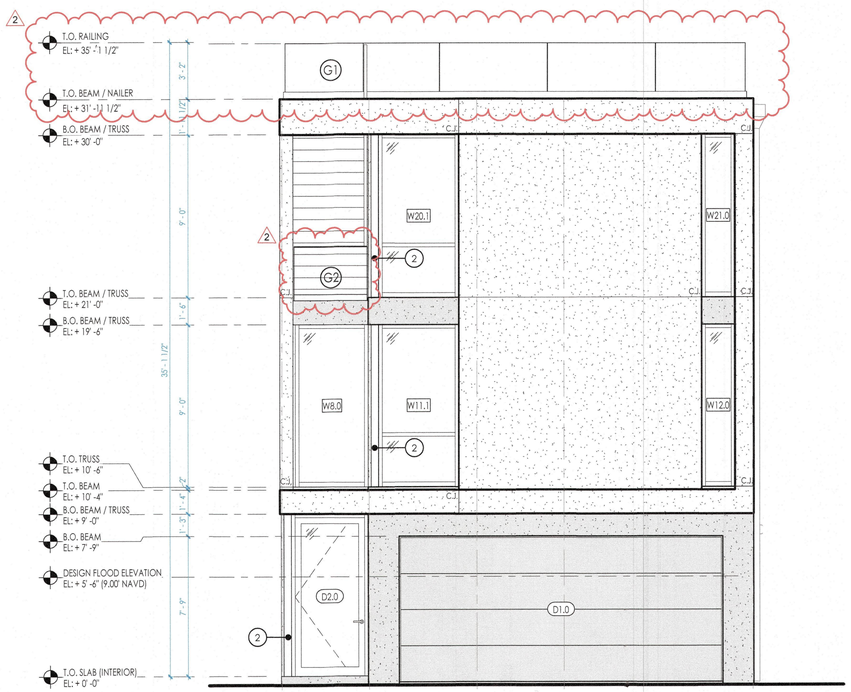

1 A2.1 EAST ELEVATION
1/4" = 1'-0"

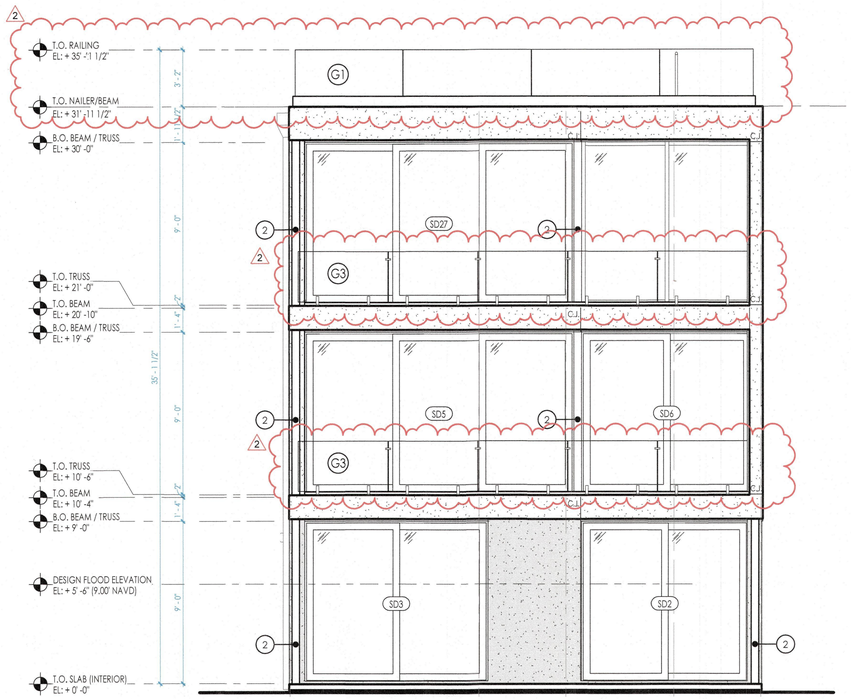

2 A2.1 WEST ELEVATION
1/4" = 1'-0"

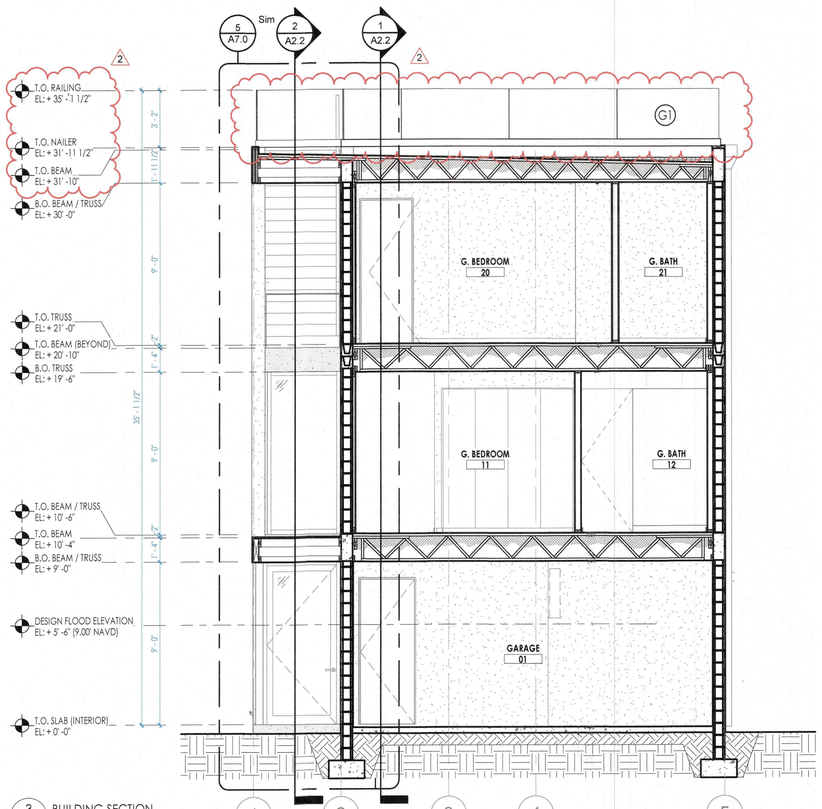

3 A2.1 BUILDING SECTION
1/4" = 1'-0"

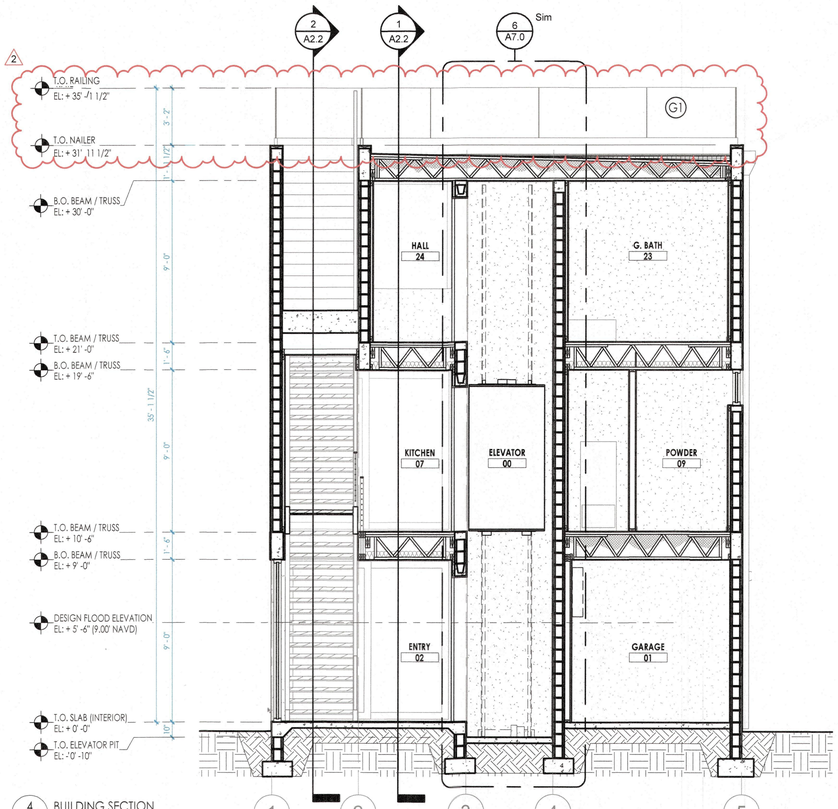

4 A2.1 BUILDING SECTION
1/4" = 1'-0"

KEY NOTES

1. LINE OF ROOF / STRUCTURE / CEILING / DOOR ABOVE.
2. COLUMN WRAPPED IN BRAKE METAL. SEE STRUCTURAL DWGS.
3. REMOVED 2
4. BRAKE METAL WRAP, AS REQ. SEE WINDOW DETAILS.
5. ELECTRICAL METER INSTALLED ABOVE D.F.E.
6. PRE-FABRICATED MAILBOX LOCATION. SEE SPECIFICATIONS.
7. REMOVED 2

GENERAL NOTES

1. SEE INTERIOR DESIGN PRODUCT SPECIFICATIONS FOR ALL PAINT COLORS AND WOOD STAINING.
2. SEE STRUCTURAL DRAWINGS FOR ALL STRUCTURAL ELEMENTS.
3. ALL GRID LINES ARE ALIGNED WITH TO THE FACE OF MASONRY WALLS SHOWN U.N.O.
4. PROPOSED POOL AND SPA ARE TO BE SUBMITTED UNDER A SEPARATE PERMIT.
5. SEE LANDSCAPE ARCHITECTS DRAWINGS FOR INFORMATION ON POOL, SPA AND HARDSCAPE SURFACES.
6. ALL DIMENSIONS ARE FROM FACE OF STRUCTURAL MEMBER U.N.O.
7. FINISH FLOOR ELEVATION OF 3.50' NAVD IS A MINIMUM 1'-6" ABOVE THE ADJACENT ROAD, AS REQUIRED.
8. ALL SPACES BELOW THE DESIGNATED BASE FLOOD ELEVATION (BFE) ARE NOT TO BE USED AS RECREATIONAL AREAS.

EXTERIOR FINISH LEGEND

FINISH A
- 5/8" SAND SMOOTH CEMENT PLASTER, PAINTED PRIMARY EXTERIOR COLOR. SEE I.D. DWGS.
- EXTERIOR METAL WIRE LATH REQUIRED FOR AREAS WITH A WOOD SUBSTRATE, AS REQ.

FINISH B
- 5/8" SAND SMOOTH CEMENT PLASTER, PAINTED ACCENT EXTERIOR COLOR. SEE I.D. DWGS.

FINISH C
- FORMED BRAKE METAL
- LIQUID APPLIED WATERPROOFING

RECEIVED
APR 2 - 2024
TOWN OF LONGBOAT KEY
Planning, Zoning & Building

leader DESIGN STUDIO

Leader Design Studio, LLC
FL-AR98232

1003 North Orange Ave., Suite A2
Sarasota, Florida 34326
O: (941) 404-8055

GENERAL CONTRACTOR
The Vision Group, LLC
1900 Main Street Suite 205
Sarasota, Florida 34228
O: (941) 357-4040

STRUCTURAL ENGINEER
Apex Consulting Engineers
4315 53rd Avenue East
Bradenton, Florida 34203
O: (941) 365-1900

ENERGY & SUSTAINABILITY CONSULTANTS
ESC, LLC
1348 Fruitville Road
Sarasota, Florida 34236
O: (941) 957-1100

INTERIOR DESIGNER
SAWA Design Studio
1003 North Orange Ave., Suite A2
Sarasota, Florida 34236
O: (941) 564-9291

MAJHER RESIDENCE

7017 Longboat Drive North
Longboat Key, 34228

Project number	LDS-2203
Date	04.27.2023
Drawn by	DM
Checked by	CL
Phase	PERMIT SET

SEAL

STATE OF FLORIDA · CHRISTOPHER R. LEADER · AR98232 · REGISTERED ARCHITECT

"To the best of the Architect's or Engineer's knowledge, the plans and specifications comply with the applicable minimum building codes and applicable fire safety standards as determined by local authority in accordance with Chapter 553 and 663 of Florida Statutes."

Christopher Leader
AR 98232

REVISION

No.	Description	Date
1	BLDG. DEPT. COMMENTS	08/16/23
2	PEDESTAL SYSTEM	02/13/24

SHEET

EXTERIOR ELEVATIONS

BLDG PERMIT PLANS
FILE
Copy of Record

A2.1

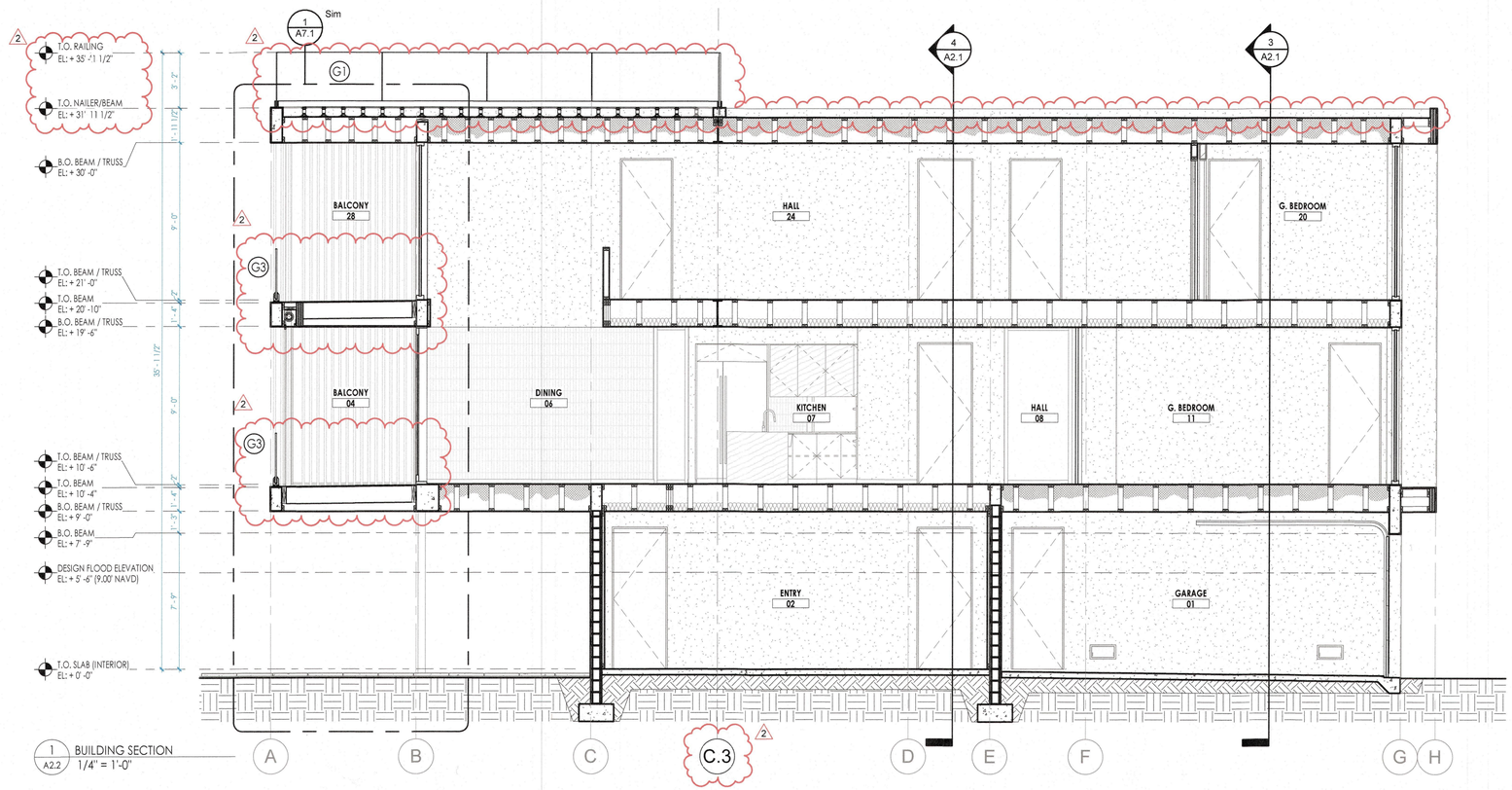

1 A2.2 BUILDING SECTION 1/4" = 1'-0"

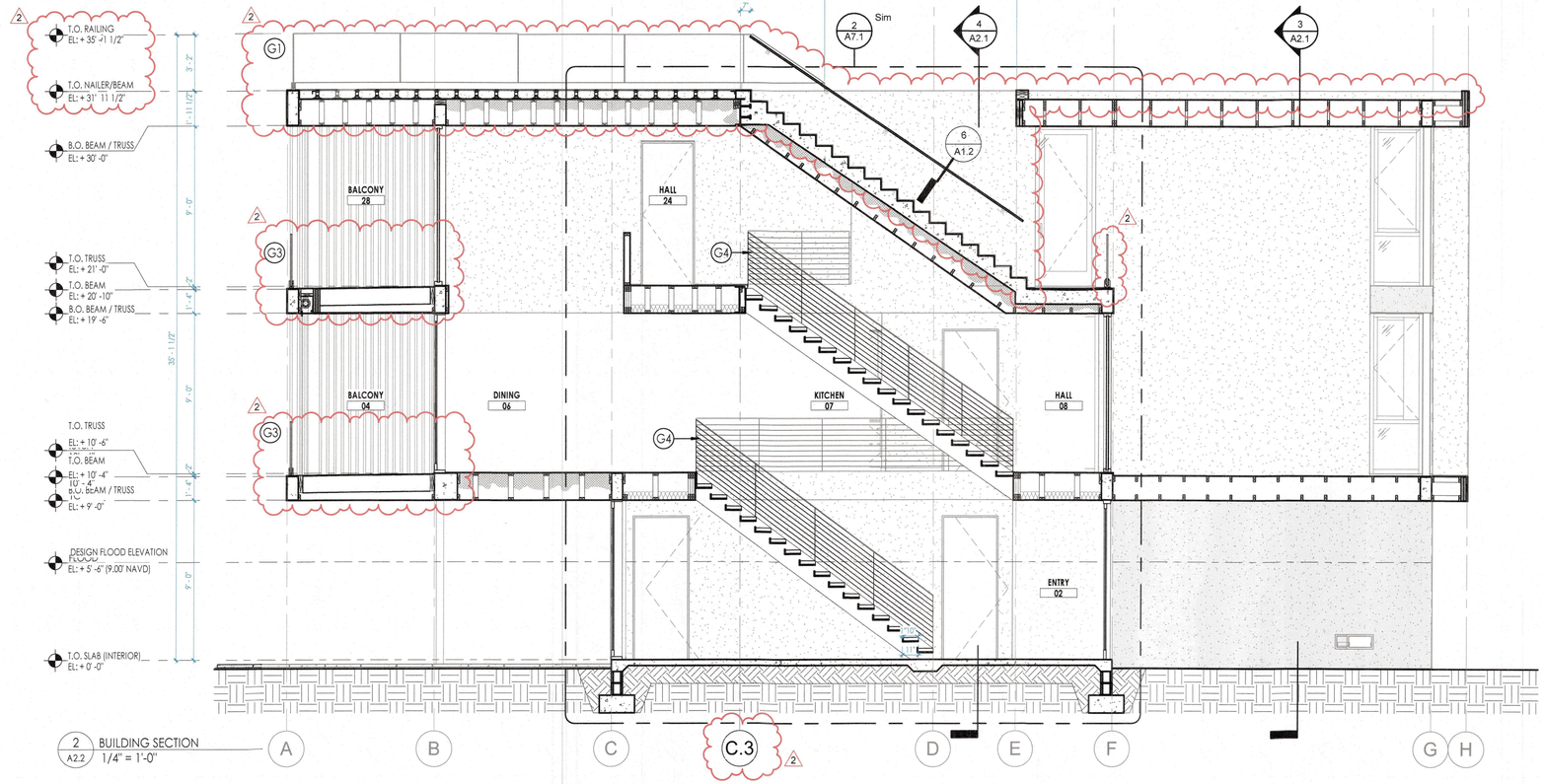

2 A2.2 BUILDING SECTION 1/4" = 1'-0"

KEY NOTES

1. LINE OF ROOF / STRUCTURE / CEILING / DOOR ABOVE.
2. COLUMN WRAPPED IN BRAKE METAL. SEE STRUCTURAL DWGS.
3. REMOVED 2
4. BRAKE METAL WRAP, AS REQ. SEE WINDOW DETAILS.
5. ELECTRICAL METER INSTALLED ABOVE D.F.E.
6. PRE-FABRICATED MAILBOX LOCATION. SEE SPECIFICATIONS.
7. REMOVED 2

GENERAL NOTES

1. SEE INTERIOR DESIGN PRODUCT SPECIFICATIONS FOR ALL PAINT COLORS AND WOOD STAINING.
2. SEE STRUCTURAL DRAWINGS FOR ALL STRUCTURAL ELEMENTS.
3. ALL GRID LINES ARE ALIGNED WITH TO THE FACE OF MASONRY WALLS SHOWN U.N.O.
4. PROPOSED POOL AND SPA ARE TO BE SUBMITTED UNDER A SEPARATE PERMIT.
5. SEE LANDSCAPE ARCHITECTS DRAWINGS FOR INFORMATION ON POOL, SPA AND HARDSCAPE SURFACES.
6. ALL DIMENSIONS ARE FROM FACE OF STRUCTURAL MEMBER U.N.O.
7. FINISH FLOOR ELEVATION OF 3.50' NAVD IS A MINIMUM 1'-6" ABOVE THE ADJACENT ROAD, AS REQUIRED.
8. ALL SPACES BELOW THE DESIGNATED BASE FLOOD ELEVATION (BFE) ARE NOT TO BE USED AS RECREATIONAL AREAS.

leader DESIGNSTUDIO
Leader Design Studio, LLC
FL-AR98232

1003 North Orange Ave., Suite A2
Sarasota, Florida 34326
O: (941) 404-8055

GENERAL CONTRACTOR
The Vision Group, LLC
1900 Main Street Suite 205
Sarasota, Florida 34228
O: (941) 357-4040

STRUCTURAL ENGINEER
Apex Consulting Engineers
4315 53rd Avenue East
Bradenton, Florida 34203
O: (941) 365-1900

ENERGY & SUSTAINABILITY CONSULTANTS
ESC, LLC
1348 Fruitville Road
Sarasota, Florida 34236
O: (941) 957-1100

INTERIOR DESIGNER
SAWA Design Studio
1003 North Orange Ave., Suite A2
Sarasota, Florida 34236
O: (941) 564-9291

MAJHER RESIDENCE

7017 Longboat Drive North
Longboat Key, 34228

Project number	LDS-2203
Date	04.27.2023
Drawn by	DM
Checked by	CL
Phase	PERMIT SET

SEAL

STATE OF FLORIDA · CHRISTOPHER R. LEADER · REGISTERED ARCHITECT · AR98232

"To the best of the Architect's or Engineer's knowledge, the plans and specifications comply with the applicable minimum building codes and applicable fire safety standards as determined by local authority in accordance with Chapter 553 and 663 of Florida Statutes."

Christopher Leader
AR 98232

REVISION

No.	Description	Date
1	BLDG. DEPT. COMMENTS	08/16/23
2	PEDESTAL SYSTEM	02/13/24

RECEIVED
APR 2 - 2024
TOWN OF LONGBOAT KEY
Planning, Zoning & Building

SHEET

BUILDING SECTIONS

A2.2

WINDOW & DOOR PROFILES

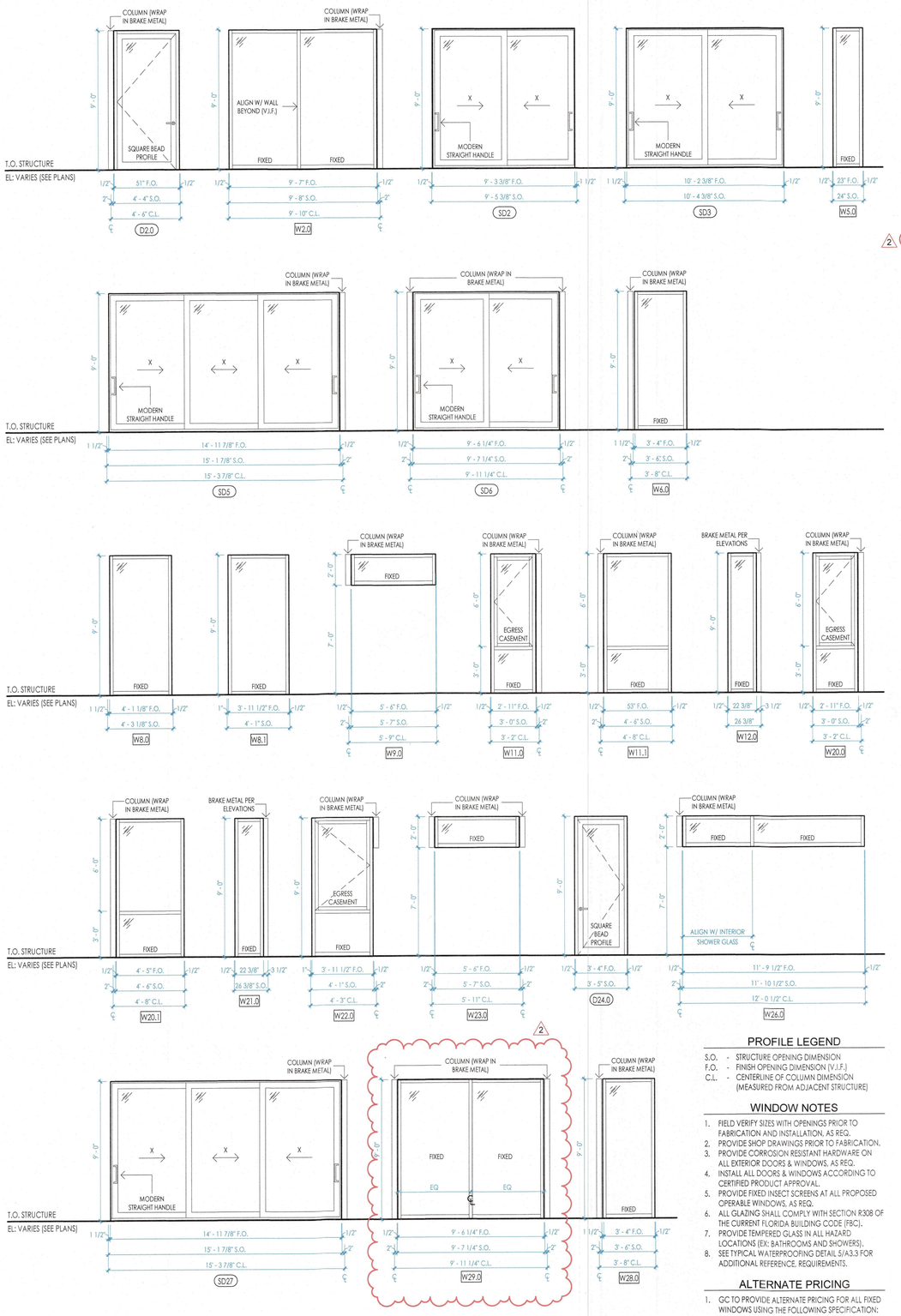

PROFILE LEGEND

S.O. - STRUCTURE OPENING DIMENSION
F.O. - FINISH OPENING DIMENSION (V.I.F.)
C.L. - CENTERLINE OF COLUMN DIMENSION (MEASURED FROM ADJACENT STRUCTURE)

WINDOW NOTES

1. FIELD VERIFY SIZES WITH OPENINGS PRIOR TO FABRICATION AND INSTALLATION. AS REQ.
2. PROVIDE SHOP DRAWINGS PRIOR TO FABRICATION.
3. PROVIDE CORROSION RESISTANT HARDWARE ON ALL EXTERIOR DOORS & WINDOWS, AS REQ.
4. INSTALL ALL DOORS & WINDOWS ACCORDING TO CERTIFIED PRODUCT APPROVAL.
5. PROVIDE FIXED INSECT SCREENS AT ALL PROPOSED OPERABLE WINDOWS, AS REQ.
6. ALL GLAZING SHALL COMPLY WITH SECTION R308 OF THE CURRENT FLORIDA BUILDING CODE (FBC).
7. PROVIDE TEMPERED GLASS IN ALL HAZARD LOCATIONS (EX: BATHROOMS AND SHOWERS).
8. SEE TYPICAL WATERPROOFING DETAIL S/A3.3 FOR ADDITIONAL REFERENCE, REQUIREMENTS.

ALTERNATE PRICING

1. GC TO PROVIDE ALTERNATE PRICING FOR ALL FIXED WINDOWS USING THE FOLLOWING SPECIFICATION:
   - ES WINDOWS, LLC - EL-150 (NOA 22-0105.01)

WINDOW SCHEDULE

KEY	ROOM NAME	UNIT SIZE		AREA	DETAILS				MFR	PRODUCT	APPROVAL	FINISH
		WIDTH	HEIGHT		HEAD	JAMB	JAMB	SILL				
W2.0	02 - ENTRY	SEE PROFILES		86 SF	--	--	--	--	ES WINDOWS	ES-8000T	NOA 20-1118.02	ARCADIA SILVER
W5.0	05 - LIVING	SEE PROFILES		18 SF	--	--	--	--	ES WINDOWS	ES-8000T	NOA 20-1118.02	ARCADIA SILVER
W6.0	06 - DINING	SEE PROFILES		31 SF	--	3/A1.3	--	--	ES WINDOWS	ES-8000T	NOA 20-1118.02	ARCADIA SILVER
W8.0	08 - HALL	SEE PROFILES		36 SF	--	--	--	--	ES WINDOWS	ES-8000T	NOA 20-1118.02	ARCADIA SILVER
W8.1	08 - HALL	SEE PROFILES		35 SF	--	--	--	--	ES WINDOWS	ES-8000T	NOA 20-1118.02	ARCADIA SILVER
W9.0	09 - POWDER	SEE PROFILES		11 SF	--	--	--	--	ES WINDOWS	ES-8000T	NOA 20-1118.02	ARCADIA SILVER
W11.0	11 - G. BEDROOM	SEE PROFILES		27 SF	--	--	--	--	ES WINDOWS	ES-P252	NOA 20-1118.05	ARCADIA SILVER
W11.1	11 - G. BEDROOM	SEE PROFILES		40 SF	--	--	--	--	ES WINDOWS	ES-8000T	NOA 20-1118.02	ARCADIA SILVER
W12.0	12 - G. BATH	SEE PROFILES		17 SF	--	--	--	--	ES WINDOWS	ES-8000T	NOA 20-1118.02	ARCADIA SILVER
W20.0	20 - G. BEDROOM	SEE PROFILES		27 SF	--	--	--	--	ES WINDOWS	ES-P252	NOA 20-1118.05	ARCADIA SILVER
W20.1	20 - G. BEDROOM	SEE PROFILES		40 SF	--	--	--	--	ES WINDOWS	ES-8000T	NOA 20-1118.02	ARCADIA SILVER
W21.0	20 - G. BATH	SEE PROFILES		17 SF	--	--	--	--	ES WINDOWS	ES-8000T	NOA 20-1118.02	ARCADIA SILVER
W22.0	22 - G. BEDROOM	SEE PROFILES		35 SF	--	--	--	--	ES WINDOWS	ES-P252	NOA 20-1118.05	ARCADIA SILVER
W23.0	23 - G. BATH	SEE PROFILES		11 SF	--	--	--	--	ES WINDOWS	ES-8000T	NOA 20-1118.02	ARCADIA SILVER
W26.0	26 - G. BATH	SEE PROFILES		24 SF	--	--	--	--	ES WINDOWS	ES-8000T	NOA 20-1118.02	ARCADIA SILVER
W28.0	28 - BALCONY	SEE PROFILES		31 SF	--	2/A1.4	--	--	ES WINDOWS	ES-8000T	NOA 20-1118.02	ARCADIA SILVER
W29.0	20 - G. BEDROOM	SEE PROFILES		85 SF					ES WINDOWS	ES-8000T	NOA 20-1118.02	ARCADIA SILVER

2

SLIDING GLASS DOOR SCHEDULE

KEY	ROOM NAME	UNIT SIZE		AREA	DETAILS				MFR	PRODUCT	APPROVAL	FINISH
		WIDTH	HEIGHT		HEAD	JAMB	JAMB	SILL				
SD2	03 - STORAGE	SEE PROFILES		64 SF	4/A3.1	2/A3.1	1/A3.1	10/A3.1	ES WINDOWS	SGD-2020	FL #22267-R9	ARCADIA SILVER
SD3	03 - STORAGE	SEE PROFILES		64 SF	4/A3.1	1/A3.1	2/A3.1	10/A3.1	ES WINDOWS	SGD-2020	FL #22267-R9	ARCADIA SILVER
SD5	05 - LIVING	SEE PROFILES		124 SF	6/A3.1	5/A1.3	4/A1.3	9/A3.1	ES WINDOWS	SGD-2020	FL #22267-R9	ARCADIA SILVER
SD6	06 - DINING	SEE PROFILES		124 SF	3/A3.1	4/A1.3	3/A1.3	9/A3.1	ES WINDOWS	SGD-2020	FL #22267-R9	ARCADIA SILVER
SD27	27 - M. BEDROOM	SEE PROFILES		123 SF	6/A3.1	4/A1.4	3/A1.4	9/A3.1	ES WINDOWS	SGD-2020	FL #22267-R9	ARCADIA SILVER

DOOR TYPES

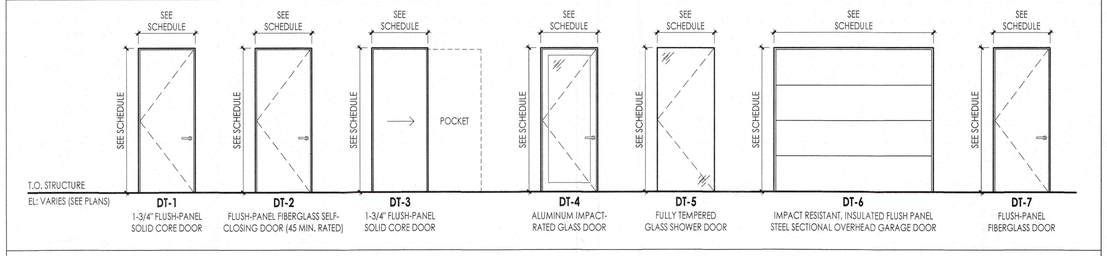

DOOR SCHEDULE

KEY	ROOM NAME	WIDTH	HEIGHT	DETAILS				TYPE	MFR	MODEL	APPROVAL	DH	FINISH
				HEAD	JAMB	JAMB	SILL						
D0.0	00 - ELEVATOR	3' - 0"	8' - 0"	--	--	--	--	DT-7	PLASTPRO	DRS0080	--	DH-2	PAINTED
D0.1	00 - ELEVATOR	3' - 0"	8' - 0"	--	--	--	--	DT-1	TRUSTILE	TMF1000	--	DH-2	PAINTED
D0.2	00 - ELEVATOR	3' - 0"	8' - 0"	--	--	--	--	DT-1	TRUSTILE	TMF1000	--	DH-2	PAINTED
D1.0	01 - GARAGE	18' - 0"	8' - 0"	--	--	--	--	DT-6	CLOPAY	--	NOA 20-0922.44	MFR	PAINTED
D1.1	01 - GARAGE	3' - 0"	8' - 0"	--	--	--	--	DT-2	PLASTPRO	DRS0080	--	DH-3	PAINTED
D1.2	01 - GARAGE	2' - 10"	8' - 0"	--	--	--	--	DT-7	PLASTPRO	DRS0080	FL 16094.7	DH-3	PAINTED
D2.0	02 - ENTRY	SEE PROFILES		8/A3.1	--	--	11/A3.1	DT-4	ES WINDOWS	ES-9000	NOA 22-0407.08	MFR	ARCADIA SILVER
D3.0	03 - STORAGE	3' - 0"	8' - 0"	--	--	--	--	DT-7	PLASTPRO	DRS0080	--	DH-2	PAINTED
D8.0	08 - HALL	2' - 8"	8' - 0"	--	--	--	--	DT-1	TRUSTILE	TMF1000	--	DH-6	PAINTED
D9.0	09 - POWDER	2' - 10"	8' - 0"	--	--	--	--	DT-1	TRUSTILE	TMF1000	--	DH-1	PAINTED
D10.0	11 - LAUNDRY	2' - 10"	8' - 0"	--	--	--	--	DT-1	TRUSTILE	TMF1000	--	DH-2 + 9	PAINTED
D11.0	12 - G. BEDROOM	4' - 2 1/2"	10' - 0"	--	--	--	--	DT-1	TRUSTILE	TMF1000	--	DH-4 + 5	PAINTED
D12.0	13 - G. BATH	2' - 10"	8' - 0"	--	--	--	--	DT-1	TRUSTILE	TMF1000	--	DH-1 + 9	PAINTED
D12.1	13 - G. BATH	2' - 10"	8' - 0"	--	--	--	--	DT-5	--	--	--	DH-7 + 8	GLASS
D20.0	20 - G. BEDROOM	2' - 10"	8' - 0"	--	--	--	--	DT-1	TRUSTILE	TMF1000	--	DH-1 + 9	PAINTED
D21.0	21 - G. BATH	2' - 10"	8' - 0"	--	--	--	--	DT-1	TRUSTILE	TMF1000	--	DH-1 + 9	PAINTED
D22.0	22 - G. BEDROOM	2' - 10"	8' - 0"	--	--	--	--	DT-1	TRUSTILE	TMF1000	--	DH-1 + 9	PAINTED
D23.0	23 - G. BATH	2' - 10"	8' - 0"	--	--	--	--	DT-1	TRUSTILE	TMF1000	--	DH-1 + 9	PAINTED
D24.0	24 - HALL	SEE PROFILES		--	--	--	--	DT-4	ES WINDOWS	ES-9000	NOA 22-0407.08	MFR	ARCADIA SILVER
D24.1	24 - HALL	2' - 6"	8' - 0"	--	--	--	--	DT-1	TRUSTILE	TMF1000	--	DH-6	PAINTED
D25.0	26 - G. BATH	2' - 10"	8' - 0"	--	--	--	--	DT-3	TRUSTILE	TMF1000	--	DH-1 + 9	PAINTED
D26.0	26 - G. BATH	2' - 10"	8' - 0"	--	--	--	--	DT-3	TRUSTILE	TMF1000	--	DH-1 + 9	PAINTED
D26.1	26 - G. BATH	2' - 10"	9' - 0"	--	--	--	--	DT-5	--	--	--	DH-7 + 8	GLASS
D26.2	26 - G. BATH	2' - 10"	9' - 0"	--	--	--	--	DT-5	--	--	--	DH-7 + 8	GLASS
D27.0	27 - M. BEDROOM	2' - 10"	8' - 0"	--	--	--	--	DT-1	TRUSTILE	TMF1000	--	DH-1 + 9	PAINTED

HARDWARE SCHEDULE

TAG	TYPE	MFR	PRODUCT	MODEL	FINISH	NOTES
DH-1	SWING	EMTEK	PRIVACY WITH SQUARE ROSETTE	5210	SATIN NICKEL - US15	--
DH-2	SWING	EMTEK	PASSAGE WITH SQUARE ROSETTE	5110	SATIN NICKEL - US15	--
DH-3	SWING	EMTEK	MODERN MULTI POINT LOCK TRIM (KEYED)	1.5" X 11"	SATIN NICKEL - US15	EURO 3-5/8" CENTER W/ HELIOS LEVER
DH-4	POCKET	AHI HARDWARE	PRIVACY - POCKET DOOR	SDK096PV	SATIN NICKEL	--
DH-5	POCKET	HAFELE	POCKET DOOR TRACK (350 LBS MAX DOOR)	HAWA 160B	ALUMINUM	PAINT TRACK POCKET TRACK BLACK
DH-6	TOUCH	SUGATSUNE	PUSH TO OPEN DOOR LATCH	ML-ZN80-WT	WHITE	ONE LATCH REQUIRED PER DOOR
DH-7	HINGE	C.R. LAURENCE	VIENNA HINGE	V1E337BN	BRUSHED NICKEL	--
DH-8	SWING	C.R. LAURENCE	BACK-TO-BACK E-Z GRIP STYLE KNOB	SDK140BN	BRUSHED NICKEL	--
DH-9	BUMPER	EMTEK	1-1/2" CYLINDER FLOOR BUMPER	2257	SATIN NICKEL - US15	--
--	--	--	--	--	--	--

leader DESIGN STUDIO

Leader Design Studio, LLC
FL-AR98232

1003 North Orange Ave., Suite A2
Sarasota, Florida 34326
O: (941) 404-8055

GENERAL CONTRACTOR
The Vision Group, LLC
1900 Main Street Suite 205
Sarasota, Florida 34228
O: (941) 357-4040

STRUCTURAL ENGINEER
Apex Consulting Engineers
4315 53rd Avenue East
Bradenton, Florida 34203
O: (941) 365-1900

ENERGY & SUSTAINABILITY CONSULTANTS
ESC, LLC
1348 Fruitville Road
Sarasota, Florida 34236
O: (941) 957-1100

INTERIOR DESIGNER
SAWA Design Studio
1003 North Orange Ave., Suite A2
Sarasota, Florida 34236
O: (941) 564-9291

MAJHER RESIDENCE

7017 Longboat Drive North
Longboat Key, 34228

Project number	LDS-2203
Date	04.27.2023
Drawn by	DM
Checked by	CL
Phase	PERMIT SET

SEAL

STATE OF FLORIDA · CHRISTOPHER R. LEADER · AR98232 · REGISTERED ARCHITECT

"To the best of the Architect's or Engineer's knowledge, the plans and specifications comply with the applicable minimum building codes and applicable fire safety standards as determined by local authority in accordance with Chapter 553 and 663 of Florida Statutes."

Christopher Leader
AR 98232

REVISION

No.	Description	Date
1	BLDG. DEPT. COMMENTS	08/16/23
2	PEDESTAL SYSTEM	02/13/24

SHEET

DOOR & WINDOW SCHEDULE

BLDG PERMIT PLANS FILE Copy of Record

RECEIVED
APR 2 - 2024
TOWN OF LONGBOAT KEY
Planning, Zoning & Building

A3.0

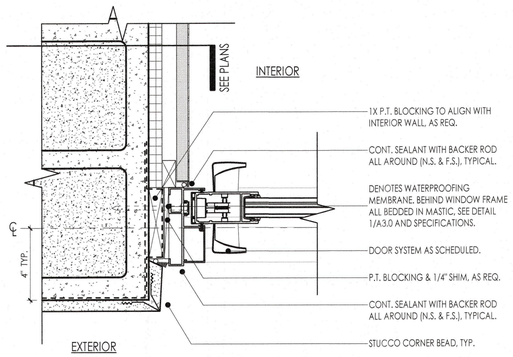

1 A3.1 DETAIL - 2-TRACK SLIDING DOOR JAMB
3" = 1'-0"

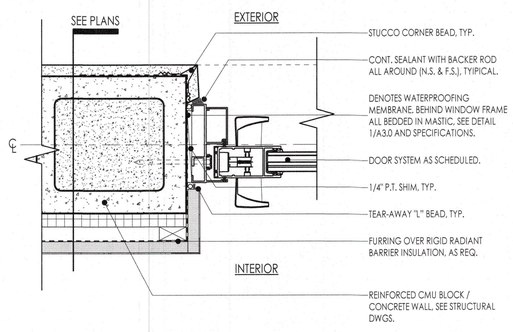

2 A3.1 DETAIL - 2-TRACK SLIDING DOOR JAMB
3" = 1'-0"

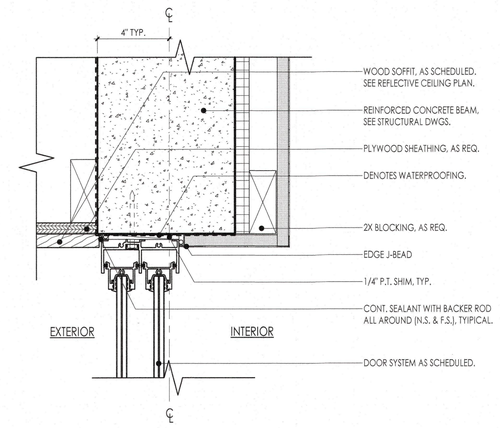

3 A3.1 DETAIL - 2-TRACK SLIDING DOOR HEAD
3" = 1'-0"

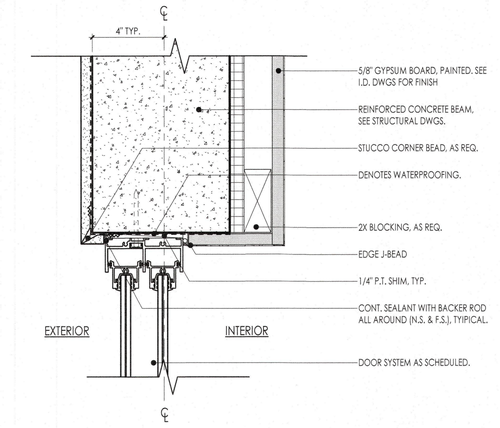

4 A3.1 DETAIL - 2-TRACK SLIDING DOOR HEAD
3" = 1'-0"

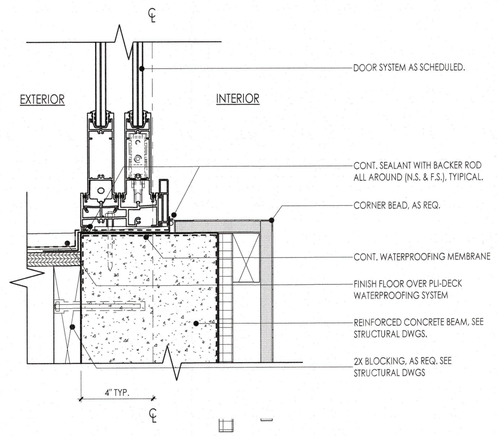

5 A3.1 DETAIL - 2-TRACK SLIDING DOOR SILL
3" = 1'-0"

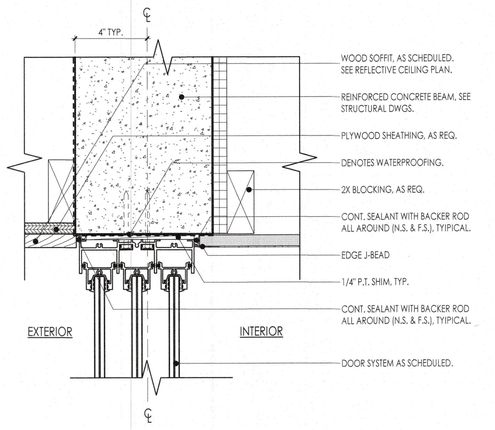

6 A3.1 DETAIL - 3-TRACK SLIDING DOOR HEAD
3" = 1'-0"

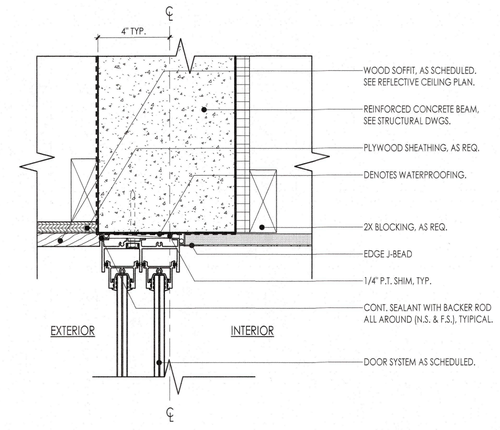

7 A3.1 DETAIL - 2-TRACK SLIDING DOOR HEAD
3" = 1'-0"

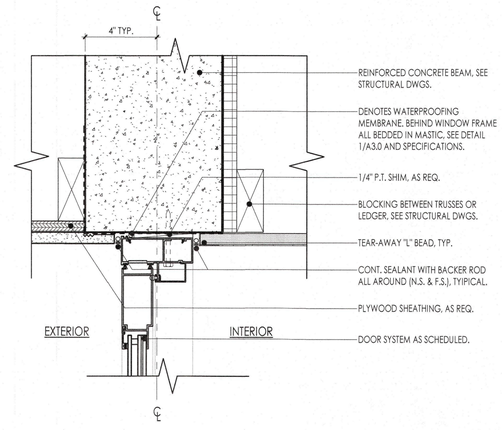

8 A3.1 DETAIL - STOREFRONT DOOR HEAD
3" = 1'-0"

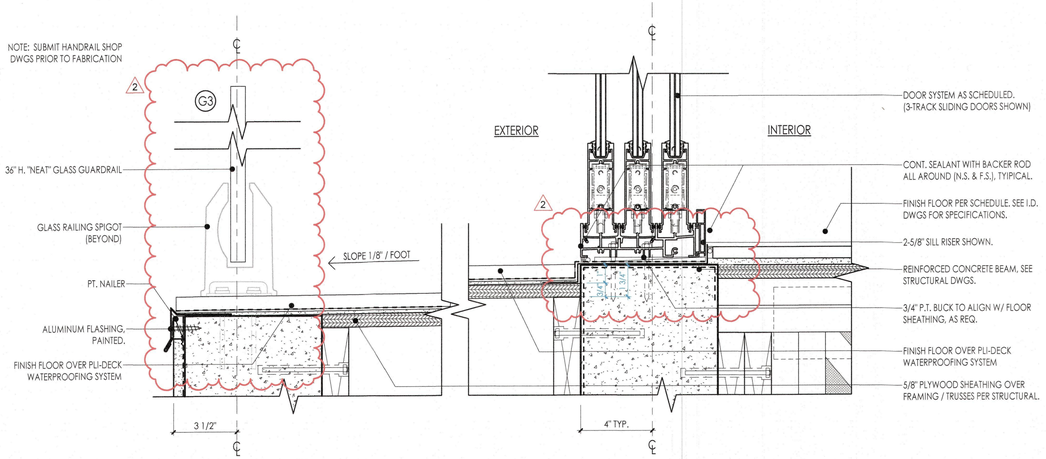

9 A3.1 DETAIL - 3-TRACK SLIDING DOOR SILL
3" = 1'-0"

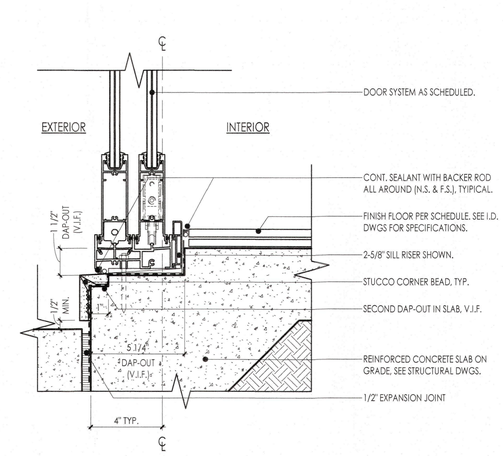

10 A3.1 DETAIL - 2-TRACK SLIDING DOOR SILL
3" = 1'-0"

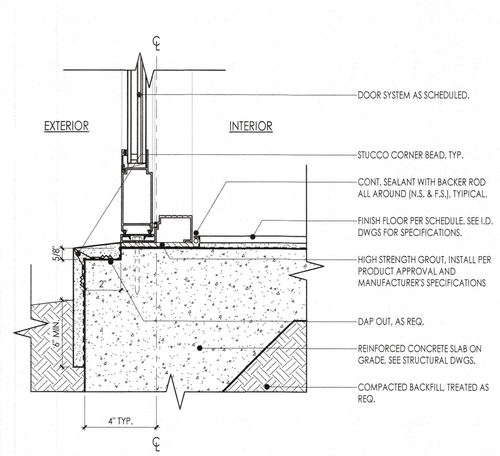

11 A3.1 DETAIL - STOREFRONT DOOR SILL
3" = 1'-0"

leader DESIGN STUDIO
Leader Design Studio, LLC
FL-AR98232

1003 North Orange Ave., Suite A2
Sarasota, Florida 34326
O: (941) 404-8055

GENERAL CONTRACTOR
The Vision Group, LLC
1900 Main Street Suite 205
Sarasota, Florida 34228
O: (941) 357-4040

STRUCTURAL ENGINEER
Apex Consulting Engineers
4315 53rd Avenue East
Bradenton, Florida 34203
O: (941) 365-1900

ENERGY & SUSTAINABILITY CONSULTANTS
ESC, LLC
1348 Fruitville Road
Sarasota, Florida 34236
O: (941) 957-1100

INTERIOR DESIGNER
SAWA Design Studio
1003 North Orange Ave., Suite A2
Sarasota, Florida 34236
O: (941) 564-9291

MAJHER RESIDENCE

7017 Longboat Drive North
Longboat Key, 34228

Project number	LDS-2203
Date	04.27.2023
Drawn by	DM
Checked by	CL
Phase	PERMIT SET

SEAL

STATE OF FLORIDA · CHRISTOPHER R. LEADER · REGISTERED ARCHITECT · AR98232

"To the best of the Architect's or Engineer's knowledge, the plans and specifications comply with the applicable minimum building codes and applicable fire safety standards as determined by local authority in accordance with Chapter 553 and 663 of Florida Statutes."

Christopher Leader
AR 98232

REVISION

No.	Description	Date
1	BLDG. DEPT. COMMENTS	08/16/23
2	PEDESTAL SYSTEM	02/13/24

BLDG PERMIT PLANS FILE Copy of Record

RECEIVED
APR 2 - 2024
TOWN OF LONGBOAT KEY
Planning, Zoning & Building

SHEET
DOOR & WINDOW DETAILS

A3.1

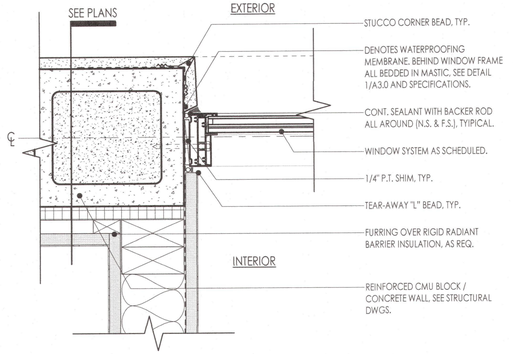

1 A3.2 DETAIL - WINDOW JAMB (STUCCO FINISH)
3" = 1'-0"

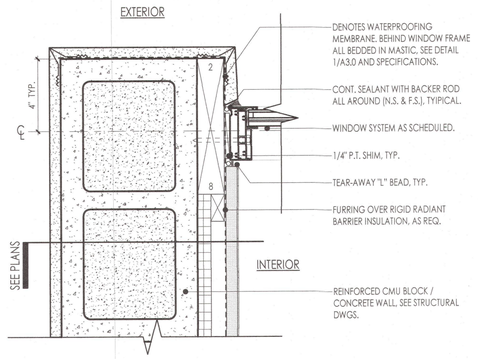

2 A3.2 DETAIL - WINDOW JAMB (STUCCO FINISH)
3" = 1'-0"

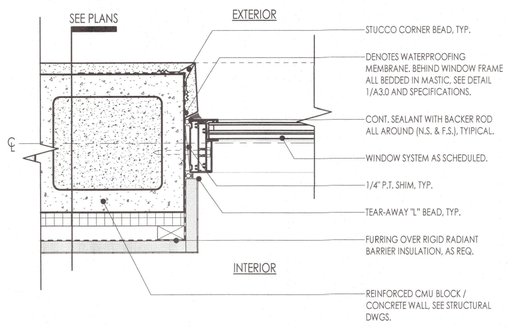

3 A3.2 DETAIL - WINDOW JAMB (STUCCO FINISH)
3" = 1'-0"

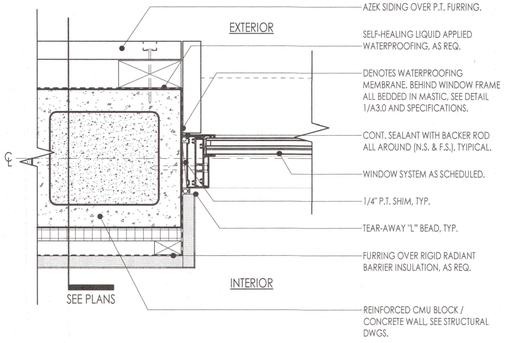

4 A3.2 DETAIL - WINDOW JAMB (SIDING FINISH)
3" = 1'-0"

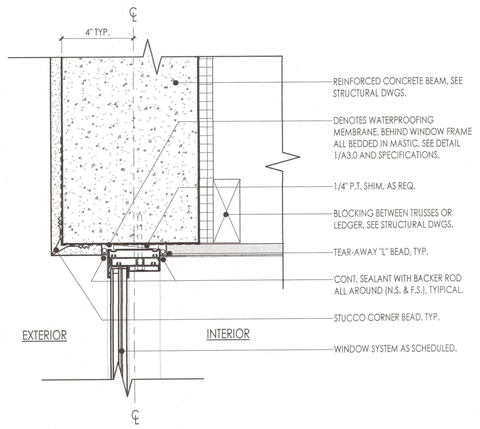

5 A3.2 DETAIL - WINDOW HEAD (STUCCO FINISH)
3" = 1'-0"

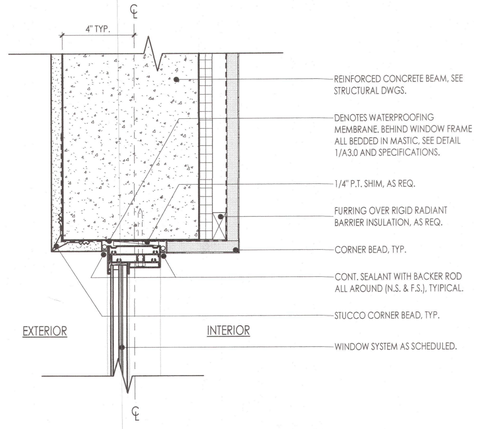

6 A3.2 DETAIL - WINDOW HEAD (STUCCO FINISH)
3" = 1'-0"

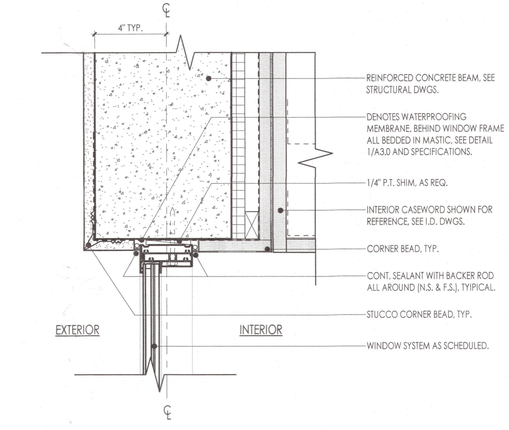

7 A3.2 DETAIL - WINDOW HEAD (STUCCO FINISH)
3" = 1'-0"

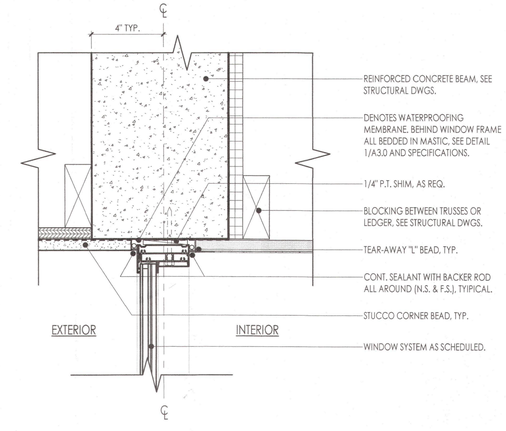

8 A3.2 DETAIL - WINDOW HEAD (STUCCO FINISH)
3" = 1'-0"

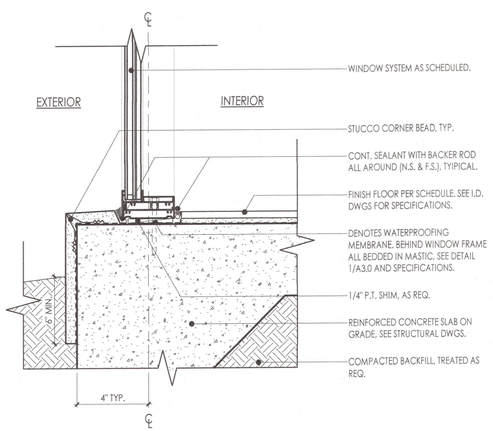

9 A3.2 DETAIL - WINDOW SILL (STUCCO FINISH)
3" = 1'-0"

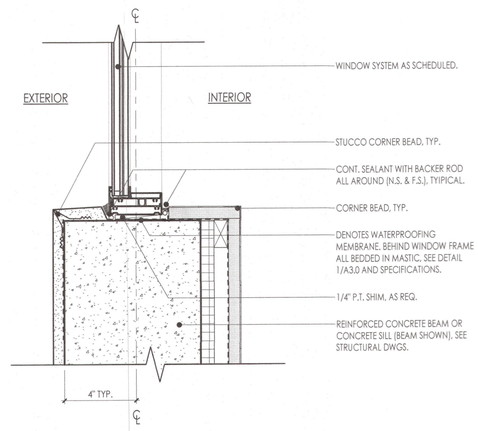

10 A3.2 DETAIL - WINDOW SILL (STUCCO FINISH)
3" = 1'-0"

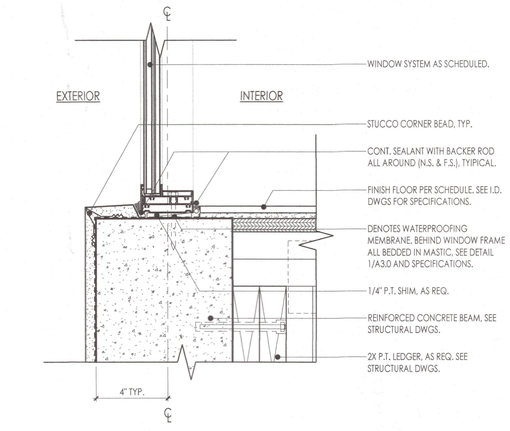

11 A3.2 DETAIL - WINDOW SILL (STUCCO FINISH)
3" = 1'-0"

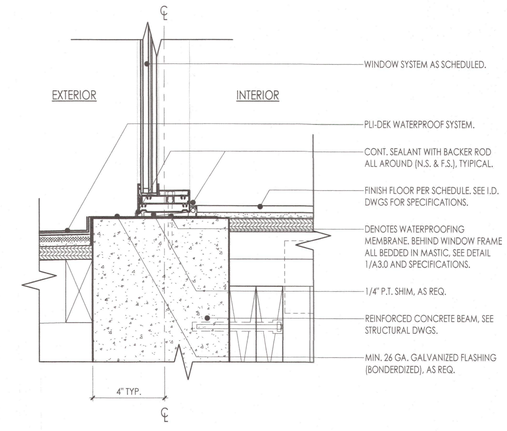

12 A3.2 DETAIL - WINDOW SILL (PLI-DEK FINISH)
3" = 1'-0"

leader DESIGNSTUDIO
Leader Design Studio, LLC
FL-AR98232

1003 North Orange Ave., Suite A2
Sarasota, Florida 34326
O: (941) 404-8055

GENERAL CONTRACTOR
The Vision Group, LLC
1900 Main Street Suite 205
Sarasota, Florida 34228
O: (941) 357-4040

STRUCTURAL ENGINEER
Apex Consulting Engineers
4315 53rd Avenue East
Bradenton, Florida 34203
O: (941) 365-1900

ENERGY & SUSTAINABILITY CONSULTANTS
ESC, LLC
1348 Fruitville Road
Sarasota, Florida 34236
O: (941) 957-1100

INTERIOR DESIGNER
SAWA Design Studio
1003 North Orange Ave., Suite A2
Sarasota, Florida 34236
O: (941) 564-9291

MAJHER RESIDENCE

7017 Longboat Drive North
Longboat Key, 34228

Project number	LDS-2203
Date	04.27.2023
Drawn by	DM
Checked by	CL
Phase	PERMIT SET

SEAL

STATE OF FLORIDA · CHRISTOPHER R. LEADER · AR98232 · REGISTERED ARCHITECT

"To the best of the Architect's or Engineer's knowledge, the plans and specifications comply with the applicable minimum building codes and applicable fire safety standards as determined by local authority in accordance with Chapter 553 and 663 of Florida Statutes."

Christopher Leader
AR 98232

REVISION

No.	Description	Date

BLDG PERMIT PLANS
FILE
Copy of Record

RECEIVED
SEP 14 2023
TOWN OF LONGBOAT KEY
Planning, Zoning & Building

SHEET
DOOR & WINDOW DETAILS

A3.2

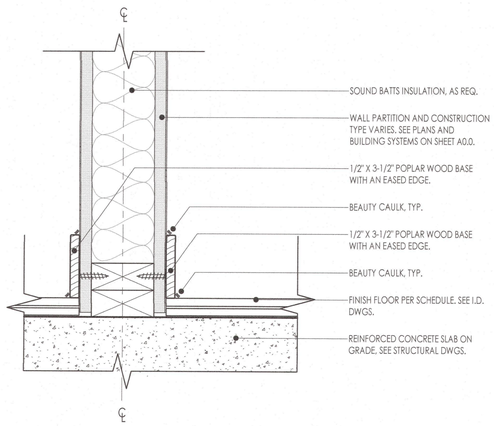

1 A3.3 DETAIL - TYPICAL WALL BASE
3" = 1'-0"

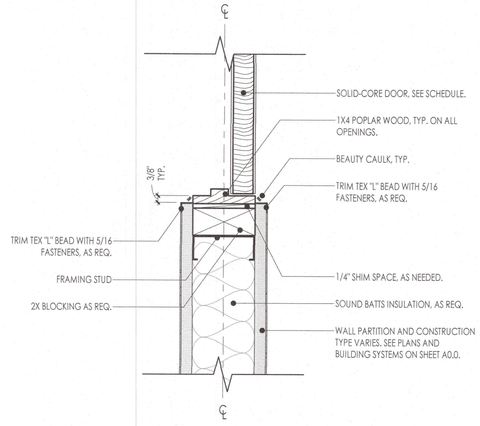

2 A3.3 DETAIL - TYPICAL DOOR HEAD / JAMB
3" = 1'-0"

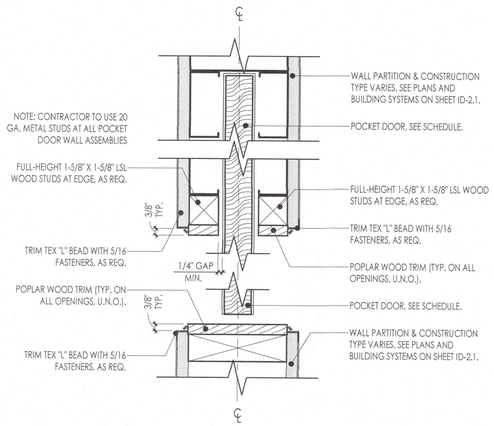

3 A3.3 DETAIL - FEILD FRAMED POCKET DOOR JAMB
3" = 1'-0"

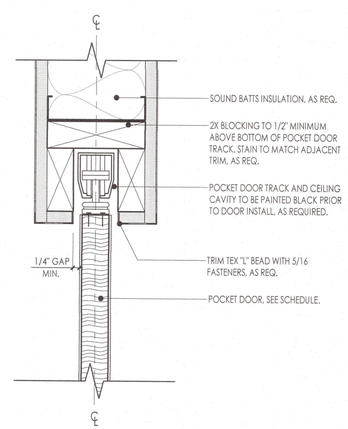

4 A3.3 DETAIL - FEILD FRAMED POCKET DOOR HEAD
3" = 1'-0"

NOT USED

NOT USED

NOT USED

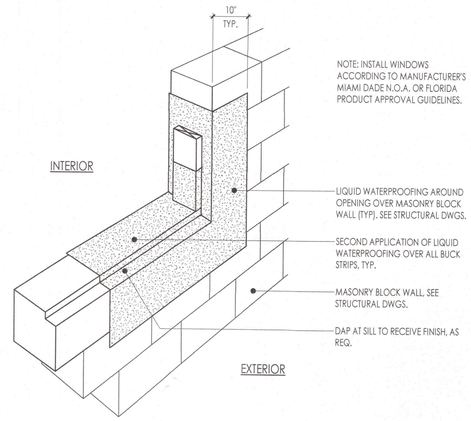

5 A3.3 DETAIL - TYPICAL WINDOW WATERPROOFING
3" = 1'-0"

NOT USED

NOT USED

NOT USED

NOT USED

NOT USED

leader DESIGNSTUDIO
Leader Design Studio, LLC
FL-AR98232

1003 North Orange Ave., Suite A2
Sarasota, Florida 34326
O: (941) 404-8055

GENERAL CONTRACTOR
The Vision Group, LLC
1900 Main Street Suite 205
Sarasota, Florida 34228
O: (941) 357-4040

STRUCTURAL ENGINEER
Apex Consulting Engineers
4315 53rd Avenue East
Bradenton, Florida 34203
O: (941) 365-1900

ENERGY & SUSTAINABILITY CONSULTANTS
ESC, LLC
1348 Fruitville Road
Sarasota, Florida 34236
O: (941) 957-1100

INTERIOR DESIGNER
SAWA Design Studio
1003 North Orange Ave., Suite A2
Sarasota, Florida 34236
O: (941) 564-9291

MAJHER RESIDENCE

7017 Longboat Drive North
Longboat Key, 34228

Project number	LDS-2203
Date	04.27.2023
Drawn by	DM
Checked by	CL
Phase	PERMIT SET

SEAL



"To the best of the Architect's or Engineer's knowledge, the plans and specifications comply with the applicable minimum building codes and applicable fire safety standards as determined by local authority in accordance with Chapter 553 and 663 of Florida Statutes."

Christopher Leader
AR 98232

REVISION

No.	Description	Date

BLDG PERMIT PLANS
FILE
Copy of Record

RECEIVED
SEP 14 2023
TOWN OF LONGBOAT KEY
Planning, Zoning & Building

SHEET
DOOR & WINDOW DETAILS

A3.3

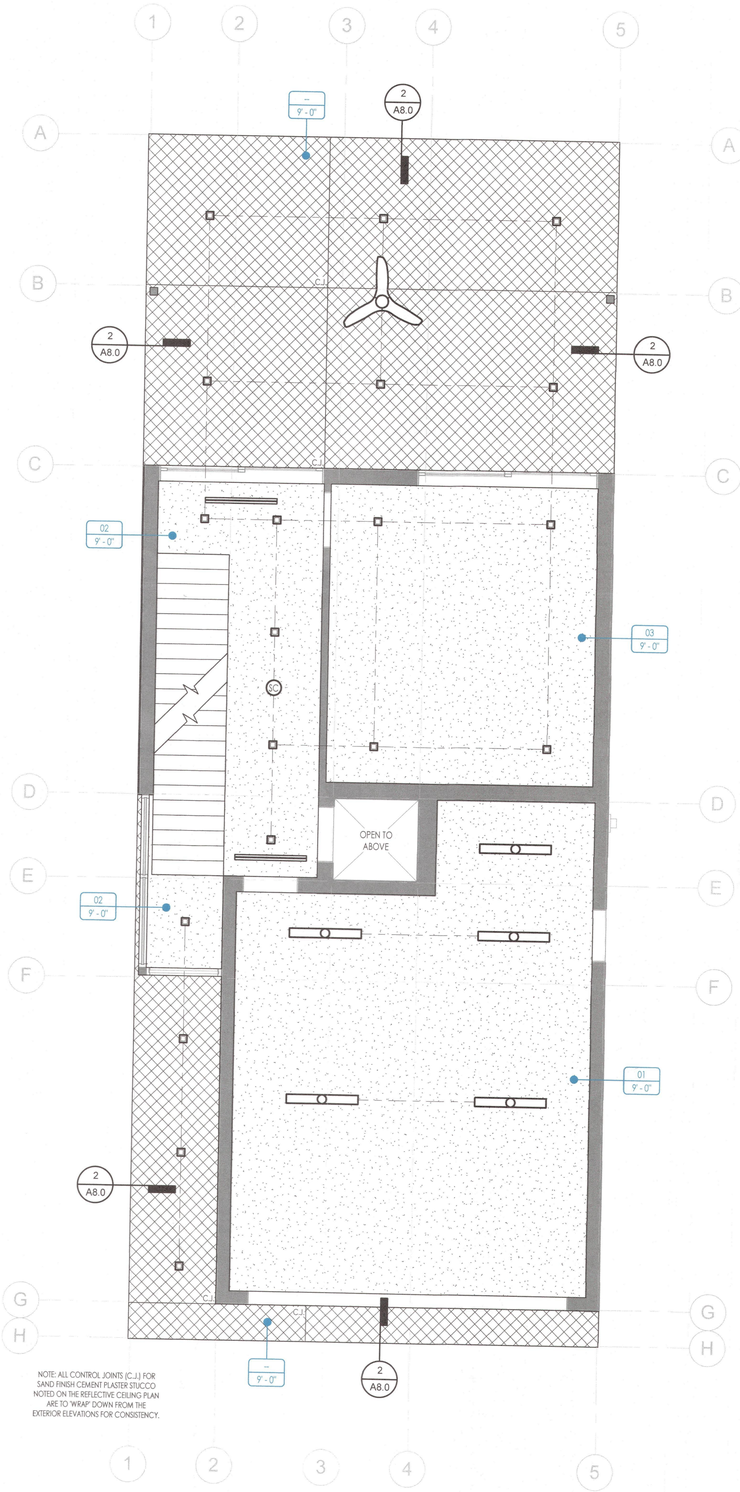

2 A4.0 REFLECTIVE CEILING PLAN - GROUND FLOOR
1/4" = 1'-0"

FIXTURE LEGEND

	CEILING MOUNTED LIGHT FIXTURE
	RECESSED LIGHT FIXTURE
	RECESSED ADJUSTABLE LIGHT FIXTURE
P	PENDANT FIXTURE
	GARAGE DOOR OPENER, CEILING MOUNTED
	4' 2-TUBE SURFACE MOUNT FLUORESCENT LIGHT FIXTURE
	STRIP LIGHT
	RECESSED STEP LIGHT FIXTURE
	EXHAUST FAN
	EXTERIOR WALL MOUNTED LIGHT FIXTURE
	INTERIOR WALL MOUNTED LIGHT FIXTURE
	DRAPE
	CEILING FAN (PROVIDE RHEOSTAT AS RECOMMENDED)
SC	SMOKE & CARBON MONOXIDE DETECTOR
SD	SMOKE DETECTOR
S	RECESSED PREWIRE SHADE
	HVAC REGISTERS PER MECHANICAL DWGS.

FINISH MATERIALS

CLG-1
- 5/8" GYPSUM BOARD CEILING, PAINTED.

CLG-2
- 5/8" SAND SMOOTH CEMENT PLASTER, PAINTED PRIMARY EXTERIOR COLOR. SEE I.D. DWGS.
- 1/2" SHEATHING OR WIRE LATH

CLG-3
- 5/8" SAND SMOOTH CEMENT PLASTER, PAINTED ACCENT EXTERIOR COLOR. SEE I.D. DWGS.
- 1/2" SHEATHING OR WIRE LATH

CLG-4
- 1X6 T&G SELECT CYPRESS W/ 1/4" SQUARE JOINT, STAINED & SEALED, SEE I.D. DWGS.
- 1/2" SHEATHING, AS REQ.

GRAPHIC SYMBOLS

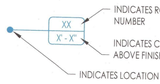

NOTE: OTHER THAN 01-GARAGE - CEILING HEIGHT DESIGNATION ABOVE FINISH FLOOR IS SPECIFIC TO THE ROOM THE CEILING IS LOCATED.

REFLECTIVE CEILING NOTES

1. SEE ELECTRICAL AND MECHANICAL DRAWINGS AND SPECIFICATIONS FOR ALL FIXTURE SELECTIONS.
2. ALL MATERIAL FINISH HATCH PATTERNS INDICATE EXTENTS OF MATERIAL ONLY AND IS NOT ILLUSTRATIVE OF THE PATTERNING OR ORIENTATION OF MATERIALS, U.N.O.
3. SEE INTERIOR DESIGN PRODUCT SPECIFICATIONS FOR ALL PAINT COLORS AND WOOD STAINING NOTED.
4. ALL CEILING/SOFFIT HEIGHTS LISTED ARE DESIGNATED ABOVE THE FINISH FLOOR (A.F.F.) SPECIFIC TO THE ROOM IT IS LOCATED.
5. CONTRACTOR TO COORDINATE ALL CEILING ELEVATIONS WITH FINISH SCHEDULES AND WALL SECTIONS, AS REQ.
6. REFER TO SECTION AND DETAIL SHEETS FOR ALL OTHER CEILING CONSTRUCTION INFORMATION.
7. CONTRACTOR TO PROVIDE ALL ACCESS PANELS, AS APPLICABLE TO LIGHT FIXTURES AND DRIVERS AS REQUIRED PER ELECTRICAL DRAWINGS. ALL ACCESS PANEL LOCATIONS TO BE VERIFIED WITH ARCHITECT AND INTERIOR DESIGNER PRIOR TO CONSTRUCTION, FABRICATION AND/OR ORDERING OF COMPONENTS.
8. WHERE CEILING HEIGHT IS REPLACED WITH THE WORD "SLOPE," REFER TO EXTERIOR ELEVATIONS AND BUILDING SECTIONS TO ACCOUNT FOR APPLICABLE CEILING SLOPE/PITCH.

leader DESIGNSTUDIO
Leader Design Studio, LLC
FL-AR98232

1003 North Orange Ave., Suite A2
Sarasota, Florida 34326
O: (941) 404-8055

GENERAL CONTRACTOR
The Vision Group, LLC
1900 Main Street Suite 205
Sarasota, Florida 34228
O: (941) 357-4040

STRUCTURAL ENGINEER
Apex Consulting Engineers
4315 53rd Avenue East
Bradenton, Florida 34203
O: (941) 365-1900

ENERGY & SUSTAINABILITY CONSULTANTS
ESC, LLC
1348 Fruitville Road
Sarasota, Florida 34236
O: (941) 957-1100

INTERIOR DESIGNER
SAWA Design Studio
1003 North Orange Ave., Suite A2
Sarasota, Florida 34236
O: (941) 564-9291

MAJHER RESIDENCE

7017 Longboat Drive North
Longboat Key, 34228

Project number	LDS-2203
Date	04.27.2023
Drawn by	DM
Checked by	CL
Phase	PERMIT SET

SEAL

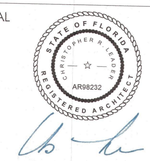

"To the best of the Architect's or Engineer's knowledge, the plans and specifications comply with the applicable minimum building codes and applicable fire safety standards as determined by local authority in accordance with Chapter 553 and 663 of Florida Statutes."

Christopher Leader
AR 98232

REVISION

No.	Description	Date

BLDG PERMIT PLANS
FILE
Copy of Record

SEP 14 2023
TOWN OF LONGBOAT KEY
Planning, Zoning & Building

SHEET

REFLECTIVE CEILING PLANS

A4.0

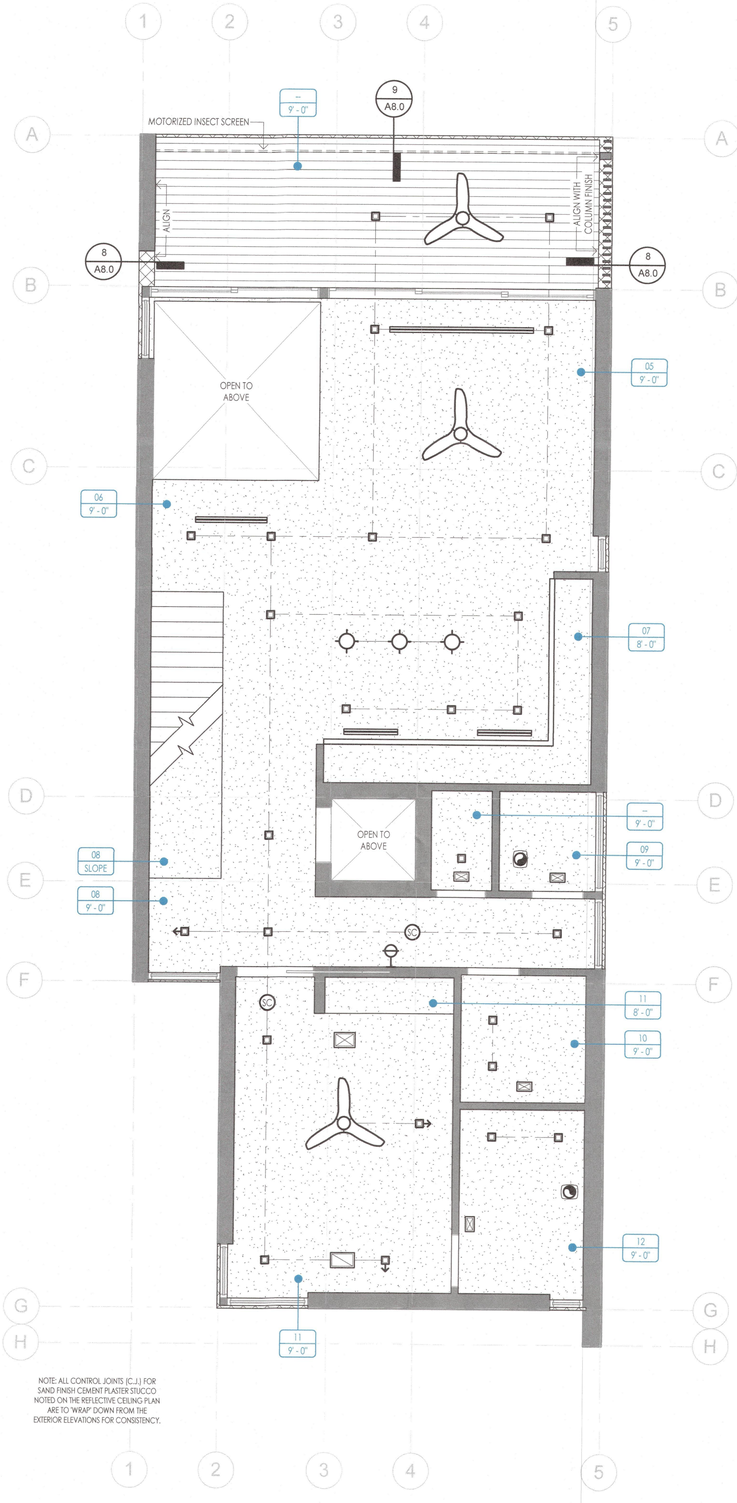

NOTE: ALL CONTROL JOINTS (C.J.) FOR SAND FINISH CEMENT PLASTER STUCCO NOTED ON THE REFLECTIVE CEILING PLAN ARE TO 'WRAP' DOWN FROM THE EXTERIOR ELEVATIONS FOR CONSISTENCY.

1 A4.1 REFLECTIVE CEILING PLAN - FIRST FLOOR
1/4" = 1'-0"

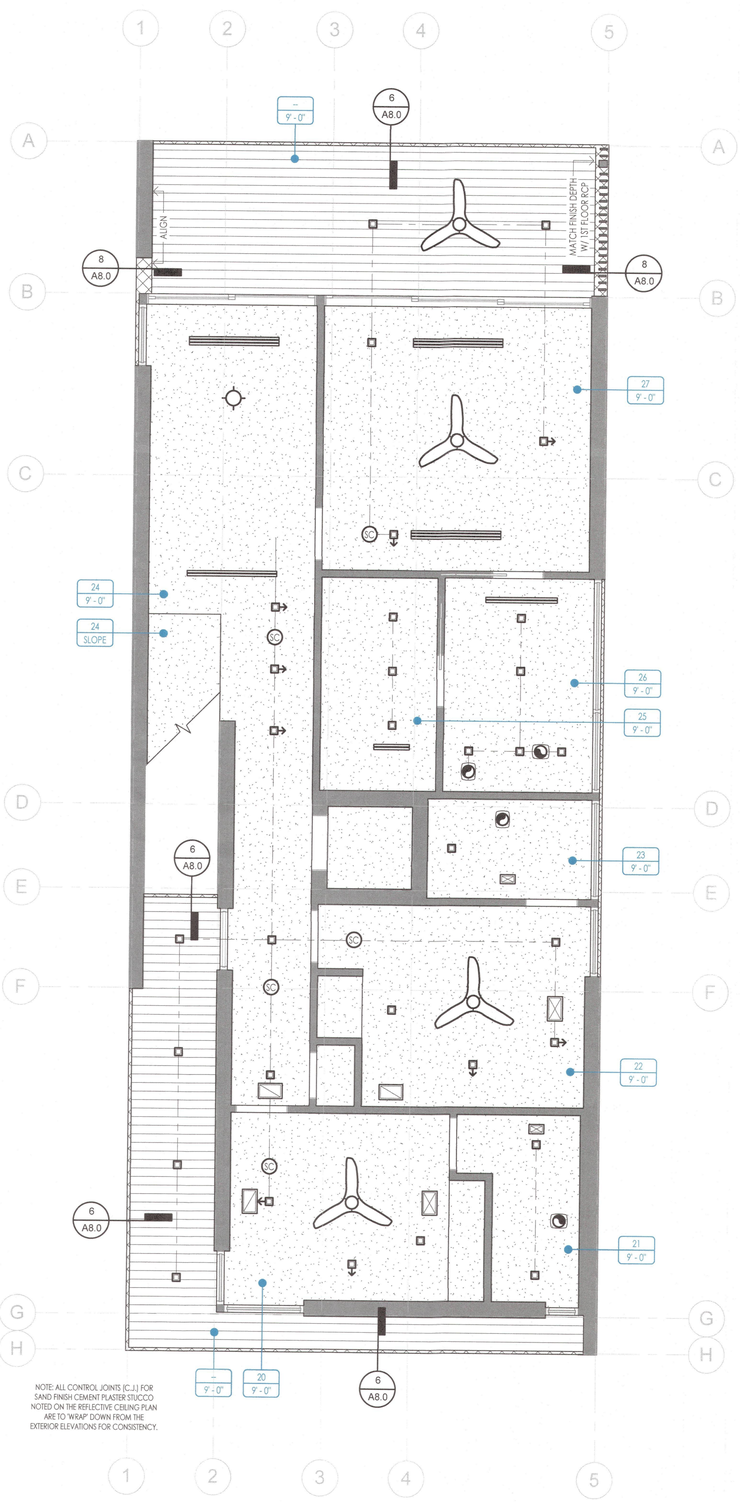

NOTE: ALL CONTROL JOINTS (C.J.) FOR SAND FINISH CEMENT PLASTER STUCCO NOTED ON THE REFLECTIVE CEILING PLAN ARE TO 'WRAP' DOWN FROM THE EXTERIOR ELEVATIONS FOR CONSISTENCY.

2 A4.1 REFLECTIVE CEILING PLAN - SECOND FLOOR
1/4" = 1'-0"

FIXTURE LEGEND

	CEILING MOUNTED LIGHT FIXTURE
	RECESSED LIGHT FIXTURE
	RECESSED ADJUSTABLE LIGHT FIXTURE
	PENDANT FIXTURE
	GARAGE DOOR OPENER, CEILING MOUNTED
	4' 2-TUBE SURFACE MOUNT FLUORESCENT LIGHT FIXTURE
	STRIP LIGHT
	RECESSED STEP LIGHT FIXTURE
	EXHAUST FAN
	EXTERIOR WALL MOUNTED LIGHT FIXTURE
	INTERIOR WALL MOUNTED LIGHT FIXTURE
	DRAPE
	CEILING FAN (PROVIDE RHEOSTAT AS RECOMMENDED)
SC	SMOKE & CARBON MONOXIDE DETECTOR
SD	SMOKE DETECTOR
S	RECESSED PREWIRE SHADE
	HVAC REGISTERS PER MECHANICAL DWGS.

FINISH MATERIALS

CLG-1
- 5/8" GYPSUM BOARD CEILING, PAINTED.

CLG-2
- 5/8" SAND SMOOTH CEMENT PLASTER, PAINTED PRIMARY EXTERIOR COLOR. SEE I.D. DWGS.
- 1/2" SHEATHING OR WIRE LATH

CLG-3
- 5/8" SAND SMOOTH CEMENT PLASTER, PAINTED ACCENT EXTERIOR COLOR. SEE I.D. DWGS.
- 1/2" SHEATHING OR WIRE LATH

CLG-4
- 1X6 T&G SELECT CYPRESS W/ 1/4" SQUARE JOINT, STAINED & SEALED. SEE I.D. DWGS.
- 1/2" SHEATHING, AS REQ.

GRAPHIC SYMBOLS



NOTE: OTHER THAN 01-GARAGE - CEILING HEIGHT DESIGNATION ABOVE FINISH FLOOR IS SPECIFIC TO THE ROOM THE CEILING IS LOCATED.

REFLECTIVE CEILING NOTES

1. SEE ELECTRICAL AND MECHANICAL DRAWINGS AND SPECIFICATIONS FOR ALL FIXTURE SELECTIONS.
2. ALL MATERIAL FINISH HATCH PATTERNS INDICATE EXTENTS OF MATERIAL ONLY AND IS NOT ILLUSTRATIVE OF THE PATTERNING OR ORIENTATION OF MATERIALS, U.N.O.
3. SEE INTERIOR DESIGN PRODUCT SPECIFICATIONS FOR ALL PAINT COLORS AND WOOD STAINING NOTED.
4. ALL CEILING/SOFFIT HEIGHTS LISTED ARE DESIGNATED ABOVE THE FINISH FLOOR (A.F.F.) SPECIFIC TO THE ROOM IT IS LOCATED.
5. CONTRACTOR TO COORDINATE ALL CEILING ELEVATIONS WITH FINISH SCHEDULES AND WALL SECTIONS, AS REQ.
6. REFER TO SECTION AND DETAIL SHEETS FOR ALL OTHER CEILING CONSTRUCTION INFORMATION.
7. CONTRACTOR TO PROVIDE ALL ACCESS PANELS, AS APPLICABLE TO LIGHT FIXTURES AND DRIVERS AS REQUIRED PER ELECTRICAL DRAWINGS. ALL ACCESS PANEL LOCATIONS TO BE VERIFIED WITH ARCHITECT AND INTERIOR DESIGNER PRIOR TO CONSTRUCTION, FABRICATION AND/OR ORDERING OF COMPONENTS.
8. WHERE CEILING HEIGHT IS REPLACED WITH THE WORD "SLOPE," REFER TO EXTERIOR ELEVATIONS AND BUILDING SECTIONS TO ACCOUNT FOR APPLICABLE CEILING SLOPE/PITCH.

leader DESIGNSTUDIO
Leader Design Studio, LLC
FL-AR98232

1003 North Orange Ave., Suite A2
Sarasota, Florida 34326
O: (941) 404-8055

GENERAL CONTRACTOR
The Vision Group, LLC
1900 Main Street Suite 205
Sarasota, Florida 34228
O: (941) 357-4040

STRUCTURAL ENGINEER
Apex Consulting Engineers
4315 53rd Avenue East
Bradenton, Florida 34203
O: (941) 365-1900

ENERGY & SUSTAINABILITY CONSULTANTS
ESC, LLC
1348 Fruitville Road
Sarasota, Florida 34236
O: (941) 957-1100

INTERIOR DESIGNER
SAWA Design Studio
1003 North Orange Ave., Suite A2
Sarasota, Florida 34236
O: (941) 564-9291

MAJHER RESIDENCE

7017 Longboat Drive North
Longboat Key, 34228

Project number	LDS-2203
Date	04.27.2023
Drawn by	DM
Checked by	CL
Phase	PERMIT SET

SEAL

STATE OF FLORIDA · CHRISTOPHER A. LEADER · AR98232 · REGISTERED ARCHITECT

"To the best of the Architect's or Engineer's knowledge, the plans and specifications comply with the applicable minimum building codes and applicable fire safety standards as determined by local authority in accordance with Chapter 553 and 663 of Florida Statutes."

Christopher Leader
AR 98232

REVISION

No.	Description	Date

BLDG PERMIT PLANS
FILE
Copy of Record

SHEET

REFLECTIVE CEILING PLANS

RECEIVED
SEP 14 2023
TOWN OF LONGBOAT KEY
Planning, Zoning & Building

A4.1

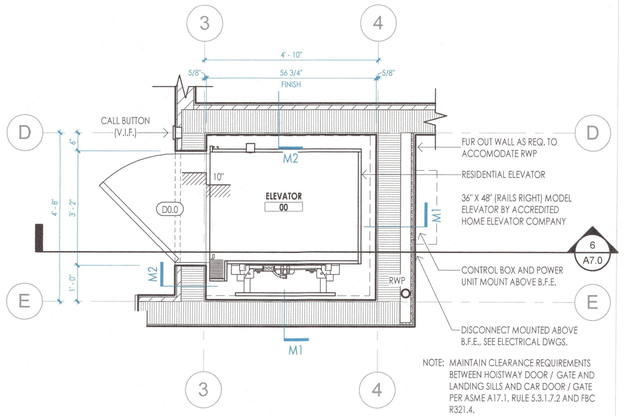

NOTE: MAINTAIN CLEARANCE REQUIREMENTS BETWEEN HOISTWAY DOOR / GATE AND LANDING SILLS AND CAR DOOR / GATE PER ASME A17.1, RULE 5.3.1.7.2 AND FBC R321.4.

NOTE: ELEVATOR COMPONENTS SHALL BE CONSTRUCTED OF FLOOD-RESISTANT MATERIALS AND DESIGNED TO RESIST PHYSICAL DAMAGE DURING FLOODING, AS REQUIRED PER ASCE 24. ELEVATOR TO ALSO BE EQUIPPED WITH CONTROLS THAT PREVENT THE CAB FROM DESCENDING INTO FLOODWATERS PER FBC 2020 - R322.1.6 AND FEMA TECH BULLETIN NO. 4

1 A7.0 ENLARGED PLAN - ELEVATOR (GROUND FLOOR)
1/2" = 1'-0"

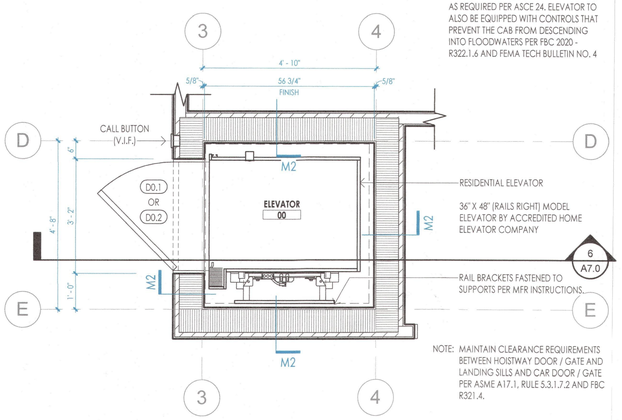

NOTE: MAINTAIN CLEARANCE REQUIREMENTS BETWEEN HOISTWAY DOOR / GATE AND LANDING SILLS AND CAR DOOR / GATE PER ASME A17.1, RULE 5.3.1.7.2 AND FBC R321.4.

2 A7.0 ENLARGED PLAN - ELEVATOR (FIRST + SECOND FLOOR)
1/2" = 1'-0"

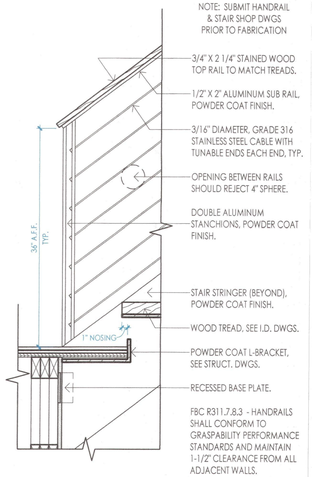

4 A7.0 DETAIL - INTERIOR TREAD & HANDRAIL
1" = 1'-0"

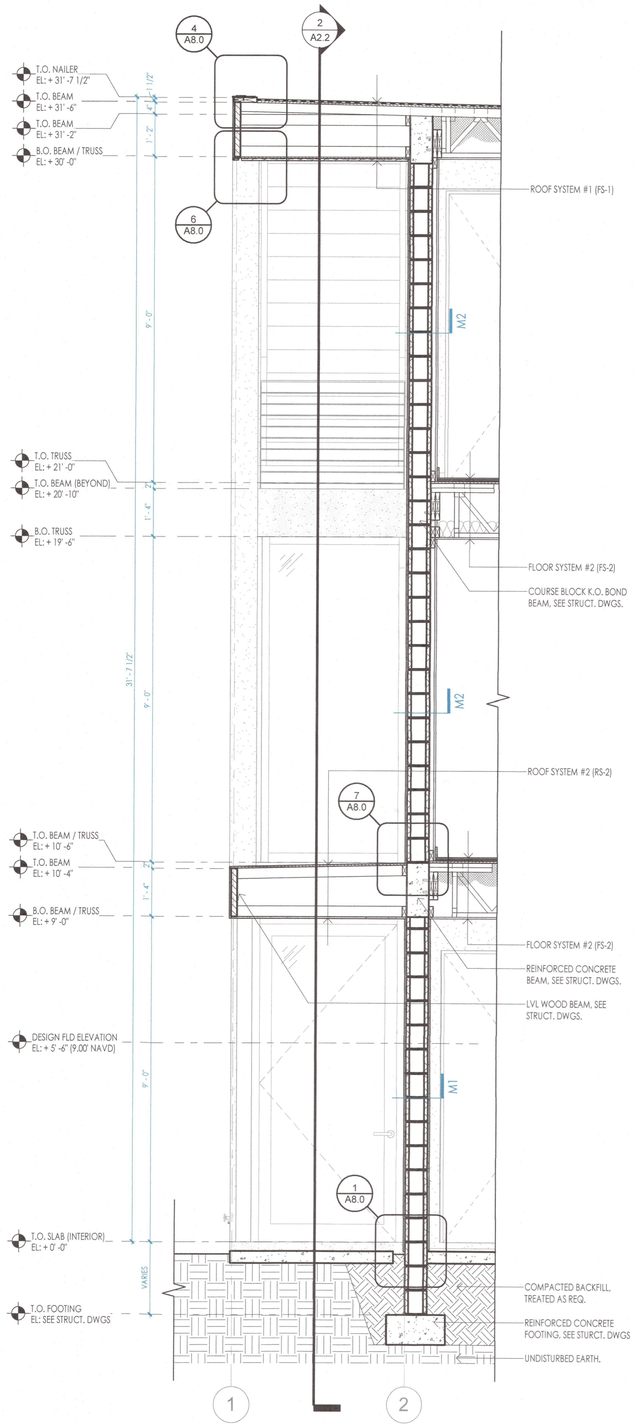

5 A7.0 WALL SECTION
1/2" = 1'-0"

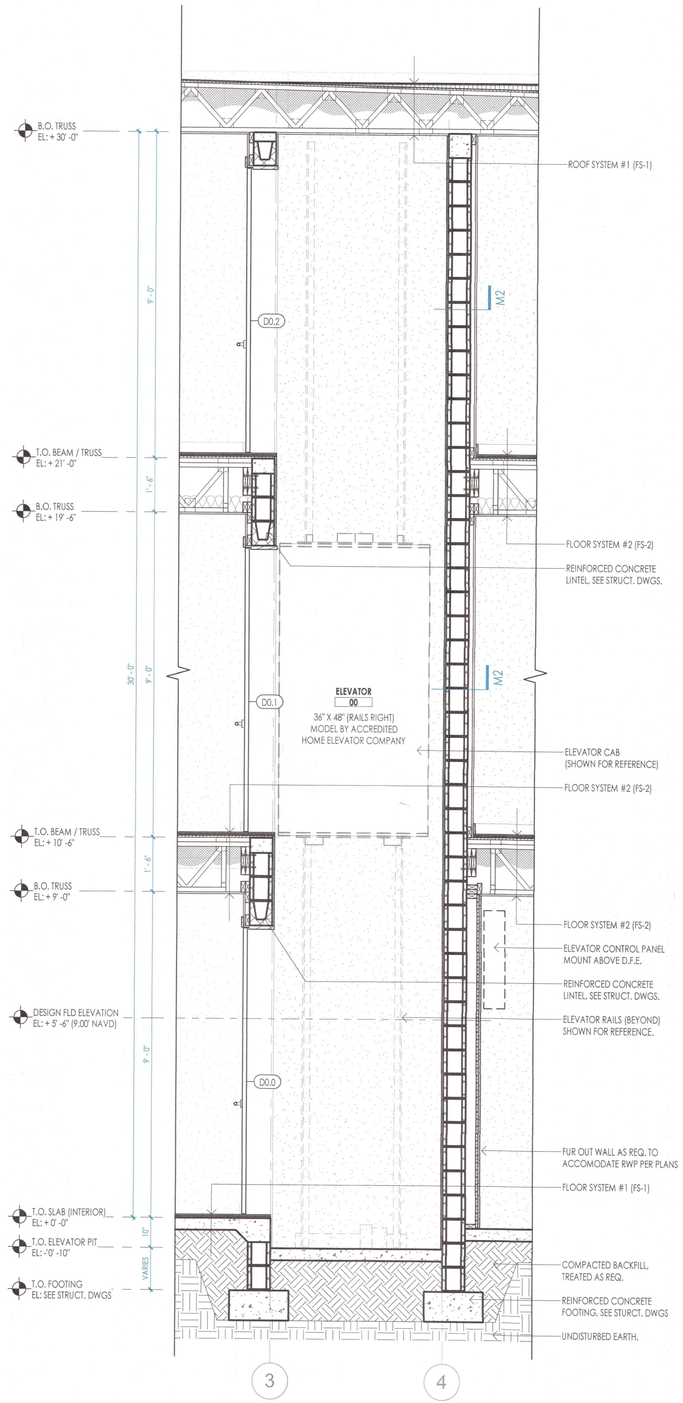

6 A7.0 ELEVATOR SECTION
1/2" = 1'-0"

leader DESIGNSTUDIO
Leader Design Studio, LLC
FL-AR98232

1003 North Orange Ave., Suite A2
Sarasota, Florida 34326
O: (941) 404-8055

GENERAL CONTRACTOR
The Vision Group, LLC
1900 Main Street Suite 205
Sarasota, Florida 34228
O: (941) 357-4040

STRUCTURAL ENGINEER
Apex Consulting Engineers
4315 53rd Avenue East
Bradenton, Florida 34203
O: (941) 365-1900

ENERGY & SUSTAINABILITY CONSULTANTS
ESC, LLC
1348 Fruitville Road
Sarasota, Florida 34236
O: (941) 957-1100

INTERIOR DESIGNER
SAWA Design Studio
1003 North Orange Ave., Suite A2
Sarasota, Florida 34236
O: (941) 564-9291

MAJHER RESIDENCE

7017 Longboat Drive North
Longboat Key, 34228

Project number	LDS-2203
Date	04.27.2023
Drawn by	DM
Checked by	CL
Phase	PERMIT SET

SEAL

STATE OF FLORIDA · CHRISTOPHER R LEADER · REGISTERED ARCHITECT · AR98232

"To the best of the Architect's or Engineer's knowledge, the plans and specifications comply with the applicable minimum building codes and applicable fire safety standards as determined by local authority in accordance with Chapter 553 and 663 of Florida Statutes."

Christopher Leader
AR 98232

REVISION

No.	Description	Date

BLDG PERMIT PLANS
FILE
Copy of Record

SHEET

WALL SECTIONS

RECEIVED
SEP 14 2023
TOWN OF LONGBOAT KEY
Planning, Zoning & Building

A7.0

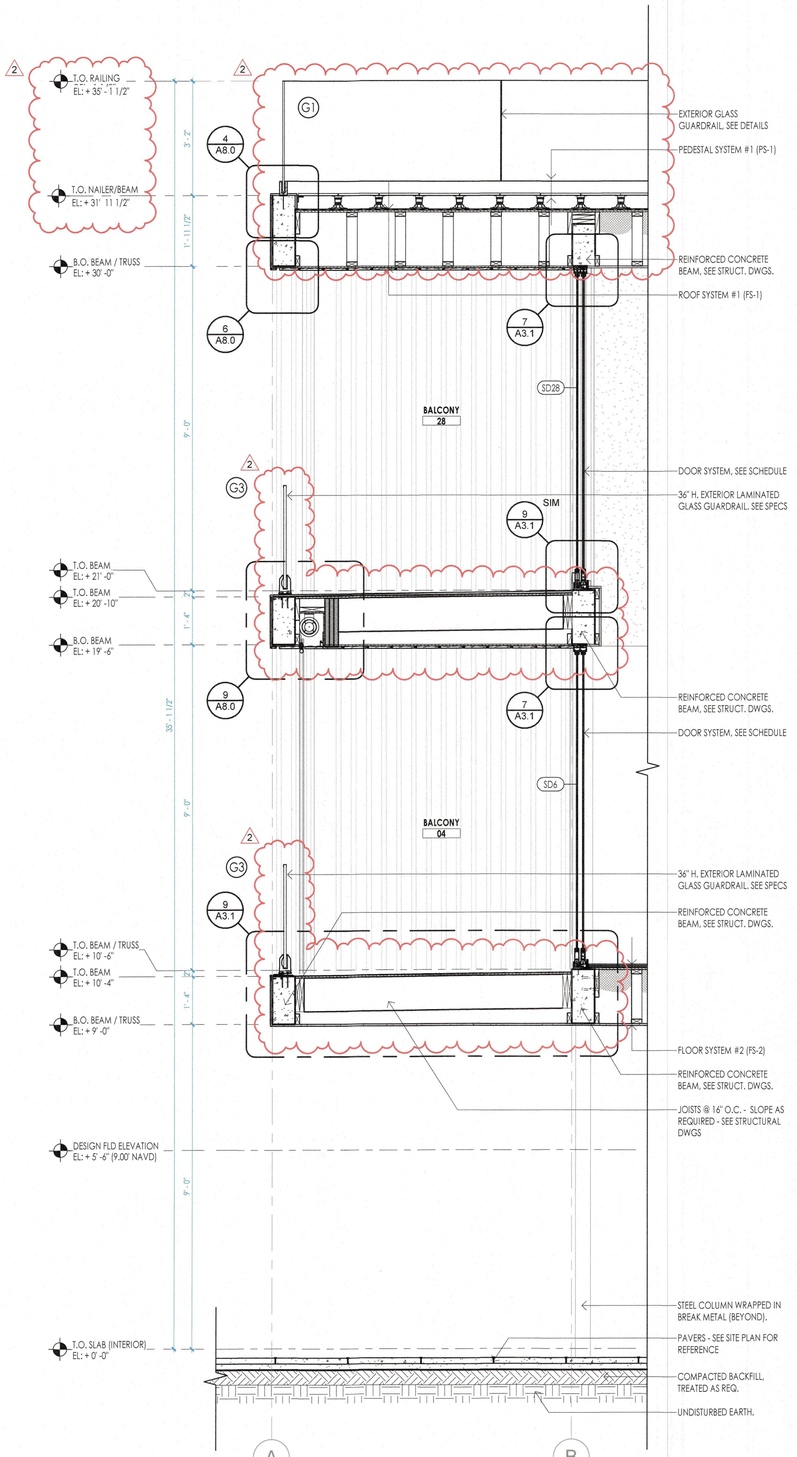

1 A7.1 WALL SECTION 1/2" = 1'-0"

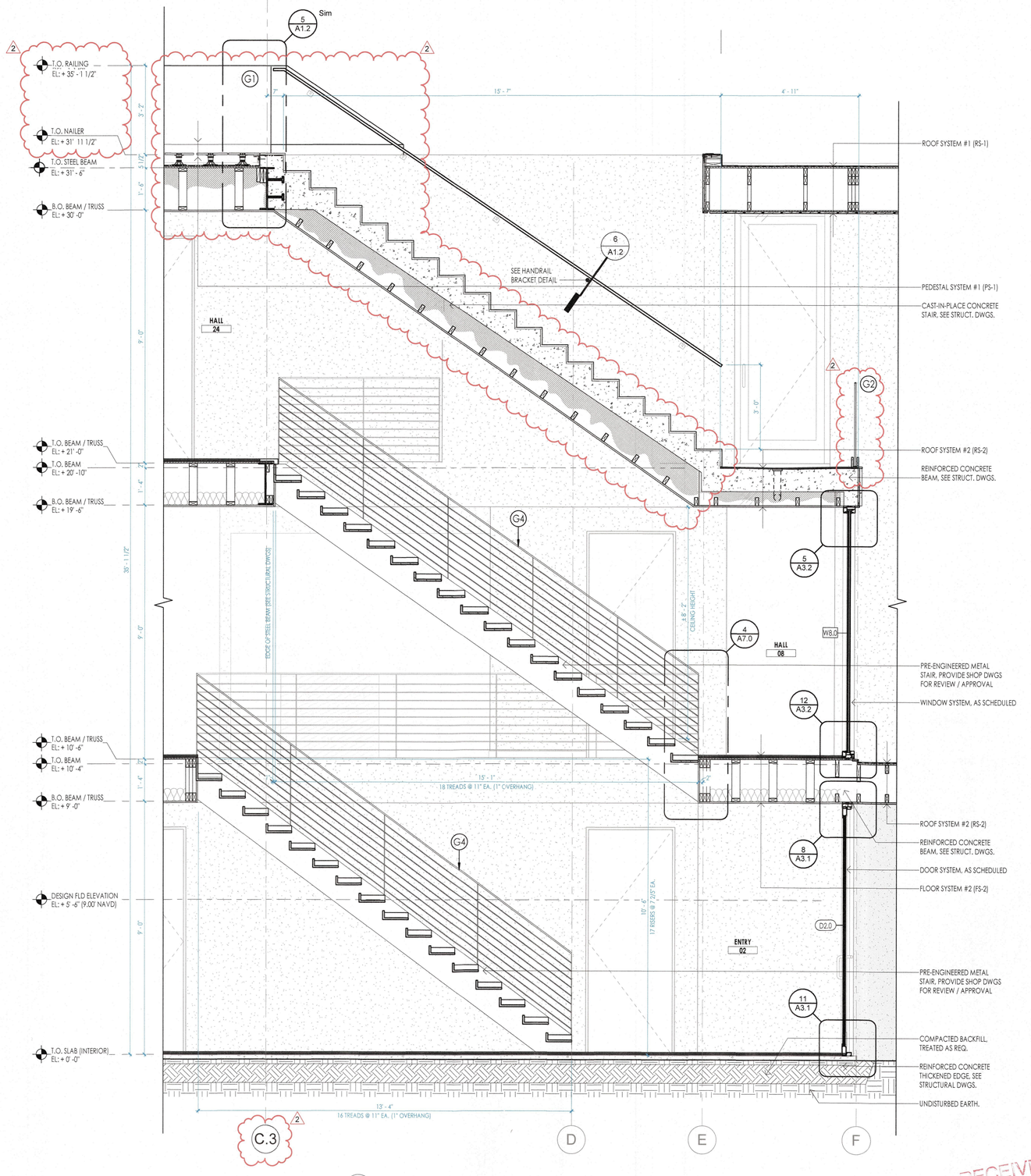

2 A7.1 STAIR SECTION 1/2" = 1'-0"

RECEIVED
APR 2 - 2024
TOWN OF LONGBOAT KEY
Planning, Zoning & Building

leader DESIGNSTUDIO
Leader Design Studio, LLC
FL-AR98232

1003 North Orange Ave., Suite A2
Sarasota, Florida 34326
O: (941) 404-8055

GENERAL CONTRACTOR
The Vision Group, LLC
1900 Main Street Suite 205
Sarasota, Florida 34228
O: (941) 357-4040

STRUCTURAL ENGINEER
Apex Consulting Engineers
4315 53rd Avenue East
Bradenton, Florida 34203
O: (941) 365-1900

ENERGY & SUSTAINABILITY CONSULTANTS
ESC, LLC
1348 Fruitville Road
Sarasota, Florida 34236
O: (941) 957-1100

INTERIOR DESIGNER
SAWA Design Studio
1003 North Orange Ave., Suite A2
Sarasota, Florida 34236
O: (941) 564-9291

MAJHER RESIDENCE

7017 Longboat Drive North
Longboat Key, 34228

Project number	LDS-2203
Date	04.27.2023
Drawn by	DM
Checked by	CL
Phase	PERMIT SET

SEAL

STATE OF FLORIDA
CHRISTOPHER R. LEADER
AR98232
REGISTERED ARCHITECT

"To the best of the Architect's or Engineer's knowledge, the plans and specifications comply with the applicable minimum building codes and applicable fire safety standards as determined by local authority in accordance with Chapter 553 and 663 of Florida Statutes."

Christopher Leader
AR 98232

REVISION

No.	Description	Date
1	BLDG. DEPT. COMMENTS	08/16/23
2	PEDESTAL SYSTEM	02/13/24

SHEET

WALL SECTIONS

BLDG PERMIT PLANS
FILE
Copy of Record

A7.1

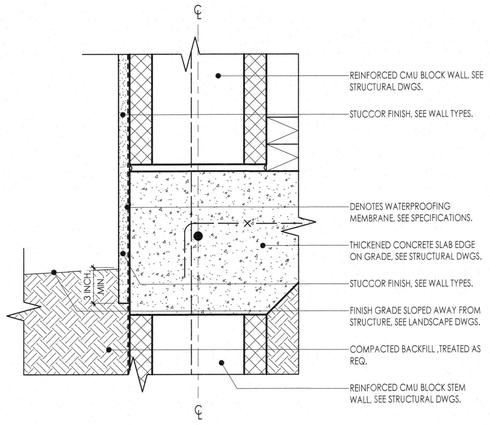

1 A8.0 DETAIL - STUCCO FINISH AT GRADE
3" = 1'-0"

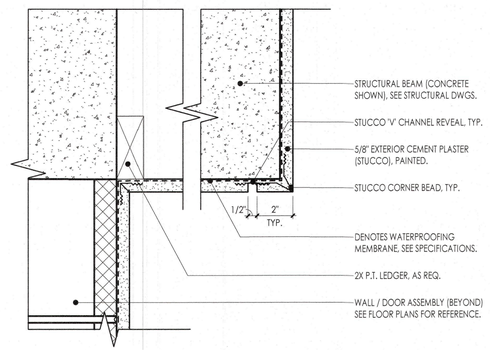

2 A8.0 DETAIL - STUCCO FINISH AT FASCIA / SOFFIT
3" = 1'-0"

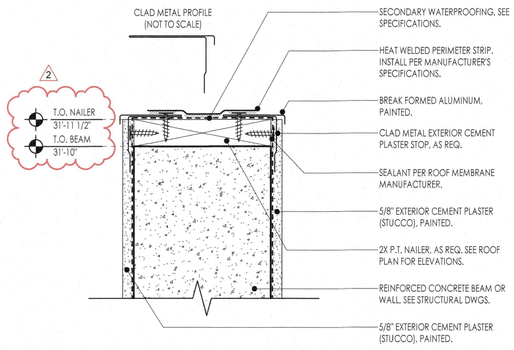

3 A8.0 DETAIL - STUCCO FINISH AT ROOF / FASCIA
3" = 1'-0"

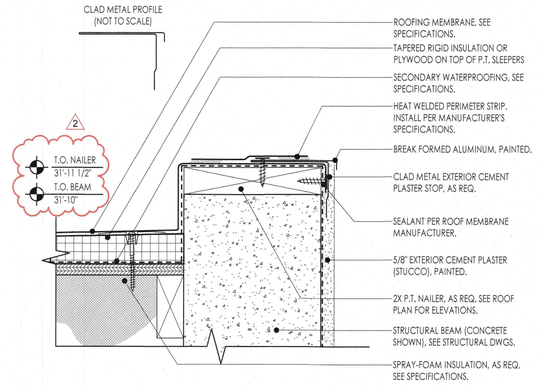

4 A8.0 DETAIL - STUCCO FINISH AT ROOF / FASCIA
3" = 1'-0"

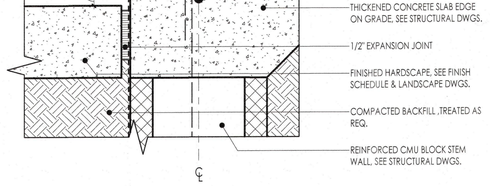

5 A8.0 DETAIL - STUCCO FINISH AT HARDSCAPE
3" = 1'-0"

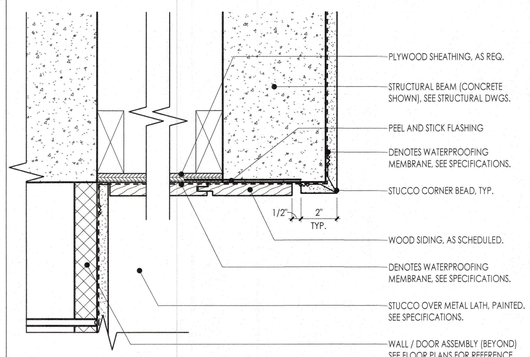

6 A8.0 DETAIL - WOOD FINISH AT FASCIA / SOFFIT
3" = 1'-0"

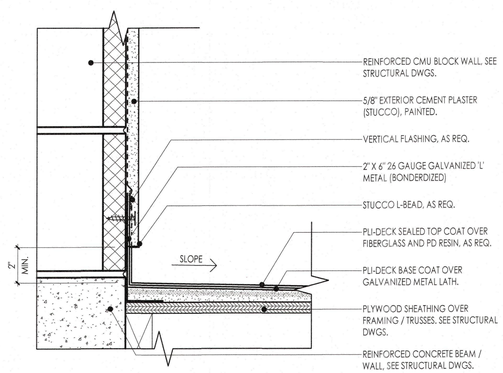

7 A8.0 DETAIL - STUCCO FINISH AT WALL / ROOF
3" = 1'-0"

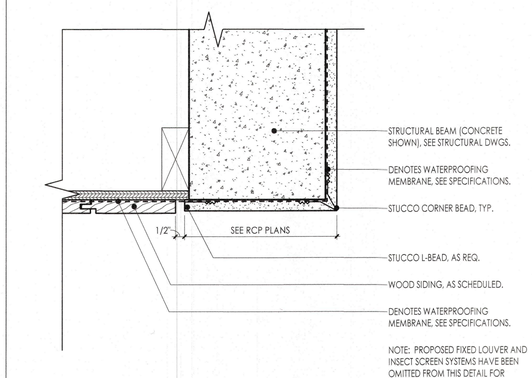

8 A8.0 DETAIL - STUCCO FINISH AT FASCIA / SOFFIT
3" = 1'-0"

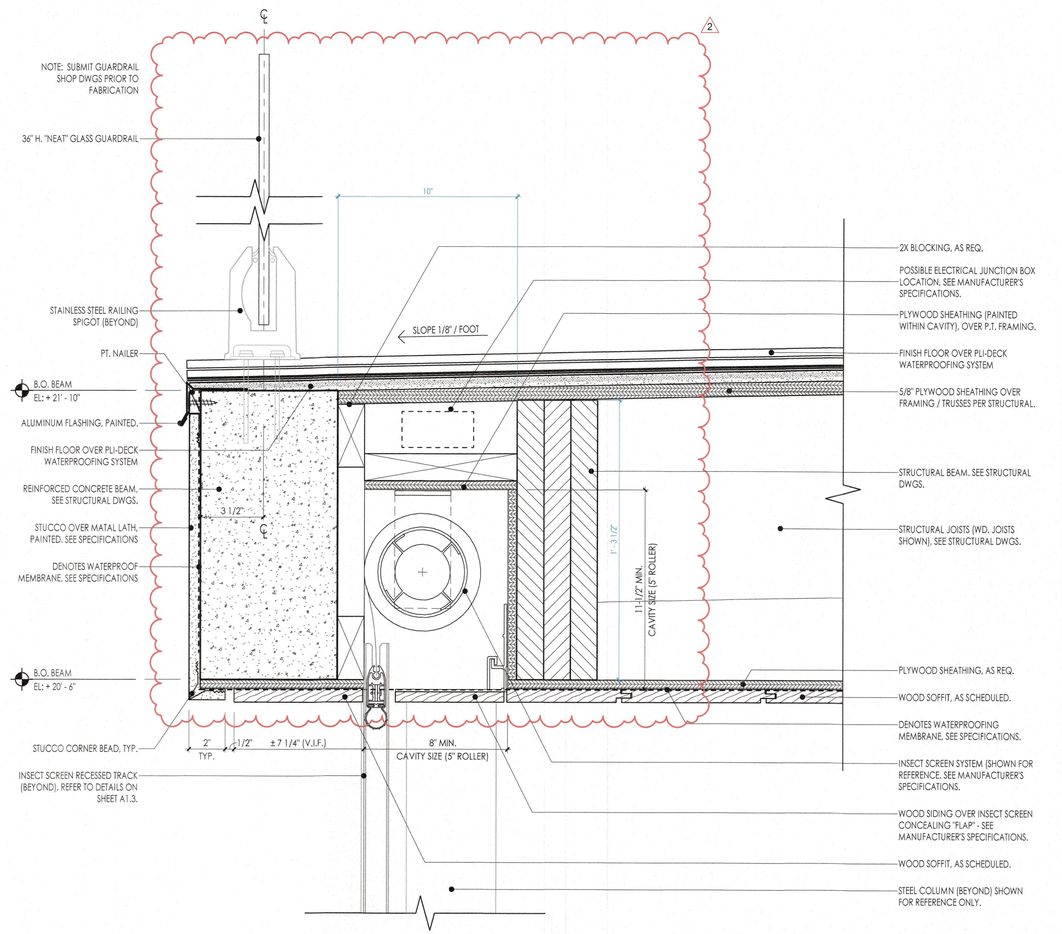

9 A8.0 DETAIL - RECESSED INSECT SCREEN AT FACIA / SOFFIT
3" = 1'-0"

RECEIVED
APR 2 - 2024
TOWN OF LONGBOAT KEY
Planning, Zoning & Building

leader DESIGNSTUDIO
Leader Design Studio, LLC
FL-AR98232

1003 North Orange Ave., Suite A2
Sarasota, Florida 34326
O: (941) 404-8055

GENERAL CONTRACTOR
The Vision Group, LLC
1900 Main Street Suite 205
Sarasota, Florida 34228
O: (941) 357-4040

STRUCTURAL ENGINEER
Apex Consulting Engineers
4315 53rd Avenue East
Bradenton, Florida 34203
O: (941) 365-1900

ENERGY & SUSTAINABILITY CONSULTANTS
ESC, LLC
1348 Fruitville Road
Sarasota, Florida 34236
O: (941) 957-1100

INTERIOR DESIGNER
SAWA Design Studio
1003 North Orange Ave., Suite A2
Sarasota, Florida 34236
O: (941) 564-9291

MAJHER RESIDENCE

7017 Longboat Drive North
Longboat Key, 34228

Project number	LDS-2203
Date	04.27.2023
Drawn by	DM
Checked by	CL
Phase	PERMIT SET

SEAL

STATE OF FLORIDA · CHRISTOPHER S. LEADER · REGISTERED ARCHITECT · AR98232

"To the best of the Architect's or Engineer's knowledge, the plans and specifications comply with the applicable minimum building codes and applicable fire safety standards as determined by local authority in accordance with Chapter 553 and 663 of Florida Statutes."

Christopher Leader
AR 98232

REVISION

No.	Description	Date
1	BLDG. DEPT. COMMENTS	08/16/23
2	PEDESTAL SYSTEM	02/13/24

SHEET

GENERAL DETAILS

BLDG PERMIT PLANS
FILE
Copy of Record

A8.0

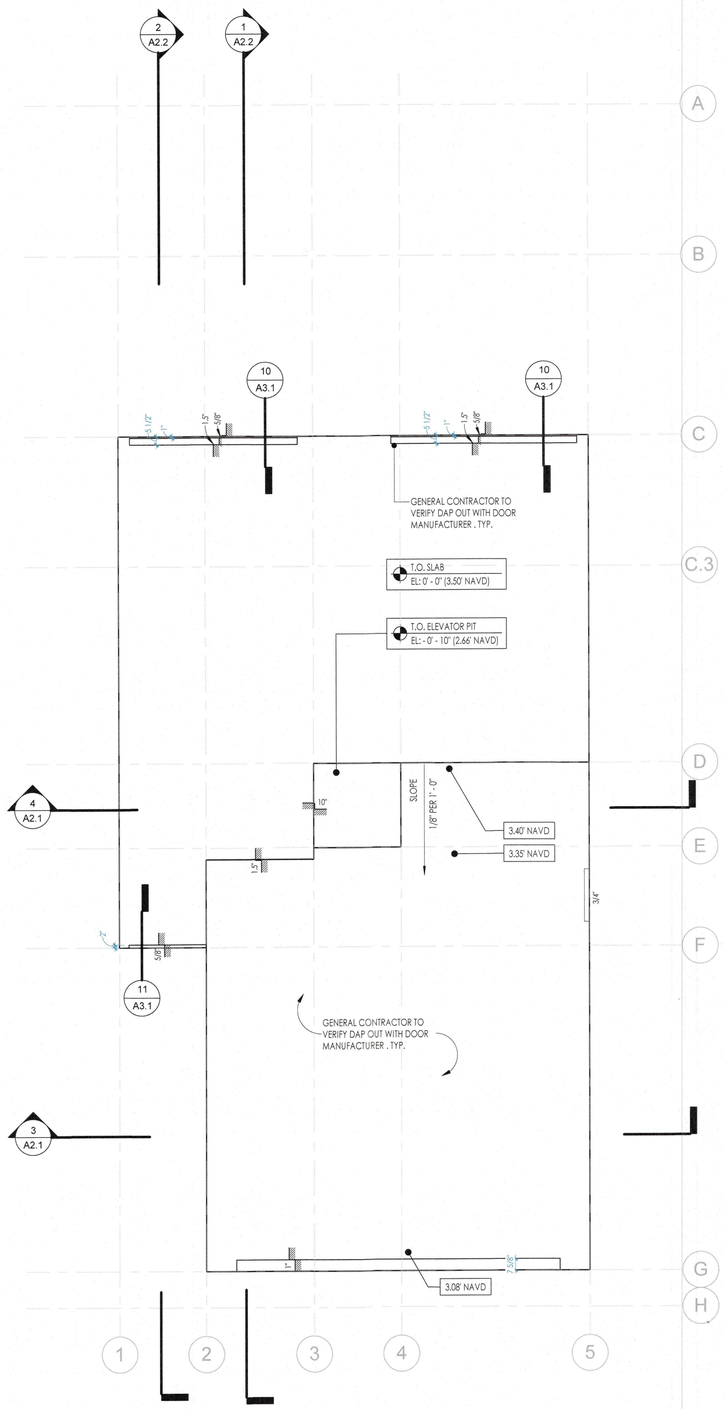

1 A8.1 GROUND FLOOR - DAP OUTS
1/4" = 1'-0"

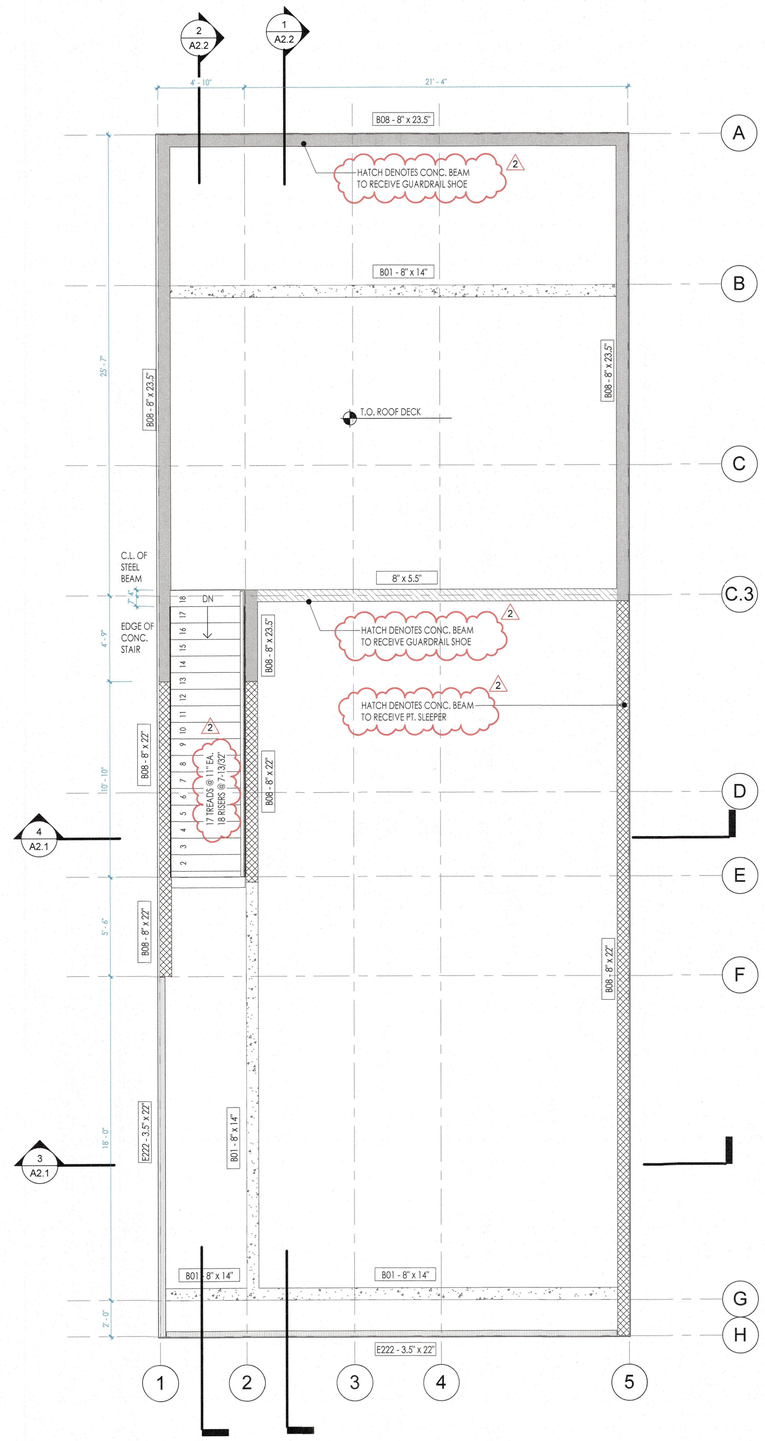

2 A8.1 ROOF PLAN - STRUCTURAL BEAMS OVERLAY
1/4" = 1'-0"

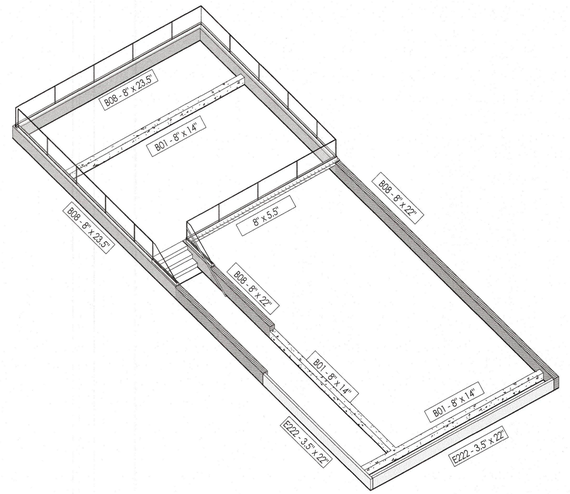

A A8.1 PERSPECTIVE - BEAMS AT ROOF LEVEL

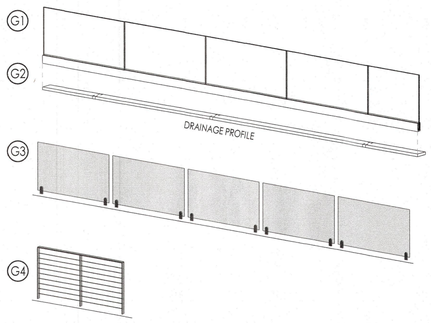

GUARDRAIL TYPES

- G1 GLASS GUARDRAIL W/ BASE SHOE - TOP MOUNTED
- G2 GLASS GUARDRAIL W/ BASE SHOE AND DRAINAGE PROFILE - TOP MOUNTED
- G3 GLASS GUARDRAIL W/ SPIGOTS - TOP MOUNTED
- G4 STAINLESS STEEL CABLE RAILING - TOP MOUNTED

BLDG PERMIT PLANS
FILE
Copy of Record

RECEIVED
APR 2 - 2024
TOWN OF LONGBOAT KEY
Planning, Zoning & Building

leader DESIGNSTUDIO
Leader Design Studio, LLC
FL-AR98232

1003 North Orange Ave., Suite A2
Sarasota, Florida 34326
O: (941) 404-8055

GENERAL CONTRACTOR
The Vision Group, LLC
1900 Main Street Suite 205
Sarasota, Florida 34228
O: (941) 357-4040

STRUCTURAL ENGINEER
Apex Consulting Engineers
4315 53rd Avenue East
Bradenton, Florida 34203
O: (941) 365-1900

ENERGY & SUSTAINABILITY CONSULTANTS
ESC, LLC
1348 Fruitville Road
Sarasota, Florida 34236
O: (941) 957-1100

INTERIOR DESIGNER
SAWA Design Studio
1003 North Orange Ave., Suite A2
Sarasota, Florida 34236
O: (941) 564-9291

MAJHER RESIDENCE

7017 Longboat Drive North
Longboat Key, 34228

Project number	LDS-2203
Date	04.27.2023
Drawn by	Author
Checked by	Checker
Phase	PERMIT SET

SEAL

STATE OF FLORIDA · CHRISTOPHER R. LEADER · REGISTERED ARCHITECT · AR98232

"To the best of the Architect's or Engineer's knowledge, the plans and specifications comply with the applicable minimum building codes and applicable fire safety standards as determined by local authority in accordance with Chapter 553 and 663 of Florida Statutes."

Christopher Leader
AR 98232

REVISION

No.	Description	Date
1	BLDG. DEPT. COMMENTS	08/16/23
2	PEDESTAL SYSTEM	02/13/24

SHEET

GROUND & ROOF PLAN AND GUARDRAILS

2

A8.1

GENERAL NOTES:

CONTRACTOR TO VERIFY MANUFACTURED TRUSS PLAN PRIOR TO PLACEMENT OF STEMWALL OR MONOLITHIC FOOTING.

PLUMBER IS TO INFORM SUPERINTENDENT OF ANY VENTING WHICH UTILIZES A MASONRY WALL TO RESOLVE ANY POSSIBLE STRUCTURAL INTEGRITY ISSUES.

NO PENETRATIONS SHALL BE MADE IN ANY STRUCTURAL MEMBERS OTHER THAN THOSE LOCATED ON THESE DRAWINGS WITHOUT PREVIOUS APPROVAL FROM THE ENGINEER OF RECORD.

ALL OTHER JOB SPECIFICATION AND FINISH SPECIFICATIONS TO BE FURNISHED TO GENERAL CONTRACTOR BY THE HOME OWNER AND ARE NOT PART OF THESE DRAWINGS.

BRAND, STYLE, KIND, COLOR, ETC. OF ALL FINISHES & MATERIALS, ELECTRICAL FIXTURES, APPLIANCES, EQUIPMENT AS AGREED & NEGOTIATED BETWEEN OWNER & CONTRACTOR.

DO NOT SCALE DRAWINGS, USE DIMENSIONS PROVIDED, TYPICALLY. IN THE CASE OF DIMENSIONAL CONFLICT ARCHITECTURAL DIMENSIONS GOVERN OVER STRUCTURAL DIMENSIONS, TYPICALLY.

STRUCTURAL DRAWINGS ARE NOT TO BE REPRODUCED WITHOUT WRITTEN CONSENT OF APEX CONSULTING ENGINEERS.

WHILE EVERY ATTEMPT HAS BEEN MADE IN THE PREPARATION OF THESE DRAWINGS TO AVOID MISTAKES, THE DESIGNER CANNOT GUARANTEE AGAINST HUMAN ERROR. PRIOR TO THE COMMENCEMENT OF ANY WORK, CONTRACTOR/OWNER MUST VERIFY ALL CONDITIONS AND DIMENSIONS AT JOB SITE. THE CONTRACTOR/OWNER SHALL REPORT ALL DISCREPANCIES BETWEEN DRAWINGS AND EXISTING CONDITIONS TO THE DESIGNER PRIOR TO COMMENCING WORK.© 2020 APEX C.E.

DESIGN LOADS AND NOTES:

DEAD LOADS

TYPICAL FLOOR LOADING	– 20PSF
TYPICAL ROOF LOADING	
METAL OR SHINGLE ROOFING	– 15 PSF
TILE ROOFING	– 25 PSF
BOTTOM CHORD	– 10 PSF

LOADING DOES NOT COUNT FOR ANY CONCRETE FLOATING OVER FLORRING/ROOFING.

ANY CHANGES MADE TO THE MATERIALS OF THE STRUCTURE FROM THOSE OF THE ARCHITECTURAL AND STRUCTURAL PLANS SHALL BE NOTIFIED TO THE ENGINEER OF RECORD FROM THE CONTRACTOR TO VERIFY THAT THE NEW LOADS CONFORM TO THE STRUCTURE AND ITS LOAD CARRYING CAPACITY.

LIVE LOADS

FLOOR:	
HABITABLE ATTICS & SLEEPING AREAS	– 30PSF
ALL OTHER AREAS EXCEPT BALCONIES	– 40PSF
BALCONIES & DECKS	– 60PSF
STAIRS:	– 40PSF
ROOF:	
TOP CHORD (FLAT, PITCHED OR CURVED)	– 20PSF
BOTTOM CHORD	
UNINHABITABLE ATTICS WITHOUT STORAGE	– 10PSF
UNINHABITABLE ATTICS WITH STORAGE	– 20PSF

WIND LOADS

SEE COMPONENT & CLADDING CHART FOR PRESSURES

LATERAL LOADS IN TRUSSES ARE RESISTED BY ROOF DIAPHRAGM AT POINT OF WIND LOAD INPUT UNLESS NOTED OTHERWISE.

FRAMING NOTES:

WOOD CONSTRUCTION, CONNECTIONS, AND NAILING SHALL CONFORM TO THE FBC 2020 7th EDITION.

ALL WOOD FRAMING MATERIALS SHALL BE SURFACE DRY AND USED AT 19% MAXIMUM MOISTURE CONTENT

ALL LOAD BEARING WALL FRAMING SHALL BE #2 SOUTHERN PINE.

ALL JOIST AND RAFTER FRAMING SHALL BE #2 SOUTHERN PINE OR HEM-FIR.

ALL FRAMING EXPOSED TO THE WEATHER OR IN CONTACT WITH MASONRY OR CONCRETE SHALL BE PRESSURE TREATED

ALL DOOR HEADERS AT BEARING WALLS TO BE (2) 2X10 SYP OR BETTER, UNLESS NOTED OTHERWISE.

PREFABRICATED METAL JOIST HANGERS, HURRICANE CLIPS, HOLD-DOWN ANCHORS AND OTHER ACCESSORIES SHALL BE MANUFACTURED BY SIMPSON STRONG TIE COMPANY OR EQUIVALENT. INSTALL ALL ACCESSORIES AS PER MANUFACTURERS REQUIREMENTS. ALL STEEL SHALL HAVE A MINIMUM THICKNESS OF 0.04 INCHES (ASTM A446 GRADE A) AND BE GALVANIZED(COATING G60).

TRUSSES AND BEAMS SHALL BEAR DIRECTLY ON GLB OR SYP POSTS U.N.O. WHERE REQUIRED, SHIMS TO BE A36 STEEL U.N.O.

GLB OR SYP POSTS SHALL BEAR DIRECTLY ON CONCRETE SLAB OR ON SYP OR PT PLATE UNLESS NOTED OTHERWISE.

MEMBERS DESIGNATED 'LVL' (E.G., 1¾" x 14" LVL) SHALL BE LAMINATED VENEER LUMBER AS MANUFACTURED BY BOISE (VERSA-LAM) OR ENGINEER APPROVED SUBSTITUTION.

BOLT HEADS SHALL BE CENTERED & DRILLED NO MORE THAN 1/16" LARGER THAN BOLT DIAMETER. BOLTED CONNECTIONS SHALL BE TIGHT BUT NOT TO THE EXTENT OF CRUSHING WOOD UNDER WASHERS.

ALL NAIL SHANK SIZES TO BE MINIMUM OF 0.131 INCHES.

FLOOR FRAMING

USE SIMPSON H2.5A AT EACH INTERIOR MEMBER (WITH OR WITHOUT UPLIFT) WHERE POSSIBLE. PROVIDE ADDITIONAL TIEDOWNS FOR GREATER UPLIFTS.

USE TRUSS HANGERS TO ATTACH FLOOR TRUSSES TO LVL BEAMS IF LESS THAN 3-1/2" SQUARE BEARING AREA IS PROVIDED.

PRE-ENGINEERED FLOOR TRUSSES/JOIST TO BE APPROVED BY ENGINEER OF RECORD.

ROOF FRAMING NOTES:

THE DESIGN OF ROOF FRAMING SHALL BE BASED ON THE REQUIREMENTS OF THE FLORIDA BUILDING CODE, 2020 7th EDITION.

DESIGN WIND LOADS SHALL BE APPLIED IN ACCORDANCE WITH ASCE 7-16. SEE WIND NOTES FOR WIND DESIGN REQUIREMENTS.

ROOF TRUSS MANUFACTURER SHALL SUBMIT AND PROVIDE COMPLETE LAYOUT AND FURNISH THE FOLLOWING INFORMATION: ROOF PITCH, LUMBER SIZE, SPACING, SPECIES AND GRADING, LOCATION AND MAGNITUDE OF UPLIFT LOADS.

PRE-ENGINEERED TRUSS DESIGN SHALL BE SIGNED AND SEALED BY A FLORIDA LICENSED PROFESSIONAL ENGINEER.

ROOF SHEATHING SHALL BE 15/32" CD PLYWOOD OR EQ.

MEAN ROOF HEIGHT SHALL BE DETERMINED BY TRUSS DESIGNER FROM PLANS.

CONTRACTORS SHALL VERIFY WITH ROOF TRUSS PLAN PRIOR TO PLACEMENT OF FOOTINGS.

TRUSSES MUST BE DESIGNED TO SUPPORT WALLS AGAINST OUT-OF-PLANE LOADS. THIS APPLIES TO ALL TRUSSES WITH A RAISED HEEL CONDITION THAT BEAR ON AN EXTERIOR WALL.

TRUSS MANUFACTURER'S TRUSS LAYOUT SHALL SHOW ALL CONNECTIONS BETWEEN TRUSSES AND OTHER TRUSSES AND BETWEEN TRUSSES AND WOOD BEAMS.

USE SIMPSON H10 OR H10-2 AT EACH TRUSS FOR WOOD WALLS AND HETA20 FOR CONCRETE WALLS WHERE POSSIBLE. PROVIDE ADDITIONAL OR REPLACEMENT TIEDOWNS FOR GREATER UPLIFTS.

WHERE THE H-10 CANNOT BE USED ON WOOD WALLS (EG. ON 3-PLY GIRDERS, AT CORNERS, ETC.) USE SIMPSON H2.5 AND ADDITIONAL TIEDOWNS TO MEET UPLIFT REQUIREMENTS.

MASONRY NOTES:

MASONRY CONSTRUCTION SHALL CONFORM TO THE REQUIREMENTS OF THE "SPECIFICATION FOR MASONRY STRUCTURES (ACI 530.1-02)", PUBLISHED BY THE AMERICAN CONCRETE INSTITUTE. SEE "TESTING AND INSPECTION NOTES" FOR ADDITIONAL INFORMATION.

HOLLOW LOAD-BEARING MASONRY UNITS SHALL CONFORM TO THE ASTM C-90, AND BE MADE WITH NORMAL WEIGHT AGGREGATE. UNIT COMPRESSIVE STRENGTH OF 1,900 PSI ON NET SECTION TO PROVIDE A MINIMUM NET AREA COMPRESSIVE STRENGTH OF MASONRY (pm) OF 2,500 PSI, AS DETERMINED BY THE STRENGTH METHOD OF ACI 530.1.

FILL ALL BOND BEAMS AND REINFORCED CELLS
SOLIDLY WITH GROUT. GROUT SHALL CONFORM TO ASTM C-476 AND SHALL OBTAIN A MIN. 28 DAY COMPRESSIVE STRENGTH OF 2,500 PSI, TESTED PER ASTM C-1019 EACH 5,000 S.F. GROUT STOPS ARE TO BE MESHED OR SCREEN TYPE, FELT PAPER IS NOT ALLOWED.

REINFORCED STEEL SHALL BE IN ACCORDANCE WITH ASTM A-615, GRADE 60. SHOP FABRICATE REINFORCING BARS WHICH ARE SHOWN TO BE HOOKED OR BENT. DOWELS SHALL HAVE STANDARD 90 DEGREE HOOKS AND LAPPED WITH FIRST LIFT OF REINFORCING. PROVIDE A MINIMUM LAP OF 40 X BAR DIAMETER.

MORTAR SHALL CONFORM TO ASTM C-270, TYPE M, S, OR N. ALL MORTAR SHALL MEET THE "PROPORTION SPECIFICATION" OF ASTM C-270 AND EVALUATED IN ACCORDANCE WITH ASTM C-780.

UNLESS OTHERWISE INDICATED, ALL WALLS SHALL BE LAID IN RUNNING BOND. BOND CORNERS AND OTHER INTERSECTIONS OF ALL LOAD BEARING WALLS. INTERSECTING NON-LOADBEARING WALLS SHALL BE CONNECTED BY PREFABRICATED TEE AND CORNER HORIZONTAL JOINT REINFORCEMENT @ 16"O.C.

PROVIDE VERTICAL REINFORCING BARS OF THE GIVEN SIZE AND SPACING AS INDICATED. PROVIDE BARS AT WALL CORNERS, INTERSECTION AND PEN EDGES, PROVIDE CLEAN OUTS FOR EACH GROUT POUR EXCEEDING 5FT.

PROVIDE PRECAST LINTELS ABOVE ALL WALL OPENINGS INCLUDING HVAC DUCTS. SEE DRAWINGS FOR LOCATIONS OF ALL OPENINGS. UNLESS OTHERWISE ON PLAN PROVIDE PRECAST LINTELS BELOW AS A MINIMUM.

-OPENINGS LESS THAN 6FT = 8" PRECAST U-LINTEL W/ 1-#5 & 8" KNOCK-OUT COURSE W/ 1-#5. (TYPICAL PERIMETER BOND BEAM 16" TOTAL DEPTH)

- OPENINGS GREATER THAT 6FT = SEE DRAWINGS. PROVIDE ONE REINFORCED CELL EACH SIDE OF OPENING W/ 8" LINTEL BEARING.

ALL WALLS OVER 8' HIGH MUST BE BRACED PRIOR TO POURING TIE BEAMS.

CAST-IN-PLACE CONCRETE NOTES:

CONCRETE MIXES SHALL BE DESIGNED PER ACI 30, USING PORTLAND CEMENT CONFORMING TO ASTM C-150, AGGREGATE CONFORMING TO ASTM C-33, AND ADMIXTURES CONFORMING TO ASTM C-494, C-1017, C-618, C-989 AND C-260. CONCRETE SHALL BE READY-MIXED IN ACCORDANCE WITH ASTM C-94.

CONCRETE SHALL CONFORM TO THE FOLLOWING COMPRESSIVE STRENGTH, SLUMP AND WATER/CEMENT RATIO REQUIREMENT:

IN ALL SALT ENVIRONMENTS A MIN. OF 5000PSI CONCRETE SHALL BE USED. (SLAB SHALL BE EXEMPT.) FOR OTHER ENVIRONMENTS USE 3000 PSI CONCRETE.

ALL CONCRETE WORK SHALL CONFORM TO ASTM ACI 301, "SPECIFICATION FOR STRUCTURAL CONCRETE BUILDINGS". HOT WEATHER CONCRETE SHALL BE IN ACCORDANCE WITH ACI 305.

ALL REINFORCING STEEL SHALL CONFORM TO ASTM A-615, GRADE 60.

ALL WELDED WIRE FABRIC (WWF) SHALL CONFORM TO ASTM A-185 (FLAT SHEETS ONLY).

ALL REINFORCED STEEL SHALL BE SET AND TIED IN PLACE PRIOR TO POURING OF CONCRETE, EXCEPT THAT VERTICAL DOWELS FOR MASONRY WALL REINFORCING MAY BE "FLOATED" IN PLACE.

REINFORCING STEEL INCLUDING HOOKS AND BENDS, SHALL BE DETAILED IN ACCORDANCE WITH ACI 315. ALL REINFORCING STEEL INDICATED AS BEING CONTINUOUS (CONT) SHALL BE LAPPED 40 X BAR DIAMETER. LAP CONTINUOUS BOTTOM BARS OVER SUPPORTS, LAP CONTINUOUS TOP BARS AT MID-SPAN UNLESS OTHERWISE NOTED.

UNLESS OTHERWISE NOTED, THE FOLLOWING MINIMUM CONCRETE COVER SHALL BE PROVIDED FOR REINFORCEMENT IN ACCORDANCE W/ ACI 318-14:
SECTION 7.7.1
A. CONCRETE EXPOSED TO WEATHER:
#6 THROUGH #18 BARS -2"
#5 BAR, W31 OF D31 WIRE & SMALLER - 1½"
B. CONCRETE NOT EXPOSED TO EARTH OR WEATHER:
BEAMS AND COLUMNS -1½"
C. FOUNDATIONS EXPOSED TO EARTH -3"

BAR SUPPORTS AND HOLDING BARS SHALL BE PROVIDED FOR ALL REINFORCING STEEL TO INSURE MINIMUM CONCRETE COVER. BAR SUPPORTS SHALL BE PLASTIC TIPPED OR STAINLESS STEEL.

ALL EDGES OF PERMANENTLY EXPOSED CONCRETE SURFACES SHALL BE CHAMFERED ¾" UNLESS OTHERWISE NOTED.

FORMWORK SHALL REMAIN IN PLACE UNTIL CONCRETE HAS OBTAINED AT LEAST 90% OF ITS 28 DAY COMPRESSIVE STRENGTH. THE CONTRACTOR SHALL PROVIDE ALL SHORING AND RESHORING.

EXTERIOR OPENINGS

EXTERIOR WINDOWS AND GLASS DOORS SHALL BE TESTED BY AN APPROVED INDEPENDENT TESTING LABORATORY AND BEAR AN AAMA, WDMA OR OTHER APPROVED LABEL IDENTIFYING THE MANUFACTURER, PERFORMANCE CHARACTERISTICS AND APPROVED PRODUCT EVALUATION ENTITY INDICATING COMPLIANCE WITH THE REQUIREMENTS OF THE FOLLOWING SPECIFICATION: ANSI/AAMA/NWWDA.

WINDOW AND DOOR ASSEMBLIES SHALL BE ATTACHED IN STRICT ACCORDANCE WITH THE PUBLISHED MANUFACTURER RECOMMENDATIONS TO ACHIEVE RESISTANCE TO APPROPRIATE WIND SPEEDS WITH 3 SECOND WIND GUSTS AND SHALL INCLUDE THE SPECIFICATION OF BUCK STRIP MATERIALS AND ANCHORING.

WOOD CRIBS ABOVE ARCHED WINDOWS SHALL COMPLY WITH DRAWING DETAIL CONTAINED HEREIN.

ALL SHIM MATERIALS SHALL BE MADE FROM MATERIALS CAPABLE OF SUSTAINING APPLICABLE LOADS, AND LOCATED AND APPLIED IN A THICKNESS CAPABLE OF WITHSTANDING THOSE LOADS.

THE DESIGN RESPONSIBILITY FOR THE INSTALLATION OF DOORS AND WINDOWS IS DELEGATED TO THE SPECIALTY ENGINEER OF THE MANUFACTURER AS REINFORCED WITH IN ALL TESTING DATA REQUIRED SUBMITTED IN CONJUNCTION WITH THIS PLAN.

OPENING PERIMETERS HAVE BEEN DESIGNED TO TRANSMIT THE IMPOSED LOADS TO THE MAIN WIND FORCE RESISTING SYSTEM.

GARAGE DOORS SHALL SATISFY THE REQUIREMENTS OF FBC 2020 7th EDITION FOR WIND LOADS AS DEFINED IN ASCE 7-16

IMPACT GLASS OR SHUTTERS SHALL BE USED

SOIL NOTES:

COMPACT BACK FILL 5'-0" FROM STRUCTURE. MINIMUM ALLOWABLE BEARING CAPACITY SHALL BE 2000 PSF.

ALL SOILS SHALL BE FREE OF DEBRIS AND ORGANIC MATERIALS AND COMPACTED TO 95% OF MODIFIED PROCTOR (ASTM D1557).

FOUNDATIONS SHALL BE BUILT ON UNDISTURBED SOIL OR PROPERLY COMPACTED FILL MATERIAL COMPLYING WITH THE FBC-R 2020.

STEM WALL FILL SHALL NOT EXCEED 12" LIFTS. SOIL BELOW FOOTINGS SHALL BE TESTED AND ALL SUBSEQUENT FILL SOILS IN LIFT NOT TO EXCEED 12"

ALL FILL MATERIAL SHALL BE SP OR SM MATERIAL AS DEFINED BY THE UNIFORM SOIL CLASSIFICATION SYSTEM.

ANY QUESTIONABLE SOIL SHALL BE REMOVED OR BROUGHT TO THE ATTENTION OF THE ENGINEER OF RECORD FOR EVALUATION.

SOIL BEARING CAPACITY IS BASED UPON 2,000 PSF.

WOOD GRADE STAKES ARE PROHIBITED.

PEST/DECAY PROTECTION NOTES:

ALL PLANTINGS AND IRRIGATION/SPRINKLER SYSTEMS AND RISERS FOR SPRAY HEADS SHALL BE AT LEAST 1 FOOT FROM BUILDING SIDEWALLS.

SOIL TREATMENT SHALL MEET THE REQUIREMENTS OF 2020 FBC R318 METHOD.

WOOD GRADE STAKES SHALL NOT BE USED.

PROTECTION AGAINST DECAY AND TERMITES SHALL BE PROVIDED IN ACCORDANCE WITH 2020 FBC R317, R318.

ROOF FLASHING SHALL BE PROVIDED IN ACCORDANCE WITH THE REQUIREMENTS OF 2020 FBC R703.4, R703.8.5, R903.2 AND R905.

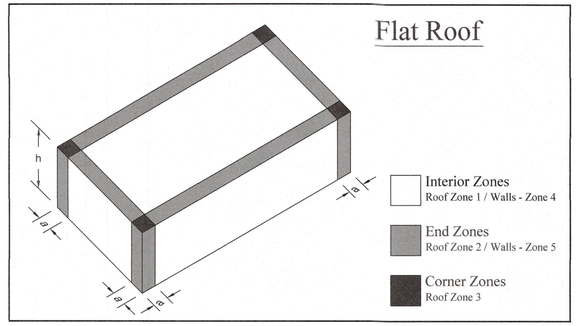

SHEATHING NOTES:
- ROOF & WALL SHEATHING TO BE WOOD STRUCTURAL PANEL 15/32" OR GREATER (PLYWOOD OR EQUAL OSB) U.N.O.
- ENGINEERED ROOF TRUSSES @ 24" O.C. MAXIMUM
- ALL GABLE ENDS TO BE NAILED 4" O.C. @ ALL EDGES, BLOCKING, SUPPORT, FIELD, ETC.

NAILING PATTERN:
ZONE 1 = 6" O.C. MAX INTERMEDIATE, 6" O.C. MAX PANEL EDGES
ZONE 2 = 6" O.C. INTERMEDIATE AND 4" O.C. PANEL EDGES
ZONE 3 = 4" O.C. INTERMEDIATE AND EDGES
ZONE 4 = 8" O.C. MAX INTERMEDIATE, 6" O.C. MAX PANEL EDGES
ZONE 5 = 6" O.C. INTERMEDIATE AND EDGES

NAILS: 8d COMMON FOR ½", 10d COMMON FOR 5/8"

"A" DIMENSION = 40% OF EAVE HEIGHT OR 10% OF LEAST HORIZONTAL DIMENSION, WHICHEVER IS LESS, BUT NOT LESS THAN EITHER 4% OF THE LEAST HORIZONTAL DIMENSION OR 3' MINIMUM

SCOPE OF WORK:

1. NEW RESIDENCE PER STRUCTURAL PLANS.

DESIGN CRITERIA

ALL WORK IS TO BE IN ACCORDANCE WITH THE FLORIDA BUILDING CODE 2020, 7th EDITION.

OCCUPANCY TYPE:	R-3
CONSTRUCTION TYPE:	V-B
FIRE SPRINKLERED:	NO
BASIC WIND SPEED:	150 mph
RISK CATEGORY:	II
WIND EXPOSURE:	D
BUILDING:	ENCLOSED
PRESSURE DESIGN FACTOR:	+/- 0.18

"Design Wind Pressures (asd) for Component & Cladding (PSF)

Tributary Area [sf]	Wind speed (mph) 150		Exposure Category Exp D				Building height in feet 40			
	Roof						Walls, Windows & Doors			
	Zone 1		Zone 2		Zone 3		Zone 4		Zone 5	
	POS	NEG	POS	NEG	POS	NEG	POS	NEG	POS	NEG
10	24.37	-38.71	24.37	-67.38	24.37	-99.63	42.29	-45.87	42.29	-56.63
20	22.32	-37.68	22.32	-62.26	22.32	-93.49	39.08	-42.64	39.08	-50.15
50	19.25	-36.15	19.25	-54.58	19.25	-84.27	34.82	-38.36	34.82	-41.59
100	17.20	-35.12	17.20	-49.46	17.20	-78.13	31.54	-35.12	31.54	-35.12

Tributary Area [sf]	Garage Door Pressures			Roof Overhang Pressures	
	POS/NEG			Zone 1&2	Zone 3
			Garage Door pressures (as per FBC TableR301.2(4)) have been interpolated for effective areas	NEG	NEG
10				-85.30	-139.05
20				-85.30	-126.77
50	29.41	-33.28		-85.30	-108.34
100	28.17	-31.35		-85.30	-96.05

Structural Components Only
APEX Consulting Engineers BRD, LLC
Cert.of Auth.:32081
JEFFREY L. VOGEL, PE #81235
4315 53RD AVE E, BRADENTON FL 34203
TEL (941) 365-1900 FAX (888)365-4641
JEFF@APEXENGINEERS.COM

"THIS ITEM HAS BEEN ELECTRONICALLY SIGNED AND SEALED BY (JEFFREY VOGEL, PE) USING A SHA-1 AUTHENTICATION CODE FOR STRUCTURAL COMPONENTS ONLY AND DOES NOT INCLUDE "E" SHEET(S). PRINTED COPIES OF THIS DOCUMENT ARE NOT CONSIDERED SIGNED AND SEALED AND THE SHA-1 AUTHENTICATION CODE MUST BE VERIFIED ON ANY ELECTRONIC COPY"

Majher Residence:
7017 Longboat Dr. N.,
Longboat Key, FL 34228

WHILE EVERY ATTEMPT HAS BEEN MADE IN THE PREPARATION OF THESE DRAWINGS TO AVOID MISTAKES, THE DESIGNER CANNOT GUARANTEE AGAINST HUMAN ERROR. PRIOR TO THE COMMENCEMENT OF ANY WORK, CONTRACTOR/OWNER MUST VERIFY ALL CONDITIONS AND DIMENSIONS AT JOB SITE. THE CONTRACTOR/OWNER SHALL REPORT ALL DISCREPANCIES BETWEEN DRAWINGS AND EXISTING CONDITIONS TO THE DESIGNER PRIOR TO COMMENCING WORK.© 2020 APEX C.E.

TAG	DATE	REVISION REASON

BLDG PERMIT PLANS
FILE
Copy of Record

RECEIVED
SEP 14 2023
TOWN OF LONGBOAT KEY
Building, Zoning & Planning

SEAL

Date: 01/19/2021
Drawn by: RS
Job No.: 20-0470
Sheet:

S.1

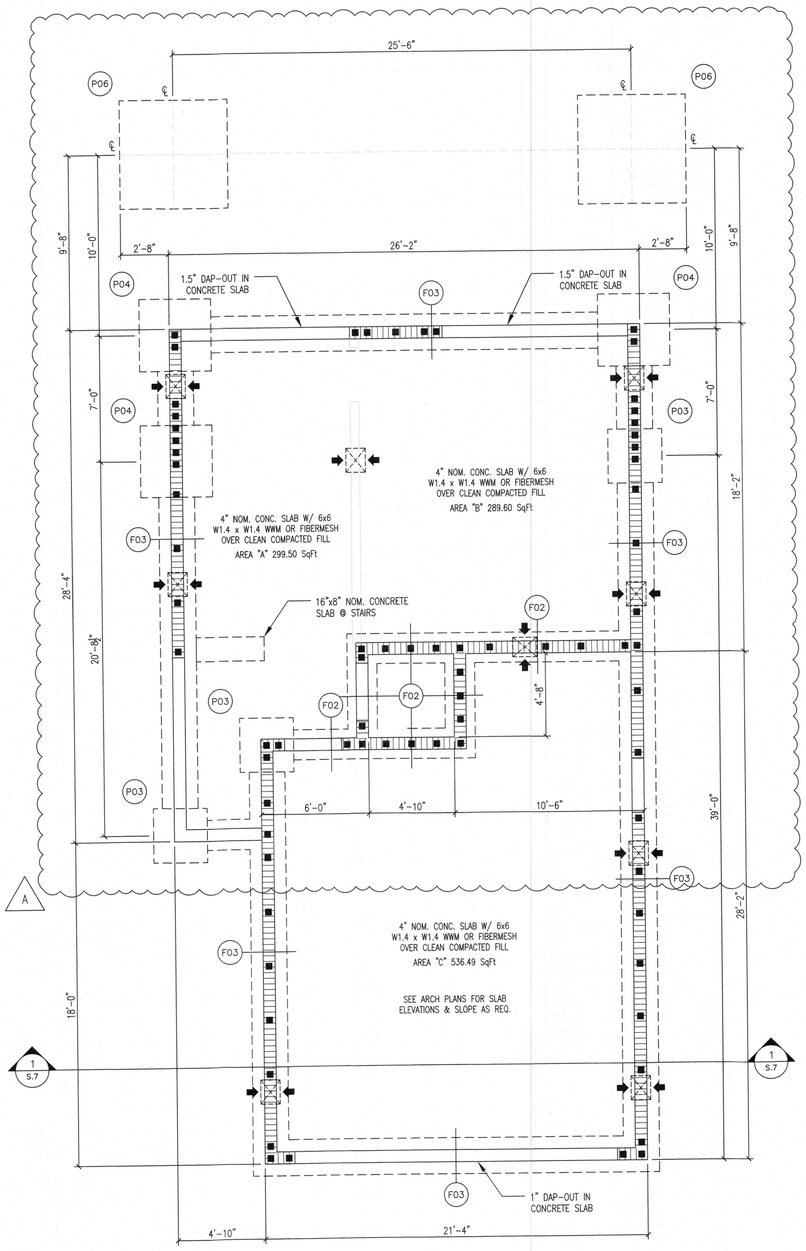

FOUNDATION PLAN

SCALE: 1/4" = 1'-0"

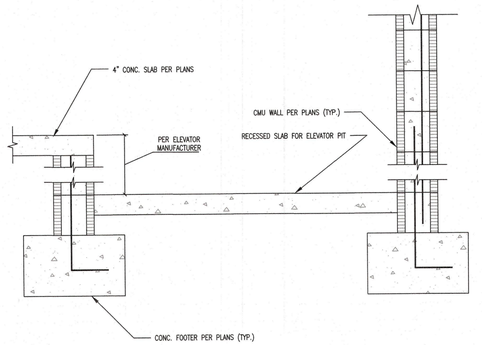

RECESSED ELEVATOR PIT

SCALE: N.T.S.

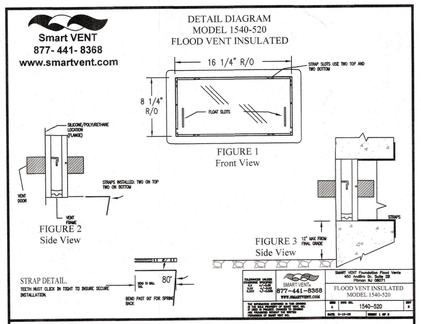

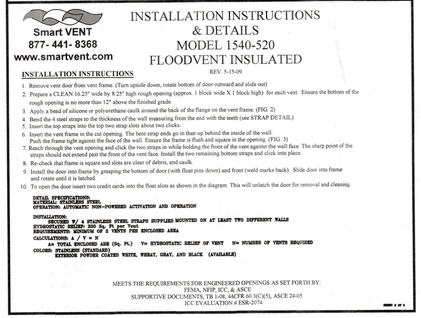

A

FLOW THRU CALCULATIONS

HYDROSTATIC RELIEF: 200 Sq. Ft per Vent
REQUIREMENTS: MINIMUM OF 2 VENTS PER ENCLOSED AREA
CALCULATIONS: A / V = N

A= TOTAL ENCLOSED AREA (Sq. Ft.) V= HYDROSTATIC RELIEF OF VENT N= NUMBER OF VENTS REQUIRED
[AREA "A" = 299.50 Sq. Ft. / 200 Sq. Ft. = MIN. 2 VENTS REQUIRED]
[AREA "B" = 289.60 Sq. Ft. / 200 Sq. Ft. = MIN. 2 VENTS REQUIRED]
[AREA "B" = 536.49 Sq. Ft. / 200 Sq. Ft. = MIN. 3 VENTS REQUIRED]
[AREA TOTAL = 1,125.59 Sq. Ft. / 200 Sq. Ft. = MIN. 6 VENTS REQUIRED]
(7) VENTS PROVIDED. 1,400 Sq. Ft. OF RELIEF.

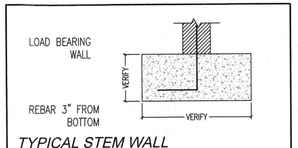

TYPICAL STEM WALL

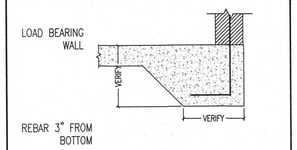

TYPICAL MONO FOOTER

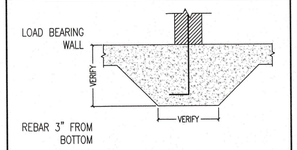

TYPICAL INTERIOR FOOTING

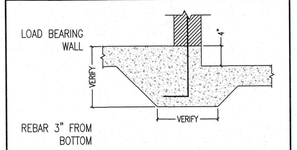

TYPICAL STEP DOWN FOOTING

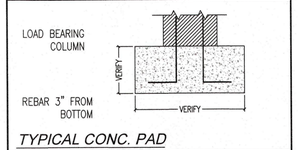

TYPICAL CONC. PAD

FOOTING SCHEDULE

MARK	TYPE	SIZE (W x D)	REBAR
F01	STEM WALL	16" x 10"	(2) #5
F02	STEM WALL	20" x 10"	(3) #5
F03	STEM WALL	24" x 12"	(3) #5
F04	STEM WALL	30" x 12"	(4) #5
F05	MONO FOOTER	12" x 8"	(2) #5
F06	MONO FOOTER	12" x 20"	(2) #5
F07	MONO FOOTER	16" x 20"	(3) #5
F08	INTERIOR FOOTING	12" x 12"	(2) #5
F09	INTERIOR FOOTING	16" x 16"	(2) #5
F10	STEP DOWN FOOTING	12" x 12"	(2) #5
F11	STEP DOWN FOOTING	16" x 16"	(2) #5

PAD SCHEDULE

MARK	TYPE	SIZE (W x L x D)	REBAR
P01	CONC. PAD	1'-0" x 1'-0" x 1'-0"	(2) #5 EA. WAY
P1.5	CONC. PAD	1'-6" x 1'-6" x 1'-0"	(2) #5 EA. WAY
P02	CONC. PAD	2'-0" x 2'-0" x 1'-0"	(3) #5 EA. WAY
P2.5	CONC. PAD	2'-6" x 2'-6" x 1'-0"	(3) #5 EA. WAY
P03	CONC. PAD	3'-0" x 3'-0" x 1'-4"	(4) #5 EA. WAY
P3.5	CONC. PAD	3'-6" x 3'-6" x 1'-4"	(5) #5 EA. WAY
P04	CONC. PAD	4'-0" x 4'-0" x 1'-4"	(6) #5 EA. WAY
P06	CONC. PAD	6'-0" x 6'-0" x 1'-8"	(10) #5 EA. WAY

WALL LEGEND:

- 4" FRAME WALL
- 6" FRAME WALL
- 8" CMU WALL

INDICATES POINT LOAD FROM ABOVE:

REBAR LOCATION:

- ONE STORY BLOCK WALLS TO HAVE #5 REBAR @ 6' O.C.
- TWO STORY BLOCK WALLS TO HAVE #5 REBAR @ 4' O.C.

GENERAL NOTES:

SEE GENERAL NOTES PAGE FOR BUILDING SPECIFICATIONS, CONSTRUCTION NOTES, SCOPE OF WORK AND DESIGN CRITERIA.

SEE ARCHITECTURAL PLANS FOR PLUMBING LOCATIONS

Structural Components Only
APEX Consulting Engineers BRD, LLC
Cert of Auth.#33881
JEFFREY L. VOGEL, PE #81235
4315 53RD AVE E. BRADENTON FL 34203
(941) 355-1900 FAX (941) 355-4641
JEFF@APEXENGINEER.COM

"THIS ITEM HAS BEEN ELECTRONICALLY SIGNED AND SEALED BY (JEFFREY VOGEL, PE) USING A SHA-1 AUTHENTICATION CODE FOR STRUCTURAL COMPONENTS ONLY AND DOES NOT INCLUDE "E" SHEET(S). PRINTED COPIES OF THIS DOCUMENT ARE NOT CONSIDERED SIGNED AND SEALED AND THE SHA-1 AUTHENTICATION CODE MUST BE VERIFIED ON ANY ELECTRONIC COPY"

Majher Residence:

7017 Longboat Dr. N.,
Longboat Key, FL 34228

WHILE EVERY ATTEMPT HAS BEEN MADE IN THE PREPARATION OF THESE DRAWINGS TO AVOID MISTAKES, THE DESIGNER CANNOT GUARANTEE AGAINST HUMAN ERROR. PRIOR TO THE COMMENCEMENT OF ANY WORK, CONTRACTOR/OWNER MUST VERIFY ALL CONDITIONS AND DIMENSIONS AT JOB SITE. THE CONTRACTOR/OWNER SHALL REPORT ALL DISCREPANCIES BEFORE BEGINNING WORK AND ASSUME RESPONSIBILITY FOR CORRECTIONS AFTER THAT POINT.

REVISION	DATE	TAC
PER TRUSS REVIEW	11/30/2023	A

BLDG PERMIT PLANS
FILE
Copy of Record

Digitally signed by Jeffrey L. Vogel
DN: CN=Jeffrey L. Vogel, dnQualifier=A01410D0000018443171CE8000A428DC,O=Apex Consulting Engineers, C=US
Reason: I am approving this document
Date: 2024.02.28 12:32:16-05'00'

RECEIVED
APR 2 - 2024
TOWN OF LONGBOAT KEY
Planning, Zoning & Building

SEAL

Date: 01/19/2021
Drawn by: RS
Job No.: 20-0470
Sheet:

S.2

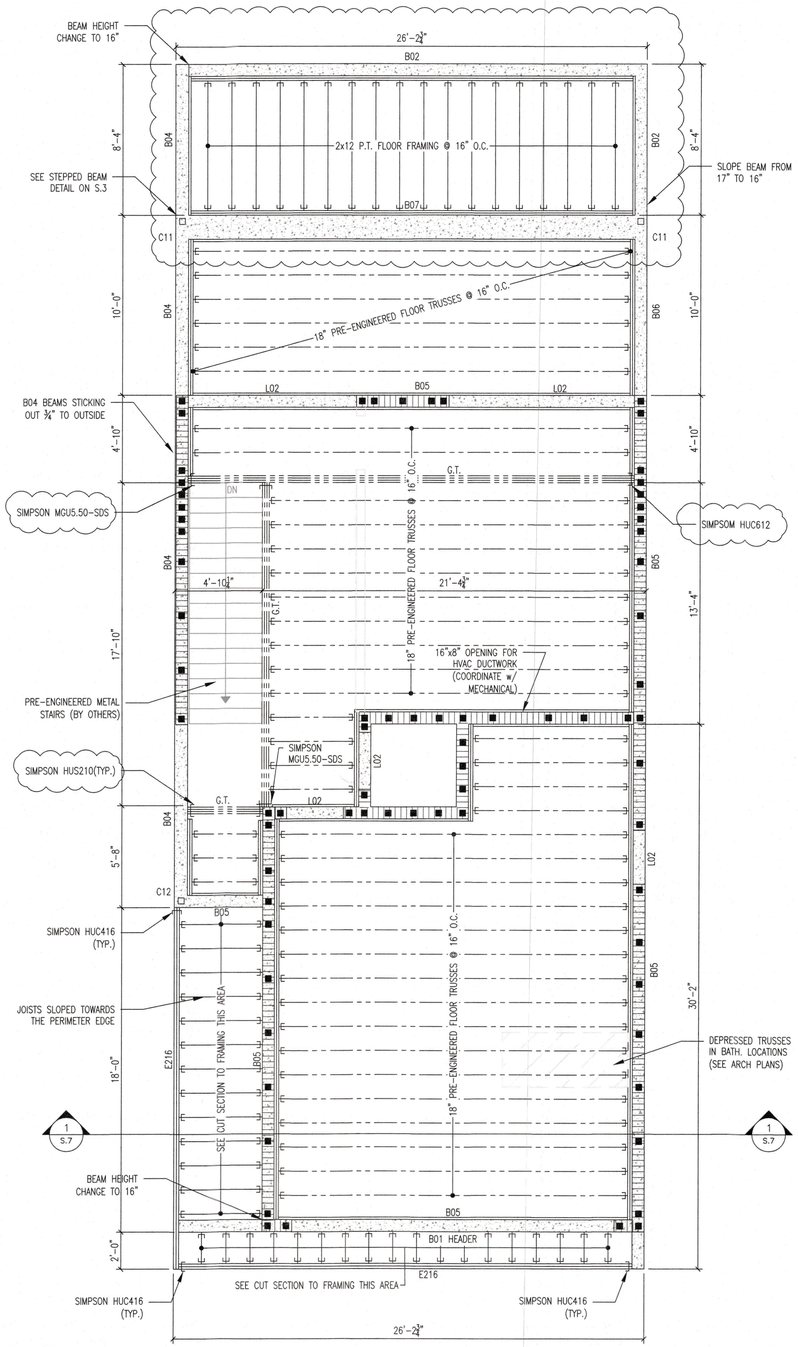

2nd FLOOR FRAMING PLAN

SCALE: 1/4" = 1'-0"

NOTES:
1. CONTRACTOR TO CONFIRM BUILDING ENVELOPE HEIGHTS.
2. SEE ARCHITECTURAL FOR BUILDING HEIGHTS AND ELEVATIONS.

A

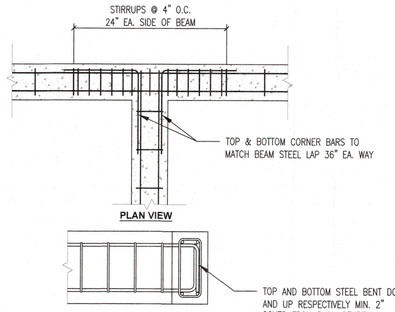

ALL STIRRUPS ARE CLOSED, SEE PLAN FOR SPACING & SIZES.
SEE PLAN FOR REINFORCING SIZES.
INTERSECTING BEAMS POURED AS ONE, NO JOINTS.

BEAM INTERSECTION DETAIL

SCALE: N.T.S.

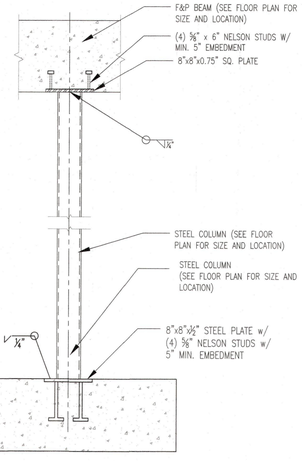

STEEL CONN. DETAIL

SCALE: N.T.S

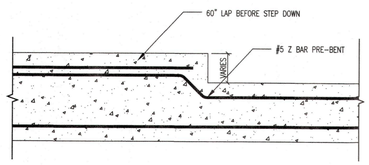

STEPPED-BEAM DETAIL

SCALE: N.T.S.

PRE-ENGINEERED TRUSS PLANS BY OTHERS TO BE REVIEWED & SIGNED BY ENGINEER OF RECORD BEFORE PERMIT ISSUANCE

LINTEL TYPES

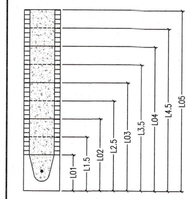

8" WIDE PRECAST LINTEL BLOCK w/ (1) #5 REBAR TOP & (1) #5 REBAR BOTTOM FILLED SOLID

*L01 LINTEL ONLY NEEDS (1) #5 REBAR

FORM & POUR TYPES

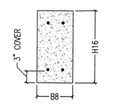

*EXAMPLE "B02"

MARK	TYPE	CONC. STRENGTH	STIRRUPS & SPACING	NOTES
B01	B8 H14 5T 5B (2)	5000 psi	#3 @ 4" O.C. 4" FROM ENDS & 10" O.C. ELSEWHERE	
B02	B8 H16 5T 7B (2)	5000 psi	#3 @ 4" O.C. 4" FROM ENDS & 10" O.C. ELSEWHERE	
B03	B8.75 H16 7T 5B (2)	5000 psi	#3 @ 4" O.C. 4" FROM ENDS & 10" O.C. ELSEWHERE	
B04	B8.75 H18 7T 5M 5B (2)	5000 psi	#3 @ 4" O.C. 4" FROM ENDS & 10" O.C. ELSEWHERE	
B05	B8 H18 5T 7B (2)	5000 psi	#3 @ 6.5" O.C. 4" FROM ENDS & 10" O.C. ELSEWHERE	
B06	B8 H18 7T 7B (2)	5000 psi	#3 @ 4" O.C. 4" FROM ENDS & 10" O.C. ELSEWHERE	
B07	B16 H18 5T 7M 7B (4)	5000 psi	#3 @ 4" O.C. 4" FROM ENDS & 8" O.C. ELSEWHERE	BOTTOM REBAR @ 3" FROM BOTT. & MIDDLE REBAR @ 6" FROM BOTT.
B08	B8 H18-24 5T 7B (2)	5000 psi	#3 @ 4" O.C. 4" FROM ENDS & 8" O.C. ELSEWHERE	SEE ARCH PLANS TO CONFIRM MIN./MAX. BEAM HEIGHTS

WOOD BEAM TYPES

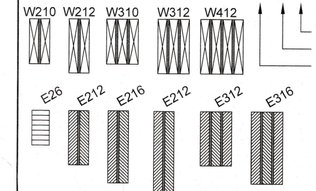

WOOD BEAM SCHEDULE

*ALL EXPOSED WOOD TO BE PRESSURE TREATED

MARK	TYPE	SIZE (W x D)	PLY	GRADE	NOTES
W210	SOLID SAWN	2"x10"	2	No. 2	
W212	SOLID SAWN	2"x12"	2	No. 2	
W310	SOLID SAWN	2"x10"	3	No. 2	
W312	SOLID SAWN	2"x12"	3	No. 2	
W412	SOLID SAWN	2"x12"	4	No. 2	
E26	ENGINEERED WOOD	3"x5.5"		MIN. 1.9 E	GLULAM PT
E212	ENGINEERED WOOD	3.5"x11.25"		MIN. 1.9 E	
E216	ENGINEERED WOOD	3.5"x16"		MIN. 1.9 E	
E222	ENGINEERED WOOD	3.5"x22"		MIN. 1.9 E	
E312	ENGINEERED WOOD	5.25"x11.25"		MIN. 1.9 E	
E316	ENGINEERED WOOD	5.25"x16"		MIN. 1.9 E	

COLUMN SCHEDULE

*ALL EXPOSED WOOD TO BE PRESSURE TREATED

MARK	TYPE	SIZE (W x D)	MARK	TYPE	SIZE (W x D)
C01	SOLID SAWN	4"x4"	C07	CMU COLUMN w/ (1) #5	8"x8"
C02	SOLID SAWN	6"x6"	C08	CMU COLUMN w/ (2) #5	8"x16"
C03	SOLID SAWN	8"x8"	C09	CMU COLUMN w/ (4) #5	12"x12"
C04	ENGINEERED WOOD	3.5"x3.5"	C10	CMU COLUMN w/ (4) #5	16"x16"
C05	ENGINEERED WOOD	3.5"x5.25"	C11	STEEL TUBE	4"x4"x0.375"
C06	ENGINEERED WOOD	5.5"x5.25"	C12	STEEL TUBE	4"x4"x0.25"

WALL LEGEND:

- 4" FRAME WALL
- 6" FRAME WALL
- 8" FRAME WALL
- 8" CMU WALL

INDICATES POINT LOAD FROM ABOVE:

REBAR LOCATION:

- SHEAR WALLS TO HAVE #5 REBAR @ 16" O.C. VERTICALLY & 16" HORIZONTALLY
- 2nd FLOOR & ABOVE CMU BLOCK WALLS TO HAVE #5 REBAR @ 4' O.C.

SHEAR WALL :

USE SIMPSON HITS OR (2) ST6224 TO MAKE SHEAR WALL (SEE FRAMING PLAN FOR LOCATIONS)

RECEIVED
APR 2 - 2024
TOWN OF LONGBOAT KEY
Planning, Zoning & Building

GENERAL NOTES:

SEE GENERAL NOTES PAGE FOR BUILDING SPECIFICATIONS, CONSTRUCTION NOTES, SCOPE OF WORK AND DESIGN CRITERIA.

PRE-ENGINEERED TRUSS PLANS BY OTHERS TO BE REVIEWED & SIGNED BY ENGINEER OF RECORD BEFORE PERMIT ISSUANCE.

ALL GIRDER TRUSSES SET ON CMU WALLS TO HAVE FILLED CELLS DIRECTLY BELOW

Structural Components Only
APEX Consulting Engineers BRD, LLC
JEFFREY L. VOGEL, PE #81235
4115 E. LAKE MIRROR CIRCLE, VENICE, FL 34293
Cert.of Auth.#33881 TEL (941) 365-1900 FAX (888) 365-4941
JEFF@APEXENGINEER.COM

THIS ITEM HAS BEEN ELECTRONICALLY SIGNED AND SEALED BY (JEFFREY VOGEL, PE) USING A SHA-1 AUTHENTICATION CODE FOR STRUCTURAL COMPONENTS ONLY AND DOES NOT INCLUDE "E" SHEET(S). PRINTED COPIES OF THIS DOCUMENT ARE NOT CONSIDERED SIGNED AND SEALED AND THE SHA-1 AUTHENTICATION CODE MUST BE VERIFIED ON ANY ELECTRONIC COPY

Majher Residence:

7017 Longboat Dr. N.,
Longboat Key, FL 34228

WHILE EVERY ATTEMPT HAS BEEN MADE IN THE PREPARATION OF THESE DRAWINGS TO AVOID MISTAKES, THE DESIGNER CANNOT GUARANTEE AGAINST SOME. PRIOR TO THE COMMENCEMENT OF ANY WORK, CONTRACTOR/OWNER MUST VERIFY ALL CONDITIONS AND DIMENSIONS AT JOB SITE. IT IS CONTRACTOR/OWNER'S SOLE RESPONSIBILITY TO REPORT ALL DISCREPANCIES BETWEEN DRAWINGS AND EXISTING CONDITIONS TO THE DESIGNER PRIOR TO COMMENCING WORK. © 2014 APEX LLC.

TAG	DATE	REVISION
A	11/10/2023	PER TRUSS REVIEW

JEFFREY L. VOGEL LICENSE No 81235 STATE OF FLORIDA PROFESSIONAL ENGINEER

BLDG PERMIT PLANS
FILE
Copy of Record

SEAL

Date: 01/19/2021
Drawn by: RS
Job No.: 20-0470
Sheet:

S.3

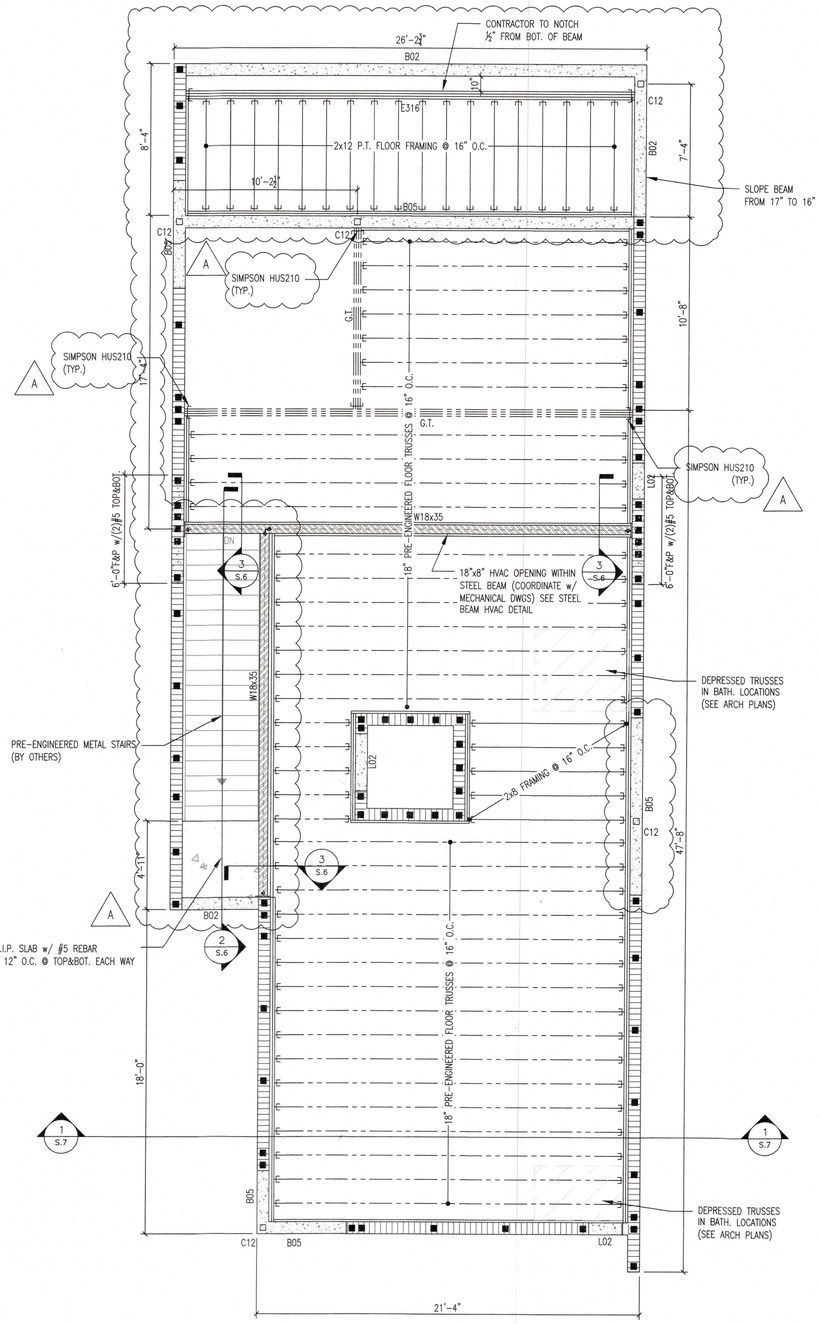

3rd FLOOR FRAMING PLAN

SCALE: 1/4" = 1'-0"

NOTES:
1. CONTRACTOR TO CONFIRM BUILDING ENVELOPE HEIGHTS.
2. SEE ARCHITECTURAL FOR BUILDING HEIGHTS AND ELEVATIONS.

PRE-ENGINEERED TRUSS PLANS BY OTHERS TO BE REVIEWED & SIGNED BY ENGINEER OF RECORD BEFORE PERMIT ISSUANCE

LINTEL TYPES

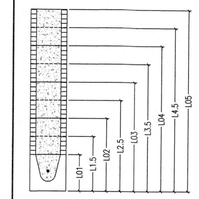

8" WIDE PRECAST LINTEL BLOCK w/ (1) #5 REBAR TOP & (1) #5 REBAR BOTTOM FILLED SOLID

*L01 LINTEL ONLY NEEDS (1) #5 REBAR

FORM & POUR TYPES

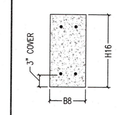

*EXAMPLE "B02"

MARK	TYPE	CONC. STRENGTH	STIRRUPS & SPACING	NOTES
B01	B8 H14 5T 5B (2)	5000 psi	#3 @ 4" O.C. 4' FROM ENDS & 10" O.C. ELSEWHERE	
B02	B8 H16 5T 7B (2)	5000 psi	#3 @ 4" O.C. 4' FROM ENDS & 10" O.C. ELSEWHERE	
B03	B8.75 H16 7T 5B (2)	5000 psi	#3 @ 4" O.C. 4' FROM ENDS & 10" O.C. ELSEWHERE	
B04	B8.75 H18 7T 5M 5B (2)	5000 psi	#3 @ 4" O.C. 4' FROM ENDS & 10" O.C. ELSEWHERE	
B05	B8 H18 5T 7B (2)	5000 psi	#3 @ 65" O.C. 4' FROM ENDS & 10" O.C. ELSEWHERE	
B06	B8 H18 7T 7B (2)	5000 psi	#3 @ 4" O.C. 4' FROM ENDS & 10" O.C. ELSEWHERE	
B07	B16 H18 5T 7M 7B (4)	5000 psi	#3 @ 4" O.C. 4' FROM ENDS & 8" O.C. ELSEWHERE	BOTTOM REBAR @ 3" FROM BOTT. & MIDDLE REBAR @ 8" FROM BOTT.
B08	B8 H18-24 5T 7B (2)	5000 psi	#3 @ 4" O.C. 4' FROM ENDS & 10" O.C. ELSEWHERE	SEE ARCH PLANS TO CONFIRM MIN./MAX. BEAM HEIGHTS

WOOD BEAM TYPES

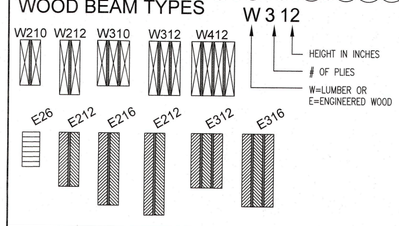

WOOD BEAM SCHEDULE

*ALL EXPOSED WOOD TO BE PRESSURE TREATED

MARK	TYPE	SIZE (W x D)	PLY	GRADE	NOTES
W210	SOLID SAWN	2"x10"	2	No. 2	
W212	SOLID SAWN	2"x12"	2	No. 2	
W310	SOLID SAWN	2"x10"	3	No. 2	
W312	SOLID SAWN	2"x12"	3	No. 2	
W412	SOLID SAWN	2"x12"	4	No. 2	
E26	ENGINEERED WOOD	3"x5.5"		MIN. 1.9 E	GLULAM PT
E212	ENGINEERED WOOD	3.5"x11.25"		MIN. 1.9 E	
E216	ENGINEERED WOOD	3.5"x16"		MIN. 1.9 E	
E222	ENGINEERED WOOD	3.5"x22"		MIN. 1.9 E	
E312	ENGINEERED WOOD	5.25"x11.25"		MIN. 1.9 E	
E316	ENGINEERED WOOD	5.25"x16"		MIN. 1.9 E	

COLUMN SCHEDULE

*ALL EXPOSED WOOD TO BE PRESSURE TREATED

MARK	TYPE	SIZE (W x D)	MARK	TYPE	SIZE (W x D)
C01	SOLID SAWN	4"x4"	C07	CMU COLUMN w/ (1) #5	8"x8"
C02	SOLID SAWN	6"x6"	C08	CMU COLUMN w/ (2) #5	8"x16"
C03	SOLID SAWN	8"x8"	C09	CMU COLUMN w/ (4) #5	12"x12"
C04	ENGINEERED WOOD	3.5"x3.5"	C10	CMU COLUMN w/ (4) #5	16"x16"
C05	ENGINEERED WOOD	3.5"x5.25"	C11	STEEL TUBE	4"x4"x0.375"
C06	ENGINEERED WOOD	5.5"x5.25"	C12	STEEL TUBE	4"x4"x0.25"

WALL LEGEND:

- 4" FRAME WALL
- 6" FRAME WALL
- 8" FRAME WALL
- 8" CMU WALL

INDICATES POINT LOAD FROM ABOVE:

REBAR LOCATION:

- SHEAR WALLS TO HAVE #5 REBAR @ 16" O.C. VERTICALLY & 16" HORIZONTALLY
- 2nd FLOOR & ABOVE CMU BLOCK WALLS TO HAVE #5 REBAR @ 4' O.C.

SHEAR WALL :

USE SIMPSON HTT5 OR (2) ST6224 TO MAKE SHEAR WALL (SEE FRAMING PLAN FOR LOCATIONS)

RECEIVED
APR 2 - 2024
TOWN OF LONGBOAT KEY
Planning & Building

GENERAL NOTES:

SEE GENERAL NOTES PAGE FOR BUILDING SPECIFICATIONS, CONSTRUCTION NOTES, SCOPE OF WORK AND DESIGN CRITERIA.

PRE-ENGINEERED TRUSS PLANS BY OTHERS TO BE REVIEWED & SIGNED BY ENGINEER OF RECORD BEFORE PERMIT ISSUANCE.

ALL GIRDER TRUSSES SET ON CMU WALLS TO HAVE FILLED CELLS DIRECTLY BELOW

Structural Components Only

APEX Consulting Engineers BRD, LLC
JEFFREY L. VOGEL, PE #81235
5383 AVE. F, BRADENTON FL 34203
TEL: (941) 545-1961 FAX: (866) 844-6041
JEFF@APEXENGINEER.COM
Cert. of Auth.#33881

THIS ITEM HAS BEEN ELECTRONICALLY SIGNED AND SEALED BY (JEFFREY VOGEL, PE) USING A SHA-1 AUTHENTICATION CODE FOR STRUCTURAL COMPONENTS ONLY AND DOES NOT INCLUDE "E" SHEET(S). PRINTED COPIES OF THIS DOCUMENT ARE NOT CONSIDERED SIGNED AND SEALED AND THE SHA-1 AUTHENTICATION CODE MUST BE VERIFIED ON ANY ELECTRONIC COPY

Majher Residence:

7017 Longboat Dr. N.,
Longboat Key, FL 34228

THESE DRAWINGS ARE THE PROPERTY OF APEX CONSULTING ENGINEERS BRD, LLC AND SHALL NOT BE USED IN WHOLE OR IN PART FOR ANY OTHER PROJECT WITHOUT THE WRITTEN AUTHORIZATION OF APEX CONSULTING ENGINEERS BRD, LLC. ANY UNAUTHORIZED USE OF THESE DRAWINGS SHALL BE AT THE USER'S SOLE RISK AND WITHOUT LIABILITY TO APEX CONSULTING ENGINEERS BRD, LLC. THE CONTRACTOR SHALL CHECK AND VERIFY ALL DIMENSIONS AND CONDITIONS AT THE JOB SITE. THE CONTRACTOR SHALL NOTIFY THE ENGINEER OF ANY DISCREPANCIES BEFORE PROCEEDING WITH THE WORK. DO NOT SCALE DRAWINGS. ANY ATTEMPT TO DO SO SHALL BE AT THE CONTRACTOR'S RISK. BY THE COMMENCEMENT OF ANY WORK, CONTRACTOR/OWNER MUST VERIFY ALL CONDITIONS AND DIMENSIONS AT JOB SITE. NO CONTRACTOR/OWNER SHALL PROCEED TO THE COMMENCEMENT OF ANY WORK, CONTRACTOR/OWNER MUST VERIFY ALL CONDITIONS AND DIMENSIONS AT JOB SITE. NO CONTRACTOR/OWNER SHALL PROCEED WITH ANY CONSTRUCTION WORK UNTIL ALL DISCREPANCIES HAVE BEEN RESOLVED. DO NOT SCALE DRAWINGS. ANY ATTEMPT TO DO SO SHALL BE AT THE CONTRACTOR'S RISK. BY THE COMMENCEMENT OF ANY WORK, CONTRACTOR/OWNER SHALL PROCEED TO THE COMMENCEMENT OF ANY WORK, CONTRACTOR/OWNER MUST VERIFY ALL CONDITIONS AND DIMENSIONS AT JOB SITE. NO CONTRACTOR/OWNER SHALL PROCEED WITH ANY CONSTRUCTION WORK UNTIL ALL DISCREPANCIES HAVE BEEN RESOLVED. DO NOT SCALE DRAWINGS. ANY ATTEMPT TO DO SO SHALL BE AT THE CONTRACTOR'S RISK. BY THE COMMENCEMENT OF ANY WORK, CONTRACTOR/OWNER SHALL PROCEED TO THE COMMENCEMENT OF ANY WORK, CONTRACTOR/OWNER MUST VERIFY ALL CONDITIONS AND DIMENSIONS AT JOB SITE. NO CONTRACTOR/OWNER SHALL PROCEED WITH ANY CONSTRUCTION WORK UNTIL ALL DISCREPANCIES HAVE BEEN RESOLVED. DO NOT SCALE DRAWINGS. ANY ATTEMPT TO DO SO SHALL BE AT THE CONTRACTOR'S RISK. BY THE COMMENCEMENT OF ANY WORK, CONTRACTOR/OWNER SHALL PROCEED TO THE COMMENCEMENT OF ANY WORK, CONTRACTOR/OWNER MUST VERIFY ALL CONDITIONS AND DIMENSIONS AT JOB SITE. NO CONTRACTOR/OWNER SHALL PROCEED WITH ANY CONSTRUCTION WORK UNTIL ALL DISCREPANCIES HAVE BEEN RESOLVED. DO NOT SCALE DRAWINGS. ANY ATTEMPT TO DO SO SHALL BE AT THE CONTRACTOR'S RISK. BY THE COMMENCEMENT OF ANY WORK, CONTRACTOR/OWNER SHALL PROCEED TO THE COMMENCEMENT OF ANY WORK, CONTRACTOR/OWNER MUST VERIFY ALL CONDITIONS AND DIMENSIONS AT JOB SITE. NO CONTRACTOR/OWNER SHALL PROCEED WITH ANY CONSTRUCTION WORK UNTIL ALL DISCREPANCIES HAVE BEEN RESOLVED.

TAG	DATE	REVISION	REASON
A	11/10/2023		PER TRUSS REVIEW

JEFFREY L. VOGEL LICENSE No. 81235 STATE OF FLORIDA PROFESSIONAL ENGINEER

SEAL

BLDG PERMIT PLANS FILE Copy of Record

Date: 01/19/2021
Drawn by: RS
Job No.: 20-0470
Sheet:

S.4

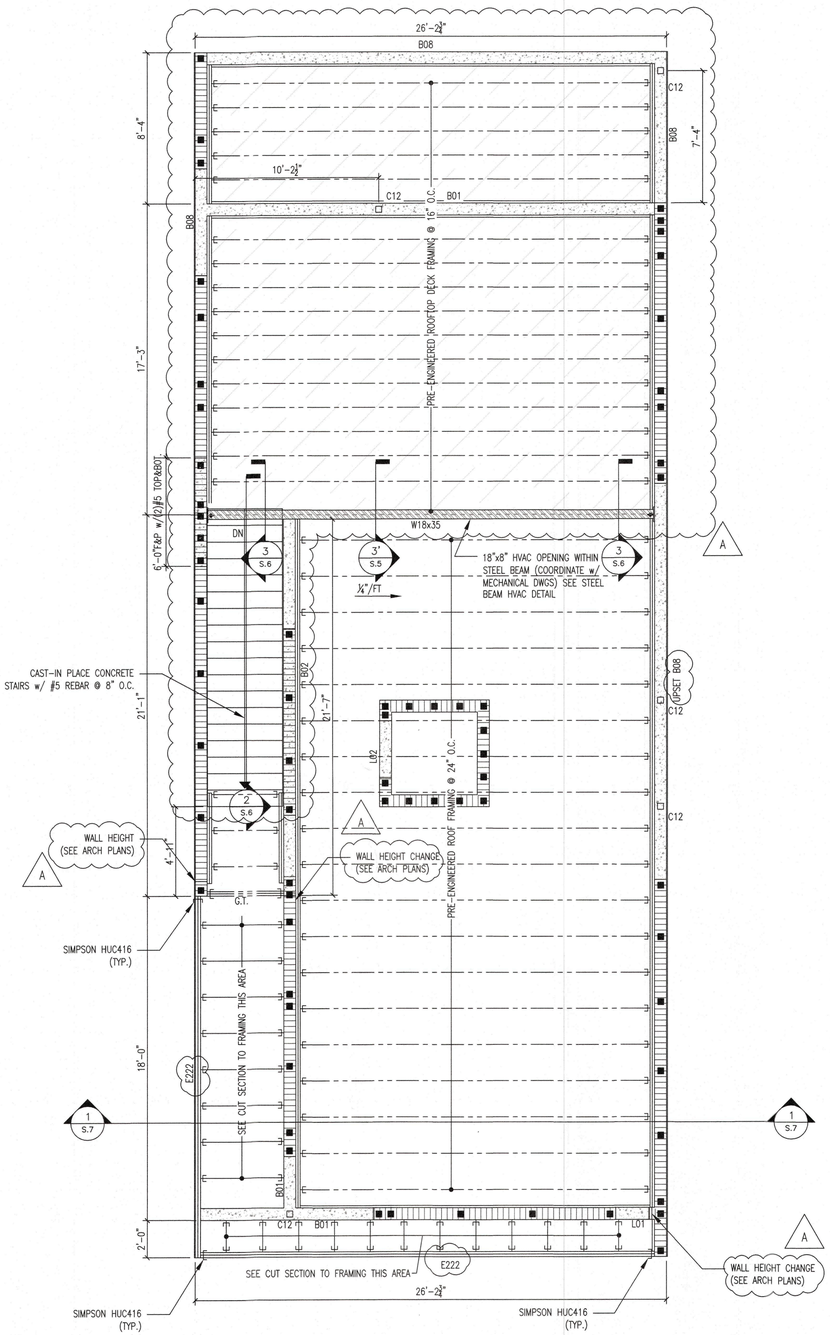

ROOF FRAMING PLAN

SCALE: 1/4" = 1'-0"

NOTES:
1. CONTRACTOR TO CONFIRM BUILDING ENVELOPE HEIGHTS.
2. SEE ARCHITECTURAL FOR BUILDING HEIGHTS AND ELEVATIONS.

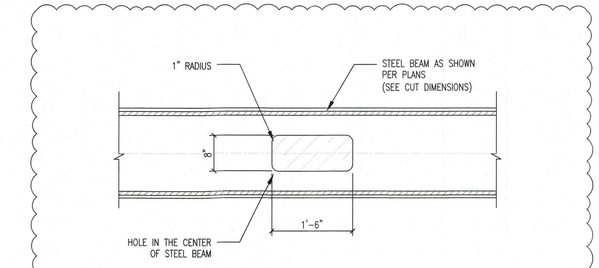

STEEL BEAM HVAC DETAIL

SCALE: 3/4" = 1'-0"

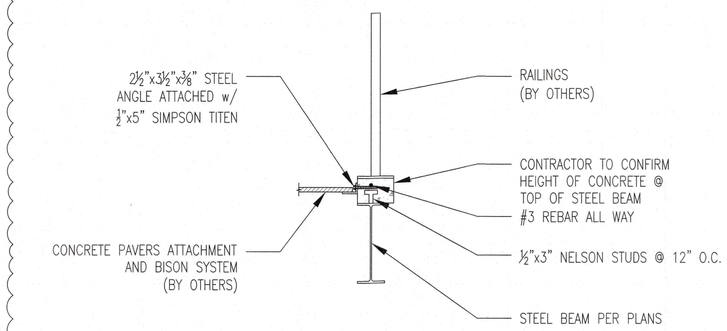

3 CUT SECTION

SCALE: 3/4" = 1'-0"

PRE-ENGINEERED TRUSS PLANS BY OTHERS TO BE REVIEWED & SIGNED BY ENGINEER OF RECORD BEFORE PERMIT ISSUANCE

LINTEL TYPES

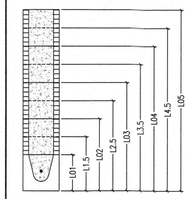

8" WIDE PRECAST LINTEL BLOCK w/ (1) #5 REBAR TOP & (1) #5 REBAR BOTTOM FILLED SOLID

*L01 LINTEL ONLY NEEDS (1) #5 REBAR

FORM & POUR TYPES

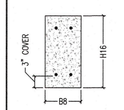

B8 H16 5T 5B (2)

- # OF REBAR PER LAYER
- REBAR SIZE @ BOTTOM
- REBAR SIZE @ TOP
- HEIGHT IN INCHES
- WIDTH IN INCHES

*EXAMPLE "B02"

MARK	TYPE	CONC. STRENGTH	STIRRUPS & SPACING	NOTES
B01	B8 H14 5T 5B (2)	5000 psi	#3 @ 4" O.C. 4' FROM ENDS & 10" O.C. ELSEWHERE	
B02	B8 H16 5T 7B (2)	5000 psi	#3 @ 4" O.C. 4' FROM ENDS & 10" O.C. ELSEWHERE	
B03	B8.75 H16 7T 5B (2)	5000 psi	#3 @ 4" O.C. 4' FROM ENDS & 10" O.C. ELSEWHERE	
B04	B8.75 H18 7T 5M 5B (2)	5000 psi	#3 @ 4" O.C. 4' FROM ENDS & 10" O.C. ELSEWHERE	
B05	B8 H18 5T 7B (2)	5000 psi	#3 @ 4.5" O.C. 4' FROM ENDS & 10" O.C. ELSEWHERE	
B06	B8 H18 7T 7B (2)	5000 psi	#3 @ 4" O.C. 4' FROM ENDS & 10" O.C. ELSEWHERE	
B07	B16 H18 5T 7M 7B (4)	5000 psi	#3 @ 4" O.C. 4' FROM ENDS & 8" O.C. ELSEWHERE	BOTTOM REBAR @ 3" FROM BOTT. & MIDDLE REBAR @ 6" FROM BOTT.
B08	B8 H18-24 5T 7B (2)	5000 psi	#3 @ 4" O.C. 4' FROM ENDS & 8" O.C. ELSEWHERE	SEE ARCH PLANS TO CONFIRM MIN./MAX. BEAM HEIGHTS

WOOD BEAM TYPES

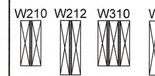

W 3 12

- HEIGHT IN INCHES
- # OF PLIES
- W=LUMBER OR E=ENGINEERED WOOD

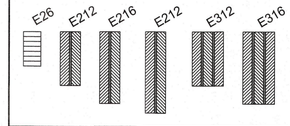

WOOD BEAM SCHEDULE

*ALL EXPOSED WOOD TO BE PRESSURE TREATED

MARK	TYPE	SIZE (W x D)	PLY	GRADE	NOTES
W210	SOLID SAWN	2"x10"	2	No. 2	
W212	SOLID SAWN	2"x12"	2	No. 2	
W310	SOLID SAWN	2"x10"	3	No. 2	
W312	SOLID SAWN	2"x12"	3	No. 2	
W412	SOLID SAWN	2"x12"	4	No. 2	
E26	ENGINEERED WOOD	3"x5.5"		MIN. 1.9 E	GLULAM PT
E212	ENGINEERED WOOD	3.5"x11.25"		MIN. 1.9 E	
E216	ENGINEERED WOOD	3.5"x16"		MIN. 1.9 E	
E222	ENGINEERED WOOD	3.5"x22"		MIN. 1.9 E	
E312	ENGINEERED WOOD	5.25"x11.25"		MIN. 1.9 E	
E316	ENGINEERED WOOD	5.25"x16"		MIN. 1.9 E	

COLUMN SCHEDULE

*ALL EXPOSED WOOD TO BE PRESSURE TREATED

MARK	TYPE	SIZE (W x D)	MARK	TYPE	SIZE (W x D)
C01	SOLID SAWN	4"x4"	C07	CMU COLUMN w/ (1) #5	8"x8"
C02	SOLID SAWN	6"x6"	C08	CMU COLUMN w/ (2) #5	8"x16"
C03	SOLID SAWN	8"x8"	C09	CMU COLUMN w/ (4) #5	12"x12"
C04	ENGINEERED WOOD	3.5"x3.5"	C10	CMU COLUMN w/ (4) #5	16"x16"
C05	ENGINEERED WOOD	3.5"x5.25"	C11	STEEL TUBE	4"x4"x0.375"
C06	ENGINEERED WOOD	5.5"x5.25"	C12	STEEL TUBE	4"x4"x0.25"

WALL LEGEND:

- 4" FRAME WALL
- 6" FRAME WALL
- 8" FRAME WALL
- 8" CMU WALL

INDICATES POINT LOAD FROM ABOVE:

REBAR LOCATION:

- SHEAR WALLS TO HAVE #5 REBAR @ 16" O.C. VERTICALLY & 16" HORIZONTALLY
- 2nd FLOOR & ABOVE CMU BLOCK WALLS TO HAVE #5 REBAR @ 4' O.C.

SHEAR WALL :

USE SIMPSON HTT5 OR (2) ST6224 TO MAKE SHEAR WALL (SEE FRAMING PLAN FOR LOCATIONS)

GENERAL NOTES:

SEE GENERAL NOTES PAGE FOR BUILDING SPECIFICATIONS, CONSTRUCTION NOTES, SCOPE OF WORK AND DESIGN CRITERIA.

PRE-ENGINEERED TRUSS PLANS BY OTHERS TO BE REVIEWED & SIGNED BY ENGINEER OF RECORD BEFORE PERMIT ISSUANCE.

ALL GIRDER TRUSSES SET ON CMU WALLS TO HAVE FILLED CELLS DIRECTLY BELOW

Structural Components Only

APEX Consulting Engineers, BRD, LLC

JEFFREY L. VOGEL, PE #81235
6151 LAKE OSPREY DR. SARASOTA, FL 34240
TEL (941) 365-1900 FAX (888)365-4041
JEFF@APEXENGINEER.COM

Cert. of Auth.#33881

"THIS ITEM HAS BEEN ELECTRONICALLY SIGNED AND SEALED BY (JEFFREY VOGEL, PE) USING A SHA-1 AUTHENTICATION CODE FOR STRUCTURAL COMPONENTS ONLY AND DOES NOT INCLUDE "E" SHEET(S). PRINTED COPIES OF THIS DOCUMENT ARE NOT CONSIDERED SIGNED AND SEALED AND THE SHA-1 AUTHENTICATION CODE MUST BE VERIFIED ON ANY ELECTRONIC COPY"

Majher Residence:

7017 Longboat Dr. N.,
Longboat Key, FL 34228

WHILE EVERY EFFORT HAS BEEN MADE IN THE PREPARATION OF THESE DRAWINGS, TO AVOID ERRORS, THE CONTRACTOR SHALL CONFIRM ALL DIMENSIONS AND CONDITIONS AT JOB SITE. CONTRACTOR AND SUBCONTRACTOR MUST VERIFY ALL CONDITIONS AND DIMENSIONS AT JOB SITE PRIOR TO THE COMMENCEMENT OF ANY WORK. CONTRACTOR AND SUBCONTRACTOR ARE RESPONSIBLE TO REPORT ALL DISCREPANCIES BETWEEN DRAWINGS AND EXISTING CONDITIONS TO THE DESIGNER PRIOR TO COMMENCING WORK. © 2014 APEX LLC

TAC	DATE	REVISION
A	11/10/2023	PER TRUSS REVIEW

JEFFREY L. VOGEL LICENSE No 81235 STATE OF FLORIDA PROFESSIONAL ENGINEER

SEAL

RECEIVED
APR 2 - 2024
TOWN OF L KEY
Planning, Zoning & Building

Date: 01/19/2021
Drawn by: RS
Job No.: 20-0470
Sheet: S.5

BUILDING PERMIT PLANS
FILE
Copy of Record

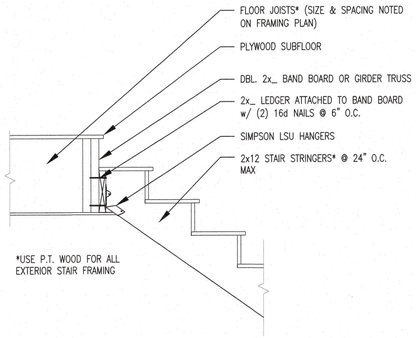

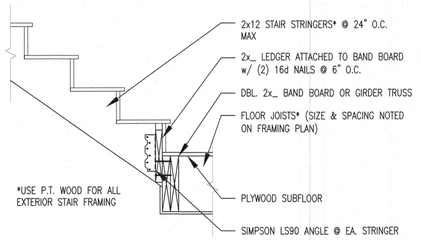

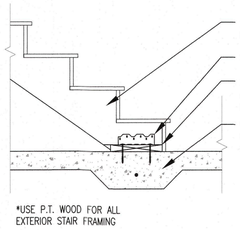

STAIRS DETAILS
SCALE: N.T.S

ALTERNATE BUCK STRIP ATTACHMENTS:

IF A MULTIPLE BUCK IS REQUIRED THE ADDITIONAL LUMBER, UP TO AND INCLUDING 1-1/2" IN THICKNESS, SHALL BE NAILED AT 12" O.C. WITH 10d NAILS, (8d ACCEPTABLE FOR 1x's)

WHEN ADDITIONAL LAYERS ARE NEEDED, IT IS ADVISED THAT A BUCK INSPECTION SHALL BE PASSED PRIOR TO ADDING ADDITIONAL LAYERS WITHOUT MASONRY SCREWS.

ANY BUCK STRIP GREATER THAN OR EQUAL TO 6" WILL NOT BE ALLOWED. ANY SPACE BETWEEN WINDOW/DOOR AND MASONRY SHALL BE FILLED AND CONSTRUCTED PER MIXED CONSTRUCTION DETAIL WITH A MIN OF (1) 5/8" x 6" ANCHOR BOLTS INTO SLAB AND CONCRETE ABOVE.

5/8" x 6" TITEN HD'S, ARE ACCEPTABLE SUBSTITUTIONS FOR ANCHOR BOLTS IN THIS SPECIFIC SITUATION.

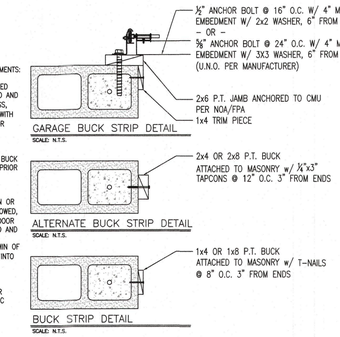

BUCKING DETAILS
SCALE: N.T.S

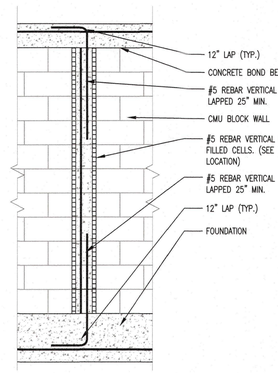

FILLED CELL DETAIL
SCALE: N.T.S

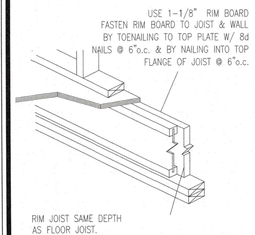

RIM BOARD

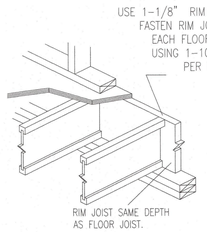

RIM BOARD

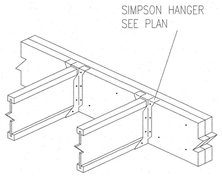

FLOOR BEAM

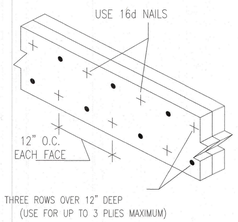

NAILED CONNECTION

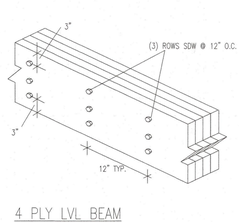

4 PLY LVL BEAM CONNECTION DETAIL

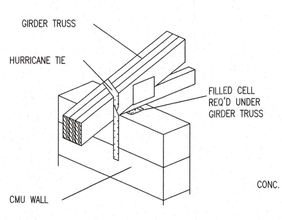

GIRDER DETAIL

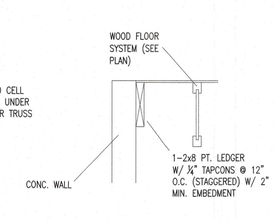

LEDGER DETAIL

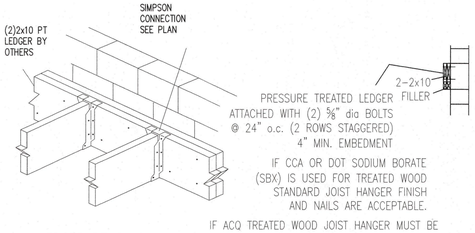

LEDGER BEARING

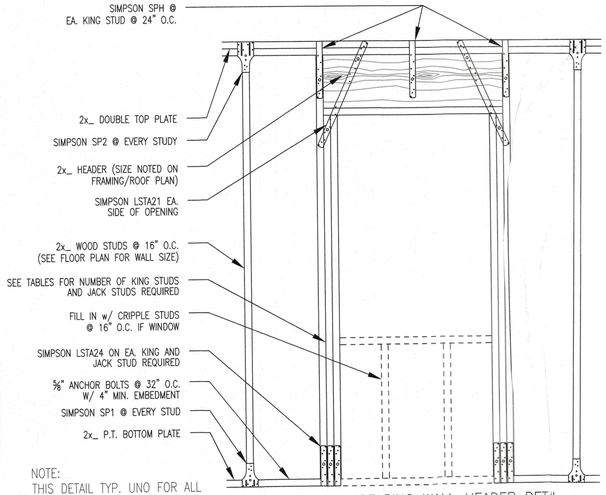

NOTE:
THIS DETAIL TYP. UNO FOR ALL INTERIOR & EXTERIOR WOOD FRAME BEARING WALL OPENINGS

BEARING WALL HEADER DETAIL
SCALE: N.T.S

NO. OF REQ'D KING STUDS			NO. OF REQ'D JACK STUDS		
	10' WALL	8' WALL	(SUPPORTING ROOF & CEILING)	(SUPPORTING ROOF, CEILING & ONE CENTER BEARING FLOOR)	(SUPPORTING ROOF, CEILING & ONE CLEAR SPAN FLOOR)
HEADER SPAN	NO. OF STUDS		NO. OF STUDS	NO. OF STUDS	NO. OF STUDS
0 to 2'	1	1	1	1	1
> 2' to 4'	1	1	1	1	2
> 4' to 6'	2	1	1	2	2
> 6' to 8'	2	2	2	2	3
> 8' to 10'	3	2	2	3	3
> 10' to 12'	3	2	2	3	4
> 12' to 14'	4	2	3	4	4
> 14' to 16'	4	3	3	4	5
> 16' to 18'	5	3	3	4	6
> 18' to 20'	5	3	3	5	6

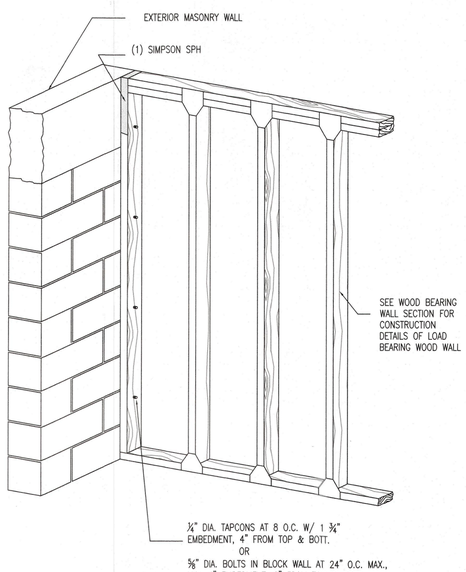

MIXED CONSTRUCTION DETAIL
SCALE: N.T.S

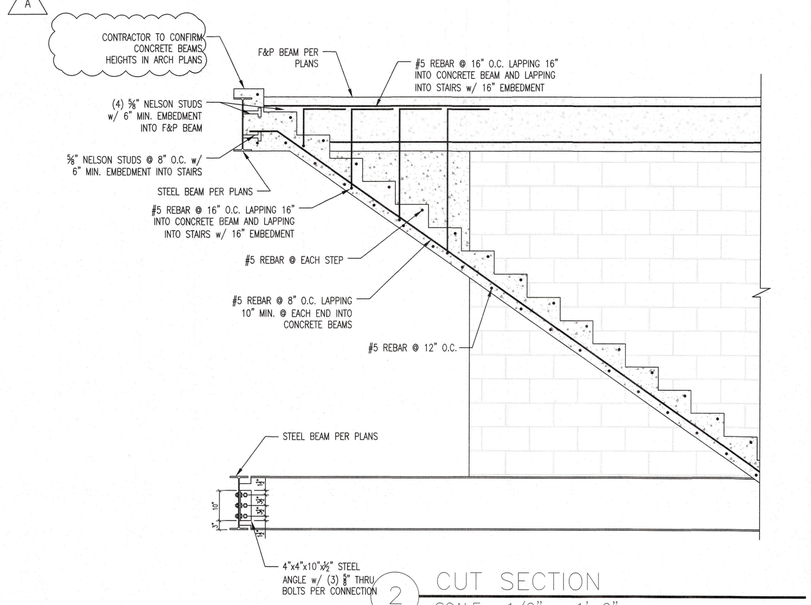

2 CUT SECTION
SCALE: 1/2" = 1'-0"

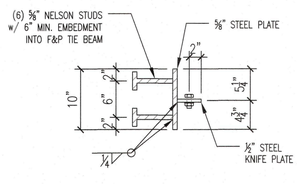

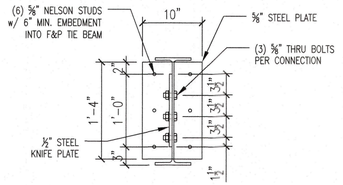

3 STEEL KNIFE PLATE DETAIL
SCALE: 1" = 1'-0"

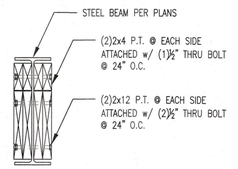

PAD OUT DETAIL
SCALE: 1" = 1'-0"

BLDG PERMIT PLANS
FILE
Copy of Record

BLDG PERMIT PLANS
FILE

RECEIVED
APR 2 - 2024
TOWN OF LONGBOAT KEY
Planning, Zoning & Building

Structural Components Only

APEX Consulting Engineers BRD, LLC
JEFFREY L. VOGEL, PE #81235
Cert. of Auth.#33881 • 515 53RD AVE E, BRADENTON FL 34203
TEL: (941) 896-1313 • FAX: (941) 896-4481
JEFF@APEXENGINEER.COM

"THIS ITEM HAS BEEN ELECTRONICALLY SIGNED AND SEALED BY (JEFFREY VOGEL, PE) USING A SHA-1 AUTHENTICATION CODE FOR STRUCTURAL COMPONENTS ONLY AND DOES NOT INCLUDE "E" SHEET(S). PRINTED COPIES OF THIS DOCUMENT ARE NOT CONSIDERED SIGNED AND SEALED AND THE SHA-1 AUTHENTICATION CODE MUST BE VERIFIED ON ANY ELECTRONIC COPY"

Majher Residence:

7017 Longboat Dr. N.,
Longboat Key, FL 34228

WHILE EVERY ATTEMPT HAS BEEN MADE IN THE PREPARATION OF THESE DRAWINGS TO AVOID MISTAKES, THE DESIGNER CANNOT GUARANTEE AGAINST HUMAN ERROR. THE CONTRACTOR IS RESPONSIBLE FOR ALL DIMENSIONS AND CONDITIONS ON THE JOB AND SHALL NOTIFY THE DESIGNER OF ANY DISCREPANCIES BEFORE PROCEEDING WITH THE WORK. THE CONTRACTOR SHALL REPORT ALL DISCREPANCIES BETWEEN DRAWINGS AND EXISTING CONDITIONS TO THE DESIGNER PRIOR TO COMMENCING WORK. © 2014 APEX LLC

TAG	DATE	REASON
A	11/10/2023	PER TRUSS REVIEW

REVISION

SEAL

JEFFREY L. VOGEL
LICENSE
No. 81235
STATE OF FLORIDA
PROFESSIONAL ENGINEER

Date: 01/19/2021
Drawn by: RS
Job No.: 20-0470
Sheet: S.6

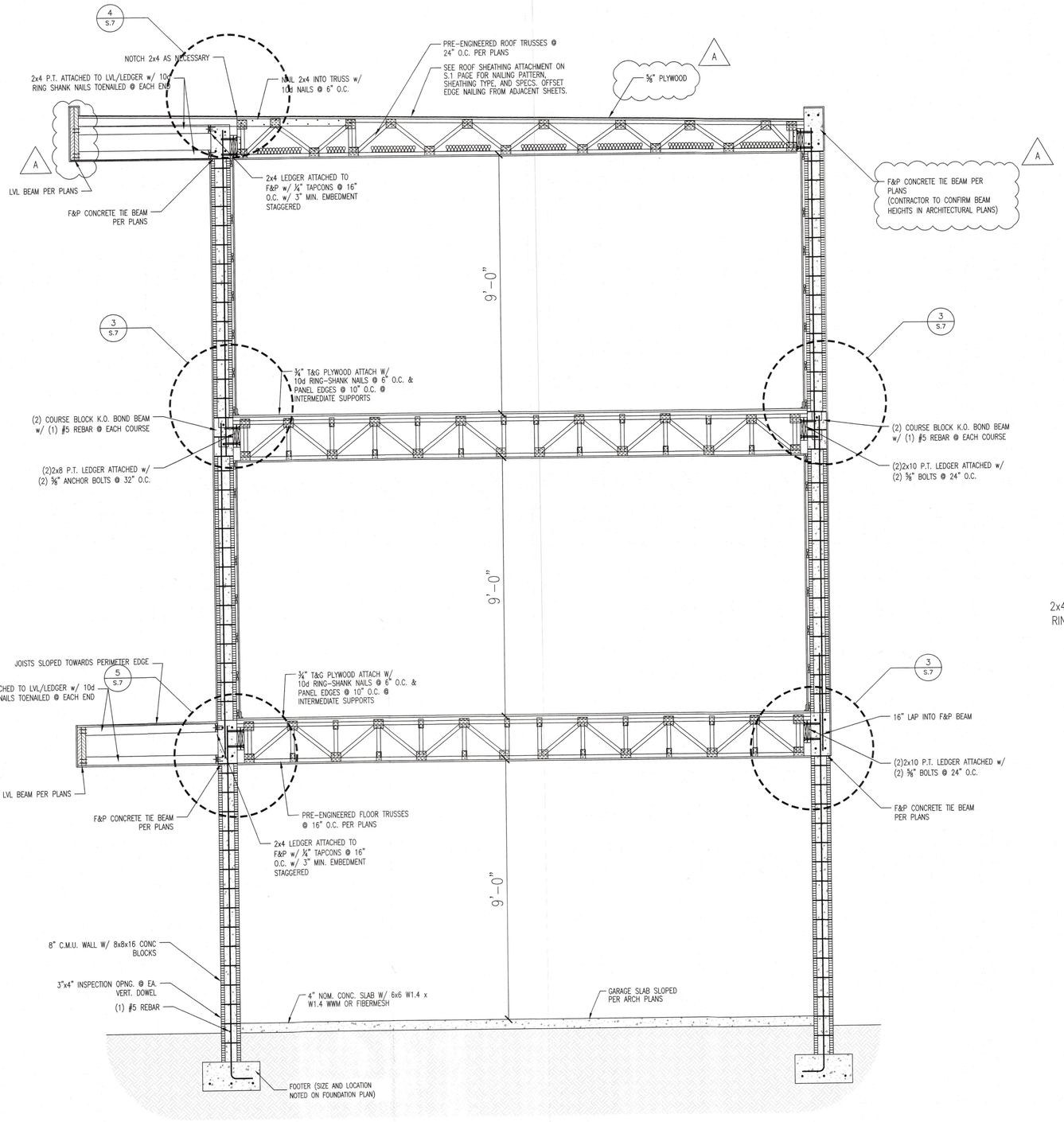

1 CUT SECTION
SCALE: 1/2" = 1'-0"

NOTES:
1. CONTRACTOR TO CONFIRM BUILDING ENVELOPE HEIGHTS.
2. SEE ARCHITECTURAL FOR BUILDING HEIGHTS AND ELEVATIONS.

A

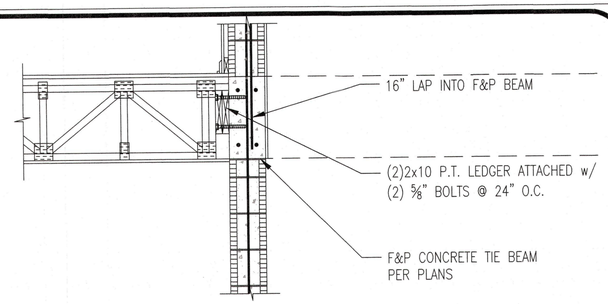

3 CONNECTION DETAIL
SCALE: 3/4"=1'-0"

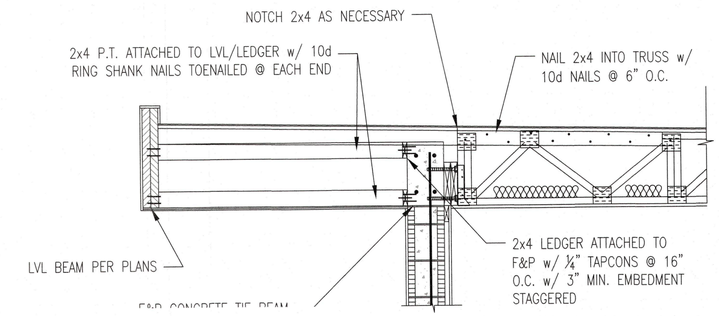

4 CONNECTION DETAIL
SCALE: 3/4"=1'-0"

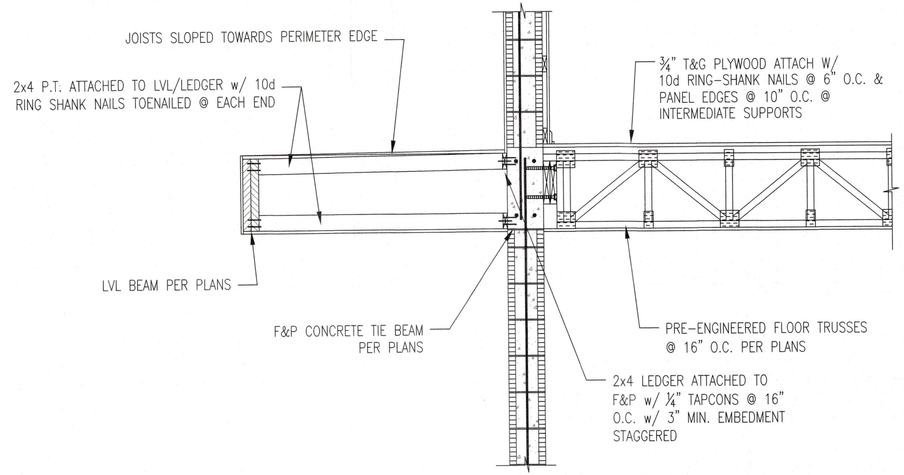

5 CONNECTION DETAIL
SCALE: 3/4"=1'-0"

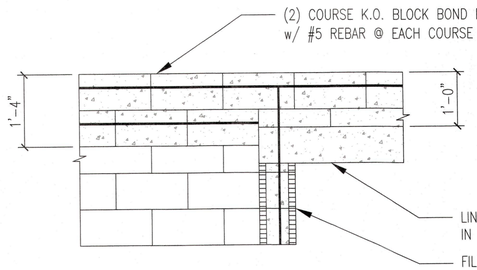

TYP. OPENING DETAIL
SCALE: 3/4"=1'-0"

RECEIVED
APR 2 - 2024
TOWN OF LONGBOAT KEY
Planning, Zoning & Building

BLDG PERMIT PLANS
FILE
Copy of Record

Structural Components Only
PEX Consulting Engineers BRD, LLC
JEFFREY L. VOGEL, PE #81235
Cert. of Auth.#33881
4315 53RD AVE E, BRADENTON FL 34203
TEL (941) 365-1900/ FAX (888)365-4041
JEFF@PEXENGINEER.COM

THIS ITEM HAS BEEN ELECTRONICALLY SIGNED AND SEALED BY (JEFFREY VOGEL, PE) USING A SHA-1 AUTHENTICATION CODE FOR STRUCTURAL COMPONENTS ONLY AND DOES NOT INCLUDE "E" SHEET(S). PRINTED COPIES OF THIS DOCUMENT ARE NOT CONSIDERED SIGNED AND SEALED AND THE SHA-1 AUTHENTICATION CODE MUST BE VERIFIED ON ANY ELECTRONIC COPY

Majher Residence:

7017 Longboat Dr. N.,
Longboat Key, FL 34228

TAG	DATE	REASON
A	11/30/2023	PER TRUSS REVIEW

REVISION

SEAL

JEFFREY L. VOGEL LICENSE No 81235 STATE OF FLORIDA PROFESSIONAL ENGINEER

Date:	01/19/2021
Drawn by:	RS
Job No.:	20-0470
Sheet:	S.7

WHILE EVERY ATTEMPT HAS BEEN MADE IN THE PREPARATION OF THESE DRAWINGS TO ASSURE ACCURACY, THE ACCOMPANY CONTRACTOR SHALL VERIFY ALL DIMENSIONS AT JOB SITE. THE CONTRACTOR/OWNER SHALL REPORT ALL DISCREPANCIES BETWEEN DRAWINGS AND EXISTING CONDITIONS TO THE ENGINEER PRIOR TO COMMENCING WORK. © 2014 PEX LLC

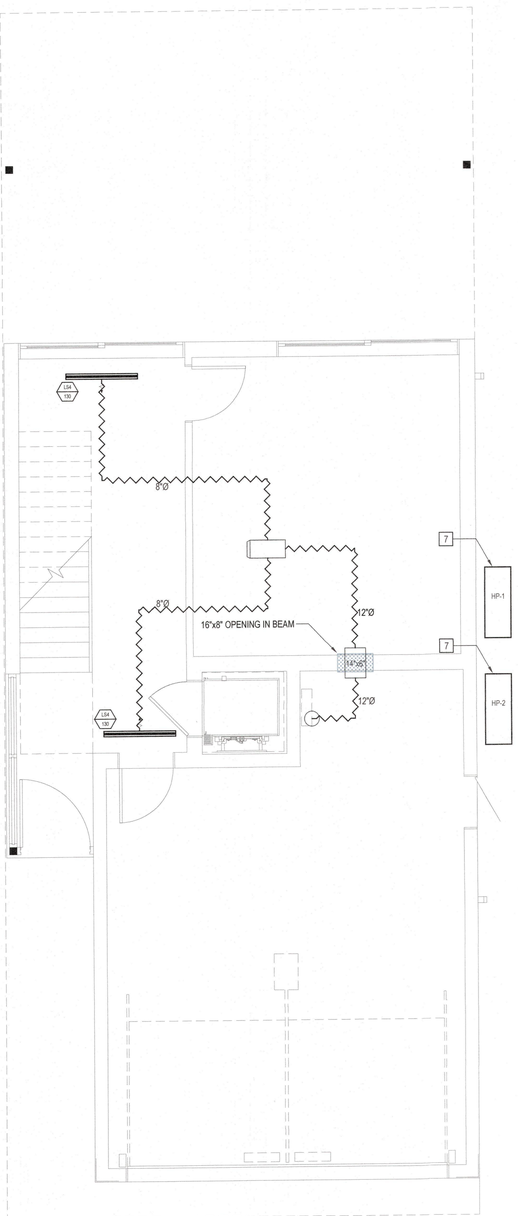

HVAC PLAN - GROUND FLOOR
1/4"=1'-0"

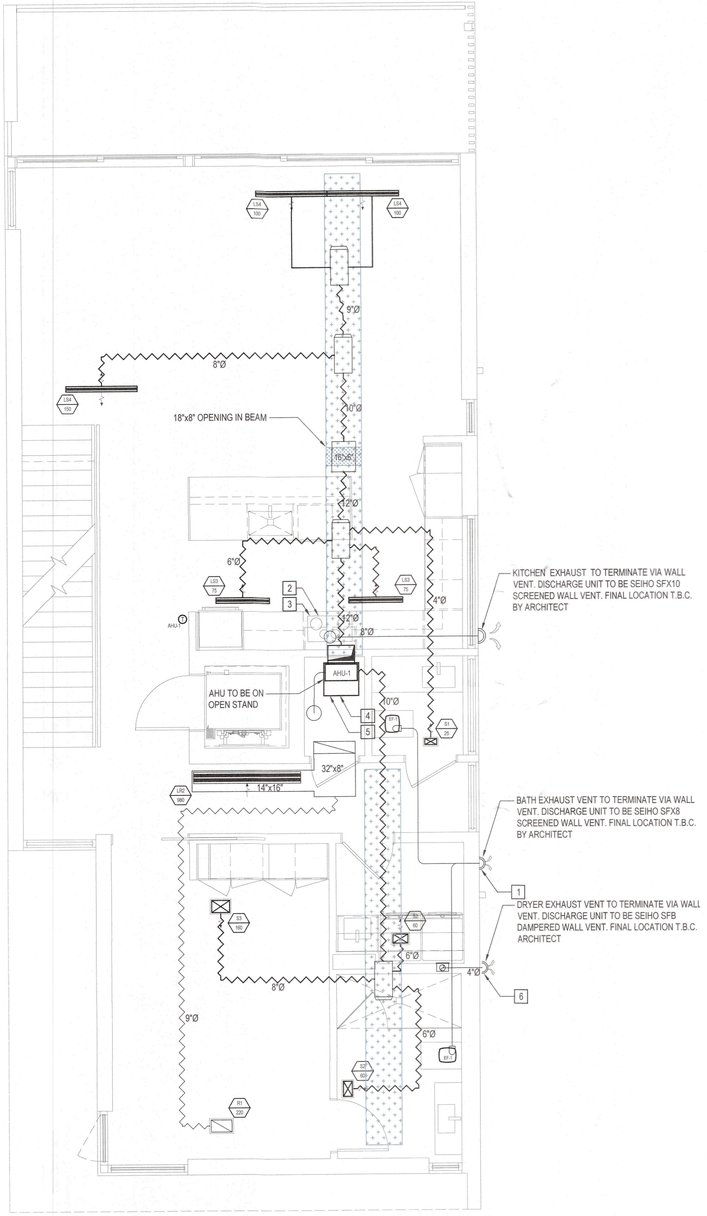

HVAC PLAN - FIRST FLOOR
1/4"=1'-0"

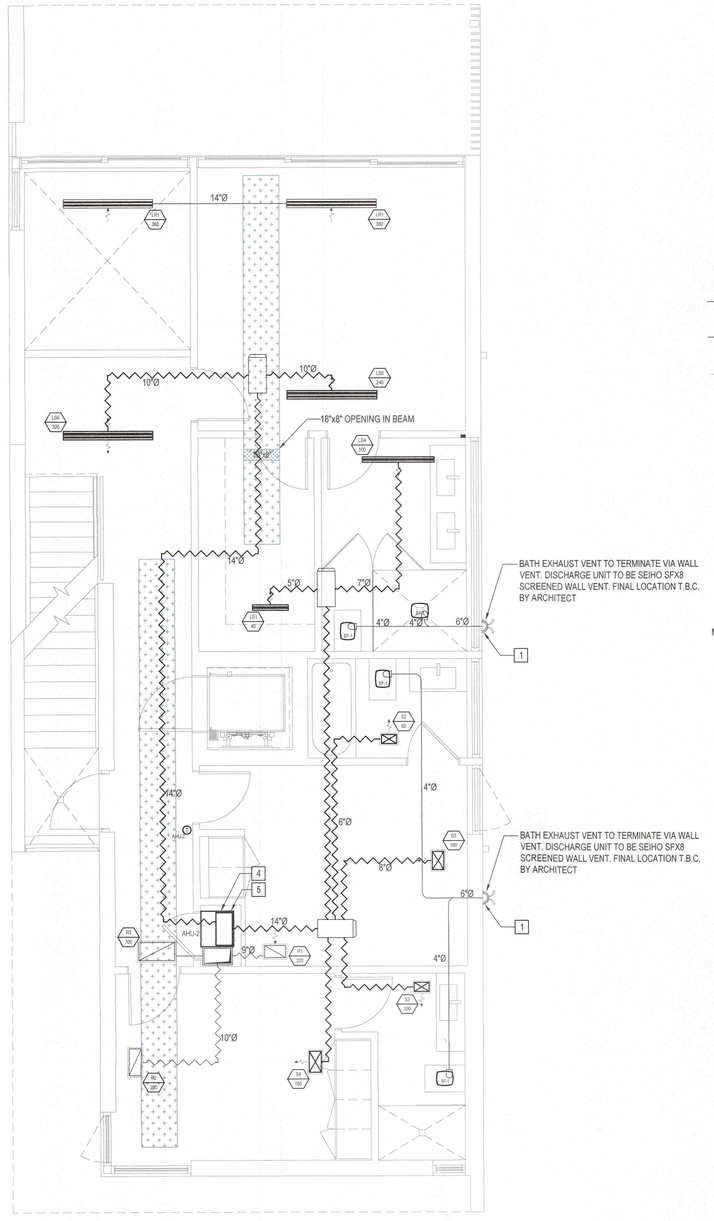

HVAC PLAN - SECOND FLOOR
1/4"=1'-0"

INDICATES REQUIRED DUCT CHASE

CEILING FRAMING AND TRUSS DESIGN TO BE FULLY CO-ORDINATED WITH HVAC LAYOUT

© ESC LLC - 2011

THIS DRAWING IS COPYRIGHT AND MUST NOT BE REPRODUCED IN PART OR WHOLE WITHOUT PRIOR WRITTEN CONSENT.

DO NOT SCALE DRAWING. CONTRACTORS MUST VERIFY ALL DIMENSIONS ON SITE BEFORE COMMENCING WORKS. ALL WORKS SHALL BE COORDINATED WITH ALL OTHER TRADES

PLANS AND SPECIFICATIONS SHALL COMPLY WITH THE APPLICABLE MINIMUM BUILDING CODES AND THE APPLICABLE MINIMUM FIRE SAFETY STANDARDS AS DETERMINED IN ACCORDANCE WITH CHAPTERS 553 AND 633, LAWS OF THE STATE OF FLORIDA.

OPERATION, INEGRITY AND LONGEVITY OF INSTALLED SYSTEMS SHALL BE THE SOLE RESPONSIBILITY OF TRADE SPECIFIC SUB-CONTRACTOR

DISCLAIMER

ESC DOES NOT ACCEPT LIABILITY FOR THE DESIGN OF THE SYSTEM UNLESS ESC ARE GIVEN THE OPPORTUNITY TO FULLY VERIFY PRE- DRYWALL THAT THE INSTALLATION MEETS THE REQUIREMENTS DETAILED ON THIS DRAWING.

LEGEND

- 4"Ø — RIGID DUCT (METAL UNLESS OTHERWISE INDICATED)
- 4"Ø — ALUMINUM FLEX DUCT
- 4"Ø — FLEXIBLE DUCT
- SUPPLY REGISTER
- RETURN REGISTER
- SUPPLY LINEAR DIFFUSER
- RETURN LINEAR DIFFUSER
- THERMOSTAT / ZONE CONTROL
- FLOW DIRECTION
- MZD — MOTORIZED ZONE DAMPER
- MOAD — MOTORIZED OUTDOOR AIR DAMPER
- MD — MANUAL DAMPER

HVAC KEY NOTES

1. EXACT LOCATION OF BATH FAN EXHAUST TERMINATION T.B.C. BETWEEN MECHANICAL CONTRACTOR, GC & ARCHITECT
2. COOKTOP TO BE VENTED IN ACCORDANCE WITH MANUFACTURERS SPECIFICATION & MECHANICAL CODE. EXACT SIZE & LOCATION OF VENT T.B.C. BETWEEN MECHANICAL CONTRACTOR, GC & ARCHITECT
3. SHOULD RANGE EXHAUST HOOD BE CAPABLE OF EXHAUSTING IN EXCESS 800CFM THE SYSTEM SHALL MEET CLAUSE 505.2 OF THE FLORIDA MECHANICAL CODE 2020
4. LOCATION OF REFRIGERATION ROUTING AND CONDENSATE DISPOSAL ROUTING T.B.C. WITH G.C.
5. SHOULD BUILDER BELIEVE HOUSE AIR TIGHTNESS WILL BE BELOW 3 ACH50 MECHANICAL VENTILATION SHALL BE PROVIDED
6. DRYER TO BE VENTED IN ACCORDANCE WITH MANUFACTURERS SPECIFICATION & MECHANICAL CODE. VENT TO BE VIA WALL VENT.
7. CONDENSERS TO BE INSTALLED ON ALUMINUM HURRICANE RATED WALL BRACKETS.

Rev.	Date	Details	Initials
#4	08.26.22	Progress Set	KAW

ESC LLC
1346 Prudville Road
Suite 203
Sarasota, Florida
34236

Tel: 941.957.1100
Web: www.floridagreenbuild.com

Energy & Sustainability Consultants

Client
Leader Design Studio

BLDG PERMIT PLANS
FILE
Copy of Record

Project
Majher Residence

Drawing Title
HVAC Layout

RECEIVED
SEP 14 2023
TOWN OF LONGBOAT KEY
Planning, Zoning & Building

Purpose
PROGRESS SET

Scale @ 24x36	Date
1/4" = 1'-0"	Aug' 2022
Drawn	Checked
PS	KAW
Drawing No.	Revision
ESC2268 - M1	#4

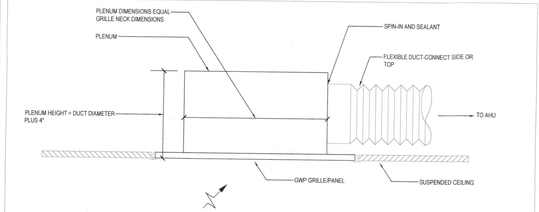

TYPICAL RETURN GRILLE PLENUM - N.T.S.

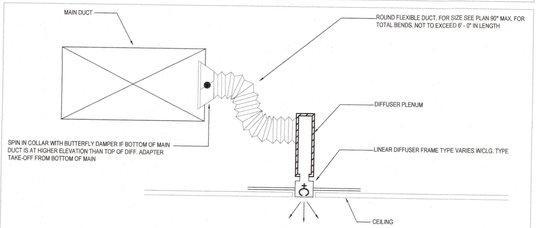

TYPICAL LOW VELOCITY LINEAR DIFFUSER - N.T.S.

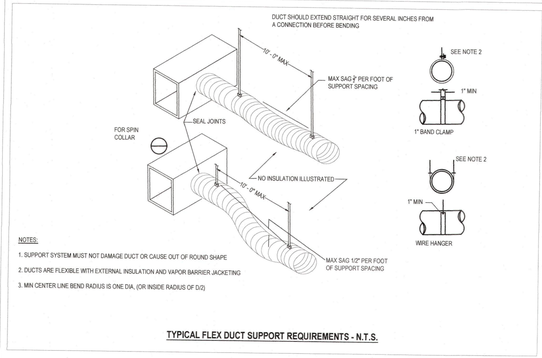

TYPICAL FLEX DUCT SUPPORT REQUIREMENTS - N.T.S.

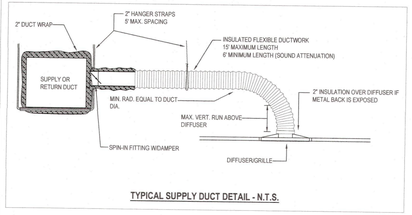

TYPICAL SUPPLY DUCT DETAIL - N.T.S.

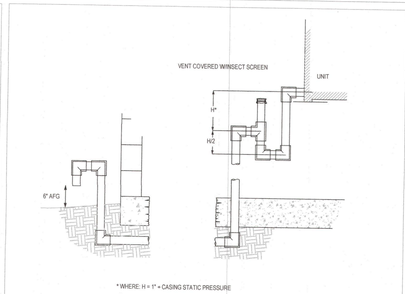

CONDENSATE PIPING UNDER SLAB - N.T.S.

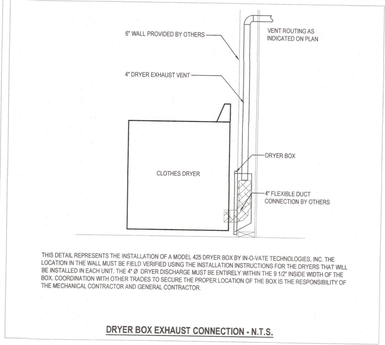

DRYER BOX EXHAUST CONNECTION - N.T.S.

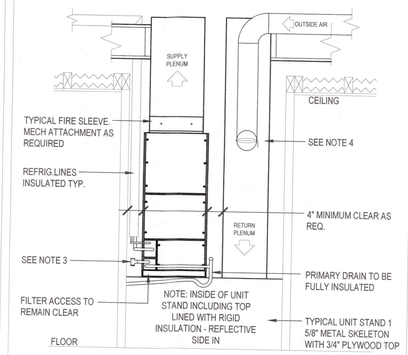

TYPICAL VERTICAL AHU DETAIL

1. DETAIL IS DIAGRAMMATIC ONLY - ACTUAL FIELD APPLICATIONS WILL VARY - ALL SIZES VARY DUE TO UNIT SIZE AND HEIGHT OF STAND - CONTACT ON SITE SUPERVISOR FOR CLARIFICATION
2. INSTALLATION IS TO CONFORM TO ALL APPLICABLE BUILDING CODE GUIDELINES AT ALL TIMES. SUB CONTRACTOR TO FIELD VERIFY CLOSET/STAND DIMENSIONS PRIOR TO DRYWALL INSTALLATION
3. SECONDARY DRAIN LINE TO BE PROVIDED WITH WATER DETECTION DEVICE WIRED FOR UNIT SHUTDOWN WHEN CONDENSATE IS PRESENT IN LINE
4. WHEN PRESENT ON PLAN, OUTSIDE AIR TO RETURN PLENUM TO BE CONTROLLED BY DAMPER APPARATUS ACCESSIBLE FROM INTERIOR OF MECHANICAL UNIT CLOSET

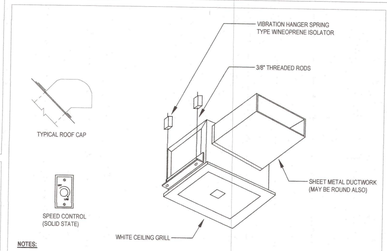

EXHAUST FAN DETAIL - N.T.S.

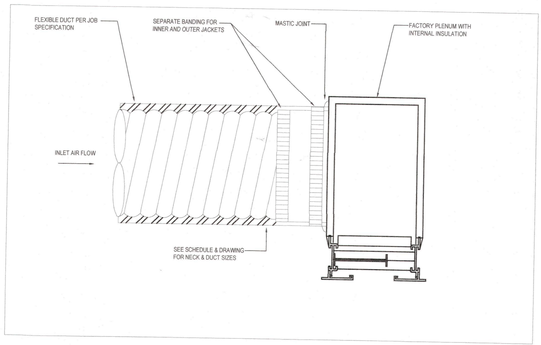

STANDARD HVAC NOTES

1. ALL WORK TO BE DONE IN ACCORDANCE WITH THESE PLANS, STATE, LOCAL, & NATIONAL CODES.
2. THESE DRAWINGS ARE SCHEMATIC IN NATURE AND ARE NOT INTENDED TO SHOW EVERY DETAIL. THE HVAC CONTRACTOR SHALL FURNISH AND INSTALL ALL ITEMS REQUIRED FOR A COMPLETE WORKING INSTALLATION.
3. THE DUCT DESIGN AS SHOWN TAKES INTO ACCOUNT THE STATIC PRESSURES AND SYSTEM LOSSES FROM THE EQUIPMENT AND ACCESSORIES SHOWN AS SCHEDULED. **VARIATIONS FROM THIS EQUIPMENT, DUCTWORK OR ROUTING LOCATIONS SHALL BE SUBMITTED AND APPROVED PRIOR TO INSTALLATION.**
4. ALL WORK SHALL BE PERFORMED BY A LICENSED CONTRACTOR AS REGISTERED OR CERTIFIED IN THE STATE OF FLORIDA.
5. WHEN APPLICABLE -THE CONTRACTOR SHALL VISIT THE JOB SITE AND FAMILIARIZE HIMSELF WITH ALL EXISTING CONDITIONS.
6. ALL WORK SHALL BE COORDINATED WITH OTHER TRADES TO AVOID INTERFERENCE WITH THE PROGRESS OF CONSTRUCTION.
7. DUCTWORK IS TO BE CONSTRUCTED AND INSTALLED IN ACCORDANCE WITH MANUFACTURERS RECOMMENDATIONS, SMACNA MANUALS AND THE FOLLOWING SCHEDULE:

   RIGID RECTANGULAR DUCT - GALVANIZED SHEET METAL DUCT SECTIONS, USE SMACNA APPROVED CONNECTION APPROACH. EXTERNALLY INSULATED WITH R6 FOIL BACKED INSULATION AND VAPOR BARRIER. ALL RECTANGULAR DUCT ELBOWS SHALL BE MADE "SOFT" BY UTILIZING ANGLES LESS THAN 90 DEGREES. UTILIZE TURNING VANES AT ALL 90 DEGREE ELBOWS AND T-SECTIONS.

   FIBREBOARD RECTANGULAR DUCT - FIBERGLASS DUCT BOARD, MINIMUM R4.2 INSULATION. ANY RECTANGULAR DUCT ELBOWS SHALL BE MADE "SOFT" BY UTILIZING ANGLES LESS THAN 90 DEGREES OR UTILIZE TURNING VANES AT ALL 90 DEGREE ELBOWS AND T-SECTIONS. BLACKBOARD WHERE VISIBLE.

   RIGID ROUND DUCT - GALVANIZED SHEET METAL, WRAPPED WITH R6 FOIL BACKED EXTERNAL INSULATION AND VAPOR BARRIER.

   FLEXIBLE DUCTS - FLEXIBLE WIRE REINFORCED DUCT WITH R6 FOIL BACKED EXTERNAL INSULATION AND VAPOR BARRIER.

   EXHAUST DUCT - GALVANIZED SHEET METAL, UNINSULATED.

8. AIR DISTRIBUTION DEVICES TO BE AS SCHEDULED, REFER TO PLANS FOR AIR PATTERN DIRECTIONS AND PROVIDE PATTERN CONTROLLERS AS REQUIRED.
9. ALL DUCT SIZES INDICATE INSIDE "FREE AREA" DIMENSIONS.
10. THERMOSTATS SHALL BE PRGRAMMABLE TYPE, C/W INTEGRATED HUMIDISTAT OR APPROVED EQUAL & MOUNTED 54" ABOVE FINISHED FLOOR.
11. THE HVAC CONTRACTOR SHALL COMPLY FULLY WITH THE REQUIREMENTS OF ANSI/ACCA STANDARD 5 'HVAC QUALITY INSTALLATION SPECIFICATION' WITH PARTICULAR REFERENCE TO SECTIONS 4 THRU 6.
12. THE HVAC CONTRACTOR SHALL GUARANTEE ALL MATERIALS AND WORKMANSHIP FREE FROM DEFECTS FOR A PERIOD OF NOT LESS THAN 1 YEAR FROM THE DATE OF ACCEPTANCE, UNLESS OTHERWISE NOTED.
13. ALL EQUIPMENT, THERMOSTATS, SENSORS AND CONTROL PANELS SHALL BE CLEARLY AND PERMANENTLY MARKED WITH THE SYSTEM NUMBER IT SERVES. EQUIPMENT TAGS SHALL BE ENGRAVED OR EMBOSSED AND SECURED BY RIVETS OR SCREWS NEAR THE MANUFACTURES NAME PLATE
14. THE ENTIRE DUCT SYSTEM TO BE FABRICATED AND INSTALLED IN ANTICIPATION OF PERFORMANCE TESTING. ALL REGISTER BOXES AND PLENUMS SHALL BE SEALED AS PART OF THE ROUGH-IN PROCESS. ENTIRE DUCT SYSTEM TO BE PRESSURE TESTED TO 25pa. TO ENSURE TOTAL LEAKAGE IS LESS THAN OR EQUAL TO 6 CFM PER 100 SQ.FT AND LEAKAGE TO OUTDOORS IS LESS THAN OR EQUAL TO 4 CFM PER 100 SQ.FT
15. THE HVAC CONTRACTOR SHALL SEAL ALL OPEN DUCTS, REGISTERS, VENTS AND EQUIPMENT IN ORDER TO MINIMIZE CONTAMINATION DURING CONSTRUCTION.
16. THE FINAL LOCATION FOR ALL CEILING ELEMENTS IS TO BE CO-ORDINATED ON SITE PRIOR TO INSTALLATION.
17. THE HVAC CONTRACTOR SHALL PROVIDE OWNER DOCUMENTION AND INSTRUCTION IN ACCORDANCE WITH ANSI/ACCA STANDARD 5 'HVAC QUALITY INSTALLATION SPECIFICATION' SECTION 6.

© ESC LLC - 2011

THIS DRAWING IS COPYRIGHT AND MUST NOT BE REPRODUCED IN PART OR WHOLE WITHOUT PRIOR WRITTEN CONSENT

DO NOT SCALE DRAWING. CONTRACTORS MUST VERIFY ALL DIMENSIONS ON SITE BEFORE COMMENCING WORKS. ALL WORKS SHALL BE COORDINATED WITH ALL OTHER TRADES

PLANS AND SPECIFICATIONS SHALL COMPLY WITH THE APPLICABLE MINIMUM BUILDING CODES AND THE APPLICABLE MINIMUM FIRE SAFETY STANDARDS AS DETERMINED IN ACCORDANCE WITH CHAPTERS 553 AND 633, LAWS OF THE STATE OF FLORIDA.

OPERATION, INEGRITY AND LONGEVITY OF INSTALLED SYSTEMS SHALL BE THE SOLE RESPONSIBILITY OF TRADE SPECIFIC SUB-CONTRACTOR

DISCLAIMER

ESC DOES NOT ACCEPT LIABILITY FOR THE DESIGN OF THE SYSTEM UNLESS ESC ARE GIVEN THE OPPORTUNITY TO FULLY VERIFY PRE- DRYWALL THAT THE INSTALLATION MEETS THE REQUIREMENTS DETAILED ON THIS DRAWING.

VENTILATION SCHEDULE	
TAG	EF-1
MANUFACTURER	PANASONIC
MODEL	FV-05-11VKS1
ELECTRICAL DATA (V-PH-HZ)	120 / 1 / 60
CFM	50 - 110 CFM
STATIC PRESSURE	0.5
NOTES	1, 2

NOTES

1. TO BE C/W INTEGRAL BACKDRAFT DAMPER
2. LOUVER, WALL OR ROOF CAP W/PEST SCREEN

HEAT PUMP SPLIT SYSTEM EQUIPMENT SCHEDULE		
SYSTEM TAG - NUMBER	HP - 1 / AHU - 1	HP - 2 / AHU - 2
MANUFACTURER	TRANE	TRANE
NOMINAL SIZE	3.0 TON	3.0 TON
SYSTEM ARI RATING	19.0 SEER / 11.0 HSPF	19.0 SEER / 11.0 HSPF
TOTAL COOLING CAPACITY	32,800 BTUH	32,800 BTUH
SENSIBLE COOLING CAPACITY	25,900 BTUH	25,900 BTUH
HEATING CAPACITY	34,400 BTUH	34,400 BTUH
TOTAL AIR FLOW CFM / ESP	1200 / 0.5"	1200 / 0.5"
OUTSIDE AIR CFM	-	-
CONDENSING UNIT MOD. #	4TWL9036	4TWL9036
ELECTRICAL DATA (V / PH / HZ)	208 / 230 / 1 / 60	208 / 230 / 1 / 60
COMPRESSOR RLA	12.4	12.4
COMPRESSOR LRA	48.9	48.9
COMPRESSOR MCA	26.9	26.9
COMPRESSOR MOP	30	30
FAN FLA	2.3	2.3
WEIGHT	226	226
AIR HANDLER MOD. #	TAM9A0C36	TAM9A0C36
ELECTRICAL DATA (V / PH / HZ)	200 - 230 / 1 / 60	200 - 230 / 1 / 60
KW INPUT	5.0	5.0
FAN HP / kW	1/2 HP	1/2 HP
FAN MOTOR SPEED	VARIABLE	VARIABLE
FAN FLA	3.5	3.5
AIR HANDLER MCA	29.0	29.0
AIR HANDLER MOP	30	30
WEIGHT	146	146

EQUIPMENT NOTES

1. COOLING CAPACITIES BASED ON 75°F DB, 63°F WB AIR ENTERING INDOOR COIL, 95°F AIR ENTERING OUTDOOR COIL
2. PROVIDE CONDENSATE DRAIN TRAPS COMPLETE WITH FLOAT SWITCH. FLOAT SWITCHES SHALL SHUT DOWN UNIT WHEN TRIGGERED
3. EQUIPMENT SHALL NOT BE USED DURING CONSTRUCTION. TEMPORARY UNITS SHALL BE USED SHOULD COOLING BE REQUIRED DURING CONSTRUCTION
4. ALL EQUIPMENT SHALL BE PROTECTED DURING CONSTRUCTION
5. ON CERTIFICATE OF OCCUPATION ALL FILTERS SHALL BE REPLACED
6. AIR HANDLERS TO BE PROVIDED WITH SECONDARY DRAIN PANS

PROJECT EQUIPMENT NOTES

1. TRANE XL1050 CONTROLLERS TO BE PROVIDED & LOCATION OF CONTROLLERS SHALL BE COORDINATED WITH ARCHITECT.
2. 12 YEAR WARRANTY TO BE PROVIDED ON ALL EQUIPMENT

DIFFUSER, REGISTER , GRILLE SCHEDULE							
TAG	SIZE/SLOT	NECK	SLOTS	MANUFACTURER	MODEL	COLOR	COMMENTS
LS1	24" x 1.0"	SEE PLAN	1	PRICE	AS210	WHITE	TYPE 21 EXPOSED FRAME
LS2	24" x 1.0"	SEE PLAN	2	PRICE	AS210	WHITE	TYPE 21 EXPOSED FRAME
LS3	36" x 1.0"	SEE PLAN	1	PRICE	AS210	WHITE	TYPE 21 EXPOSED FRAME
LS4	48" x 1.0"	SEE PLAN	1	PRICE	AS210	WHITE	TYPE 21 EXPOSED FRAME
LS5	60" x 1.0"	SEE PLAN	1	PRICE	AS210	WHITE	TYPE 21 EXPOSED FRAME
LS6	60" x 1.0"	SEE PLAN	2	PRICE	AS210	WHITE	TYPE 21 EXPOSED FRAME
S1	8" x 4"	SEE PLAN	SEE PLAN	HART & COOLEY	A61-MS	WHITE	
S2	10" x 6"	SEE PLAN	SEE PLAN	HART & COOLEY	A61-MS	WHITE	
S3	12" x 8"	SEE PLAN	SEE PLAN	HART & COOLEY	A61-MS	WHITE	
S4	14" x 8"	SEE PLAN	SEE PLAN	HART & COOLEY	A61-MS	WHITE	
LR1	60" x 1.0"	SEE PLAN	2	PRICE	AS210	WHITE	TYPE 21 EXPOSED FRAME
LR2	72" x 2.0"	SEE PLAN	2	PRICE	AS220	WHITE	TYPE 21 EXPOSED FRAME
R1	14" x 8"	SEE PLAN	N/A	HART & COOLEY	RH45	WHITE	
R2	18" x 8"	SEE PLAN	N/A	HART & COOLEY	RH45	WHITE	
R3	24" x 18"	SEE PLAN	N/A	HART & COOLEY	RH45	WHITE	

NOTES

1. ALL EQUIPMENT SHALL BE INSTALLED IN ACCORDANCE WITH MANUFACTURERS RECOMMENDATIONS
2. ALL LINEAR DIFFUSERS ARE TO BE COMPLETE WITH ENGINEERED INSULATED PLENUM OF THE SAME MANUFACTURE UNLESS OTHERWISE DETAILED
3. IT MAY BE NECESSARY TO CUSTOM FABRICATE SOME OF THE PLENUM BOXES TO SUIT SITE CONDITIONS.
4. ALL PLENUMS TO BE COMPLETE WITH INTERNAL BUTTERFLY DAMPERS ACCESSED FROM LINEAR TO BALANCE AIRFLOW
5. LINEAR SLOT END CONDITIONS TO BE AS REQUIRED TO MEET PLANS
3. SAMPLES OF EACH TYPE MUST BE PROVIDED PRIOR TO ORDERING

STANDARD MEP COORDINATION APPROACH

1. THE MECHANICAL DESIGN AND EQUIPMENT SELECTION HAS BEEN COORDINATED WITH PLUMBING AND ELECTRICAL REQUIREMENTS AND WITH ARCHITECTURAL DRAWINGS THAT WERE AVAILABLE AT THE TIME OF DESIGN. THE MECHANICAL CONTRACTOR SHALL NOTIFY THE GC/CM OF FIELD CONDITIONS THAT MAY REQUIRE ALTERNATE DUCT SIZES OR ROUTING PRIOR TO MAKING SUCH CHANGES
2. IT SHALL BE THE SOLE RESPONSIBILITY OF THE GENERAL CONTRACTOR/CONSTRUCTION MANAGER TO SUPERVISE THE COORDINATION ALL COMPONENTS OF THE BUILDING DESIGN, INCLUDING BUT NOT LIMITED TO THE ROOF TRUSSES, STRUCTURAL MEMBERS AND ARCHITECTURAL FEATURES, TO ENSURE FULL AND COMPLETE COMPLIANCE WITH THE DESIGN DOCUMENTS. THIS WILL REQUIRE THE REVIEW OF SHOP DRAWINGS BEFORE MANUFACTURING OF THESE COMPONENTS. ANY FAILURE TO COORDINATE THE WORK IS SOLELY THE RESPONSIBILITY OF THE GC/CM

GENERAL

MECHANICAL SCHEDULES, DETAILS & NOTES

N.T.S.

#4	08.26.22	Permit Set	KHW
Rev.	Date	Details	Initials

ESC LLC
1346 Fruitville Road
Suite 203
Sarasota, Florida
34236

Tel: 941.957.1100
Web: www.floridagreenbuild.com

esc
Energy & Sustainability Consultants

Client
Leader Design Studio

Project
Majher Residence

RECEIVED
SEP 14 2023
TOWN OF LONGBOAT KEY
Planning, Zoning & Building

BLDG PERMIT PLANS
FILE
Copy of Record

Drawing Title
Mechanical Schedules, Details & Notes

Purpose
PERMIT SET

Scale @ 24x36 1/4"= 1'-0"	Date Aug' 2022
Drawn PS	Checked KAW
Drawing No. ESC2268 - M2	Revision #4

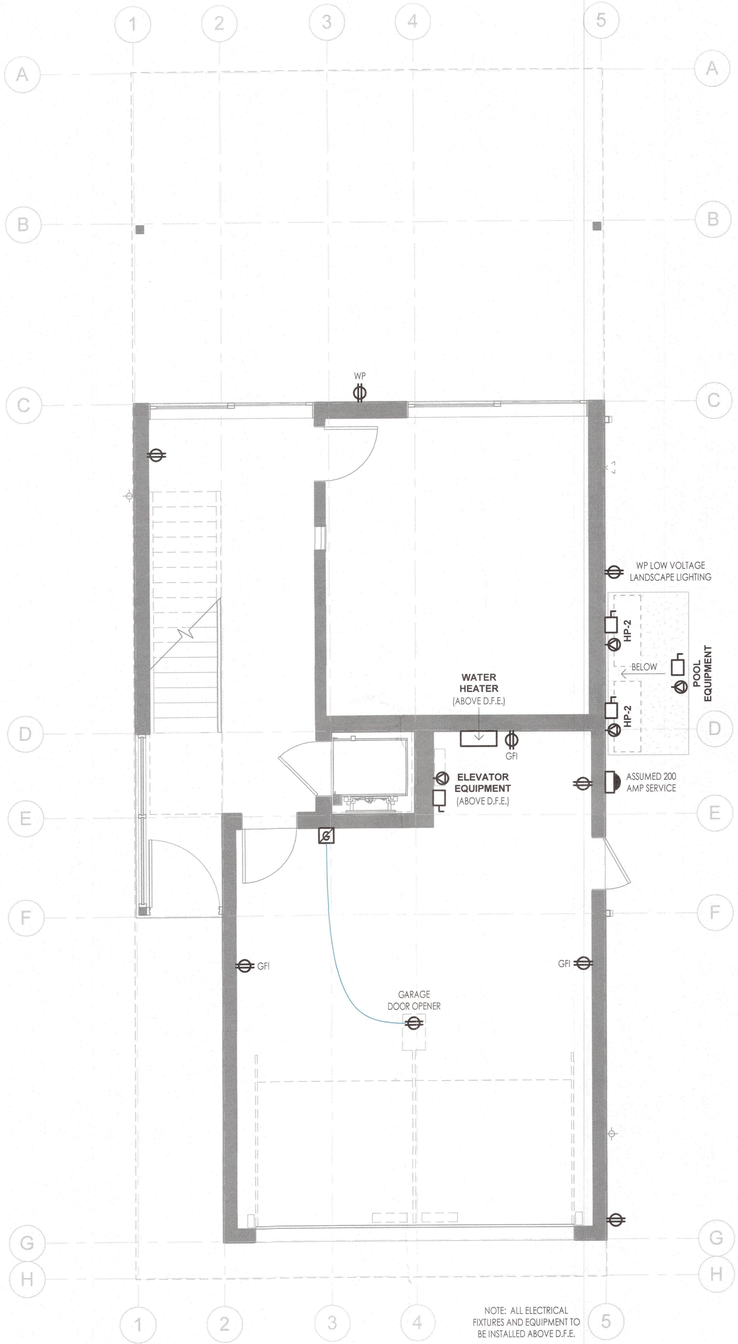

1 POWER PLAN - GROUND FLOOR
E1.0 1/4" = 1'-0"

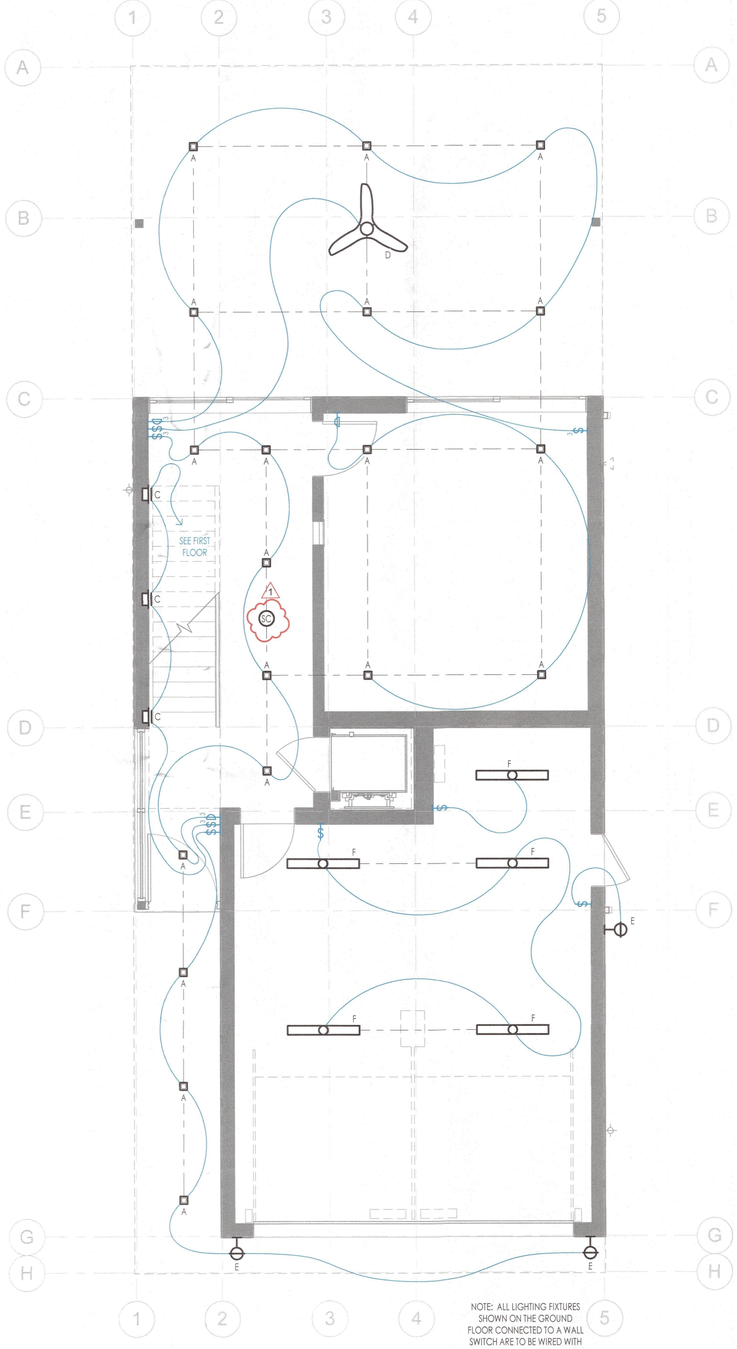

2 LIGHTING PLAN - GROUND FLOOR
E1.0 1/4" = 1'-0"

LIGHTING LEGEND

	RECESSED LIGHT FIXTURE
	RECESSED LIGHT FIXTURE (REPLACE EXISTING)
	RECESSED ADJUSTABLE LIGHT FIXTURE
	SURFACE MOUNTED PUCK LIGHT
	PENDANT FIXTURE
	GARAGE DOOR OPENER, CEILING MOUNTED
	4' 2-TUBE SURFACE MOUNT FLUORESCENT LIGHT FIXTURE
	2-HEAD SECURITY LIGHT W/ MOTION SENSOR
	STRIP LIGHT
	EXHAUST FAN
	RECESSED MULTI LAMP FIXTURE
	WALL MOUNTED LIGHT FIXTURE
	WALL MOUNTED LIGHT FIXTURE (REPLACE EXISTING)
	TUBE FLUORESCENT STRIP LIGHT FIXTURE
	EXTERIOR FLOOR-MOUNT PHOTOVOLTAIC LIGHT FIXTURE

RECEPTACLE LEGEND

	HALF SWITCHED DUPLEX RECEPTACLE
	HALF SWITCHED FLOOR DUPLEX RECEPTACLE
	QUADPLEX RECEPTACLE - AFI (ARC FAULT INTERRUPTION)
	DUPLEX RECEPTACLE - AFI (ARC FAULT INTERRUPTION)
	LOW-PROFILE EXT. RECEPTACLE POST
J	RECESSED CEILING MOUNTED J-BOX
	RECEPTACLE PER EQUIPMENT MANUFACTURER'S REQ.
	220V RECEPTACLE, FIELD VERIFY MOUNTING HEIGHT

SWITCHING LEGEND

$	SINGLE-POLE SWITCH MOUNT AT 40" A.F.F. U.N.O.
$3	THREE-WAY SWITCH MOUNT AT 40" A.F.F. U.N.O.
	SINGLE-POLE DIMMER SWITCH MOUNT AT 40" A.F.F. U.N.O.
3	THREE-WAY DIMMER MOUNT AT 40" A.F.F. U.N.O.
	FAN SWITCH
WB	WATER BUG

MISCELLANEOUS

	TELEPHONE / DATA RECEPTACLE MOUNT HORIZ. AT BASE
TV	TELEVISION / CABLE OUTLET
T H	THERMOSTAT AT 60" A.F.F. (FIELD LOCATE) & HUMIDISTAT
	MULTI-OUTLET RACEWAY (PLUG MOLD) AT 12" O.C.
	GARAGE DOOR OPENER, CEILING MOUNTED.
	ELECTRICAL METER
	MAIN ELECTRICAL PANEL & DISTRIBUTION BOARD
	DISCONNECT (SAFETY SWITCH) SIZED PER EQUIPMENT
	CEILING FAN (PROVIDE RHEOSTAT AS RECOMMENDED)
ICP	IRRIGATION CONTROL PANEL
SD	SMOKE DETECTOR
SC	SMOKE/CARBON MONOXIDE DETECTOR
	PREWIRE SHADE- POWERED ON RIGHT SIDE OF SHADE
	DRAPE
	GARAGE DOOR OPENER, CONTROL SWITCH
	PUMP MOTOR (IN-LINE RECIRCULATING PUMP)
K P D	KEYPAD
DC	DOORBELL CHIME
	GARBAGE DISPOSAL W/ AIR SWITCH
WT	WINDOW TREATMENT SWITCH
WP	WATERPROOF
GFI	GROUND FAULT INTERRUPTED
DD	DEDICATED OUTLET

ELECTRICAL NOTES

1. ALL LIGHTING FIXTURES SHOWN ON THE GROUND FLOOR CONNECTED TO A WALL SWITCH ARE TO BE WIRED WITH LOW-VOLTAGE, AS REQ.
2. COORDINATE HEIGHTS AND LOCATIONS OF ALL FIXTURES AND OUTLETS WITH I.D. DRAWINGS.
3. ALL NEW WORK SHALL CONFORM TO FBC 2020 - ENERGY CONSERVATION CODE, AS REQ.
4. ALL NEW WORK SHALL CONFORM TO THE CURRENT NEC CODE.

leader DESIGNSTUDIO
Leader Design Studio, LLC
FL-AR98232

1003 North Orange Ave., Suite A2
Sarasota, Florida 34326
O: (941) 404-8055

GENERAL CONTRACTOR
The Vision Group, LLC
1900 Main Street Suite 205
Sarasota, Florida 34228
O: (941) 357-4040

STRUCTURAL ENGINEER
Apex Consulting Engineers
4315 53rd Avenue East
Bradenton, Florida 34203
O: (941) 365-1900

ENERGY & SUSTAINABILITY CONSULTANTS
ESC, LLC
1348 Fruitville Road
Sarasota, Florida 34236
O: (941) 957-1100

INTERIOR DESIGNER
SAWA Design Studio
1003 North Orange Ave., Suite A2
Sarasota, Florida 34236
O: (941) 564-9291

MAJHER RESIDENCE

7017 Longboat Drive North
Longboat Key, 34228

Project number	LDS-2203
Date	04.27.2023
Drawn by	DM
Checked by	CL
Phase	PERMIT SET

SEAL

STATE OF FLORIDA · CHRISTOPHER N. LEADER · AR98232 · REGISTERED ARCHITECT

"To the best of the Architect's or Engineer's knowledge, the plans and specifications comply with the applicable minimum building codes and applicable fire safety standards as determined by local authority in accordance with Chapter 553 and 663 of Florida Statutes."

Christopher Leader
AR 98232

REVISION

No.	Description	Date
1	BLDG. DEPT. COMMENTS	08/16/23

BLDG PERMIT PLANS
FILE
Copy of Record

SHEET

LIGHTING & POWER PLANS

RECEIVED
SEP 14 2023
TOWN OF LONGBOAT KEY
Planning, Zoning & Building

E1.0

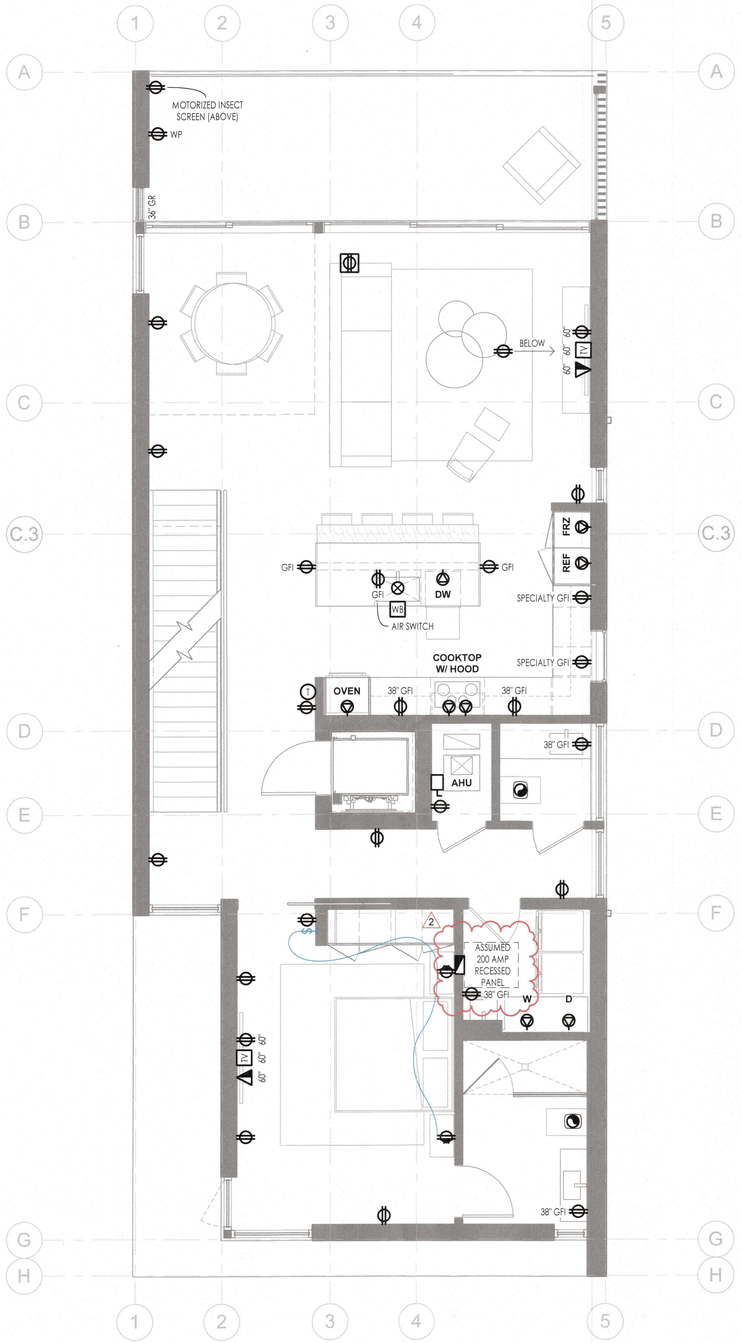

1 E1.1 POWER PLAN - FIRST FLOOR
1/4" = 1'-0"

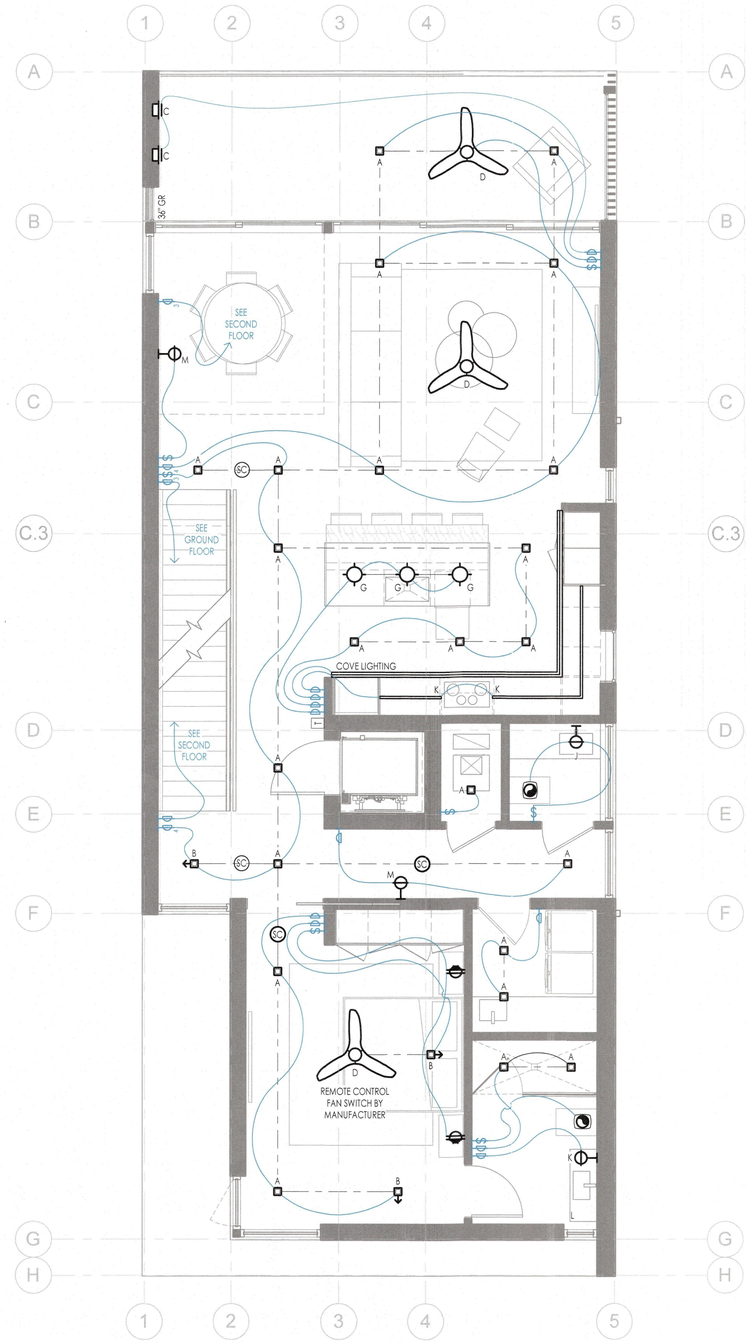

2 E1.1 LIGHTING PLAN - FIRST FLOOR
1/4" = 1'-0"

LIGHTING LEGEND

	RECESSED LIGHT FIXTURE
	RECESSED LIGHT FIXTURE (REPLACE EXISTING)
	RECESSED ADJUSTABLE LIGHT FIXTURE
	SURFACE MOUNTED PUCK LIGHT
P	PENDANT FIXTURE
	GARAGE DOOR OPENER, CEILING MOUNTED
	4' 2-TUBE SURFACE MOUNT FLUORESCENT LIGHT FIXTURE
	2-HEAD SECURITY LIGHT W/ MOTION SENSOR
	STRIP LIGHT
	EXHAUST FAN
	RECESSED MULTI LAMP FIXTURE
	WALL MOUNTED LIGHT FIXTURE
	WALL MOUNTED LIGHT FIXTURE (REPLACE EXISTING)
	TUBE FLUORESCENT STRIP LIGHT FIXTURE
	EXTERIOR FLOOR-MOUNT PHOTOVOLTAIC LIGHT FIXTURE

RECEPTACLE LEGEND

	HALF SWITCHED DUPLEX RECEPTACLE
	HALF SWITCHED FLOOR DUPLEX RECEPTACLE
	QUADPLEX RECEPTACLE - AFI (ARC FAULT INTERRUPTION)
	DUPLEX RECEPTACLE - AFI (ARC FAULT INTERRUPTION)
	LOW-PROFILE EXT. RECEPTACLE POST
J	RECESSED CEILING MOUNTED J-BOX
	RECEPTACLE PER EQUIPMENT MANUFACTURER'S REQ.
	220V RECEPTACLE, FIELD VERIFY MOUNTING HEIGHT

SWITCHING LEGEND

$	SINGLE-POLE SWITCH MOUNT AT 40" A.F.F. U.N.O.
$3	THREE-WAY SWITCH MOUNT AT 40" A.F.F. U.N.O.
	SINGLE-POLE DIMMER SWITCH MOUNT AT 40" A.F.F. U.N.O.
3	THREE-WAY DIMMER MOUNT AT 40" A.F.F. U.N.O.
F	FAN SWITCH
WB	WATER BUG

MISCELLANEOUS

	TELEPHONE / DATA RECEPTACLE MOUNT HORIZ. AT BASE
TV	TELEVISION / CABLE OUTLET
T H	THERMOSTAT AT 60" A.F.F. (FIELD LOCATE) & HUMIDISTAT
	MULTI-OUTLET RACEWAY (PLUG MOLD) AT 12" O.C.
	GARAGE DOOR OPENER, CEILING MOUNTED.
	ELECTRICAL METER
	MAIN ELECTRICAL PANEL & DISTRIBUTION BOARD
	DISCONNECT (SAFETY SWITCH) SIZED PER EQUIPMENT
	CEILING FAN (PROVIDE RHEOSTAT AS RECOMMENDED)
ICP	IRRIGATION CONTROL PANEL
SD	SMOKE DETECTOR
SC	SMOKE/CARBON MONOXIDE DETECTOR
	PREWIRE SHADE- POWERED ON RIGHT SIDE OF SHADE
	DRAPE
	GARAGE DOOR OPENER, CONTROL SWITCH
	PUMP MOTOR (IN-LINE RECIRCULATING PUMP)
K P	KEYPAD
DC	DOORBELL CHIME
	GARBAGE DISPOSAL W/ AIR SWITCH
WT	WINDOW TREATMENT SWITCH
WP	WATERPROOF
GFI	GROUND FAULT INTERRUPTED
DD	DEDICATED OUTLET

ELECTRICAL NOTES

1. ALL LIGHTING FIXTURES SHOWN ON THE GROUND FLOOR CONNECTED TO A WALL SWITCH ARE TO BE WIRED WITH LOW-VOLTAGE, AS REQ.
2. COORDINATE HEIGHTS AND LOCATIONS OF ALL FIXTURES AND OUTLETS WITH I.D. DRAWINGS.
3. ALL NEW WORK SHALL CONFORM TO FBC 2020 - ENERGY CONSERVATION CODE, AS REQ.
4. ALL NEW WORK SHALL CONFORM TO THE CURRENT NEC CODE.

RECEIVED
APR 2 - 2024
TOWN OF LONGBOAT KEY
Planning, Zoning & Building

leader DESIGNSTUDIO
Leader Design Studio, LLC
FL-AR98232

1003 North Orange Ave., Suite A2
Sarasota, Florida 34326
O: (941) 404-8055

GENERAL CONTRACTOR
The Vision Group, LLC
1900 Main Street Suite 205
Sarasota, Florida 34228
O: (941) 357-4040

STRUCTURAL ENGINEER
Apex Consulting Engineers
4315 53rd Avenue East
Bradenton, Florida 34203
O: (941) 365-1900

ENERGY & SUSTAINABILITY CONSULTANTS
ESC, LLC
1348 Fruitville Road
Sarasota, Florida 34236
O: (941) 957-1100

INTERIOR DESIGNER
SAWA Design Studio
1003 North Orange Ave., Suite A2
Sarasota, Florida 34236
O: (941) 564-9291

MAJHER RESIDENCE

7017 Longboat Drive North
Longboat Key, 34228

Project number	LDS-2203
Date	04.27.2023
Drawn by	DM
Checked by	CL
Phase	PERMIT SET

SEAL



"To the best of the Architect's or Engineer's knowledge, the plans and specifications comply with the applicable minimum building codes and applicable fire safety standards as determined by local authority in accordance with Chapter 553 and 663 of Florida Statutes."

Christopher Leader
AR 98232

REVISION

No.	Description	Date
1	BLDG. DEPT. COMMENTS	08/16/23
2	PEDESTAL SYSTEM	02/13/24

SHEET

LIGHTING & POWER PLANS

BLDG PERMIT PLANS
FILE
Copy of Record

E1.1

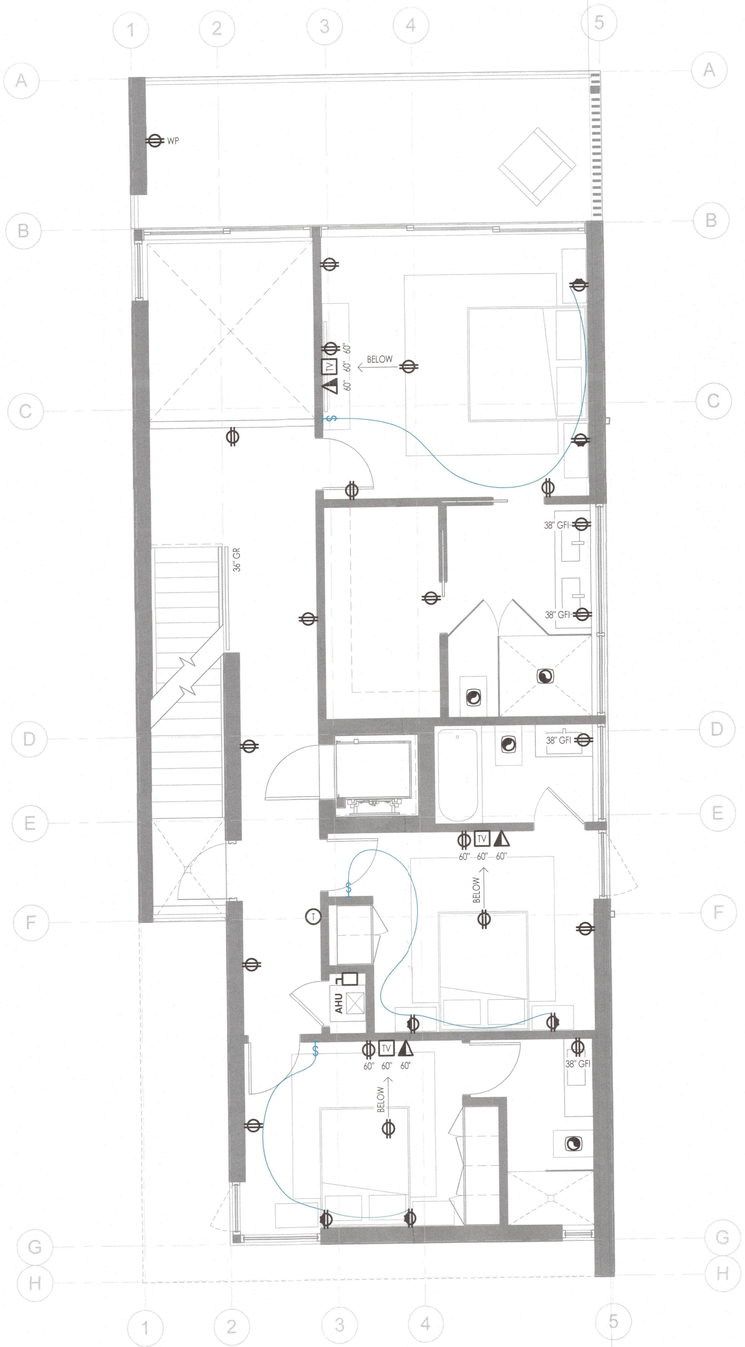

1 E1.2 POWER PLAN - SECOND FLOOR
1/4" = 1'-0"

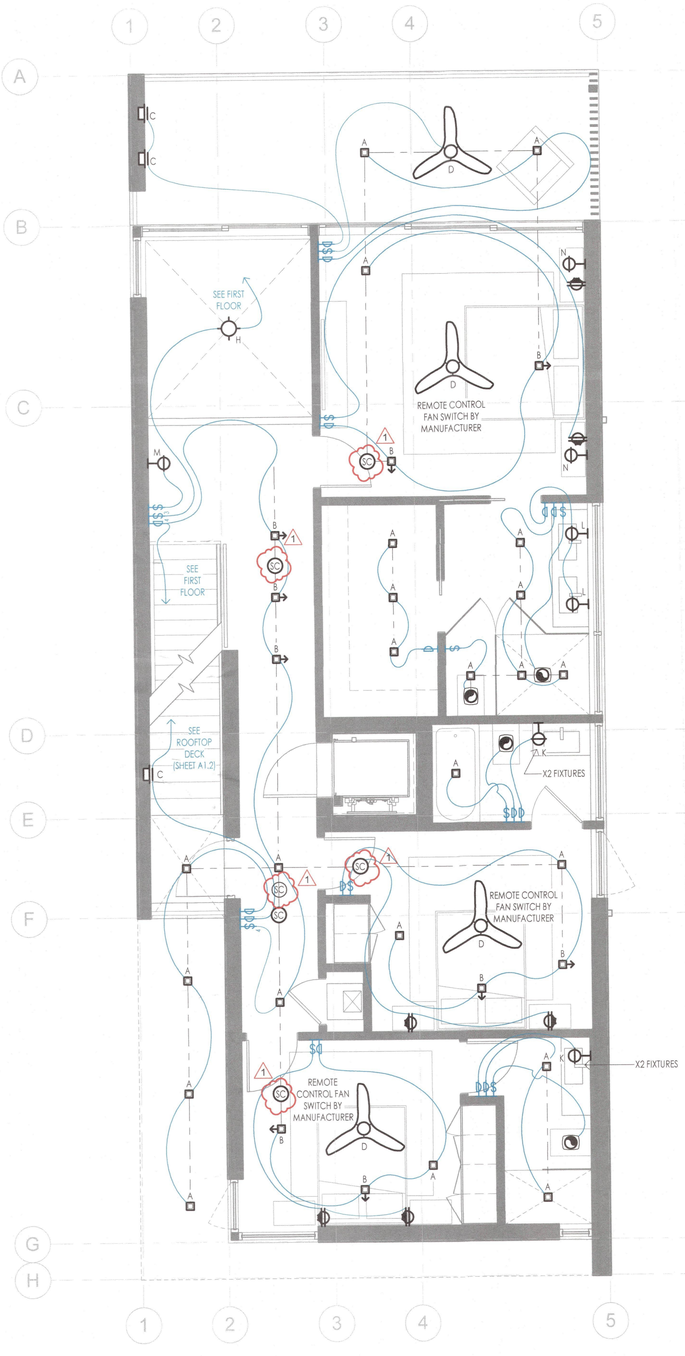

2 E1.2 LIGHTING PLAN - SECOND FLOOR
1/4" = 1'-0"

LIGHTING LEGEND

	RECESSED LIGHT FIXTURE
	RECESSED LIGHT FIXTURE (REPLACE EXISTING)
	RECESSED ADJUSTABLE LIGHT FIXTURE
	SURFACE MOUNTED PUCK LIGHT
P	PENDANT FIXTURE
	GARAGE DOOR OPENER, CEILING MOUNTED
	4' 2-TUBE SURFACE MOUNT FLUORESCENT LIGHT FIXTURE
	2-HEAD SECURITY LIGHT W/ MOTION SENSOR
	STRIP LIGHT
	EXHAUST FAN
	RECESSED MULTI LAMP FIXTURE
	WALL MOUNTED LIGHT FIXTURE
	WALL MOUNTED LIGHT FIXTURE (REPLACE EXISTING)
	TUBE FLUORESCENT STRIP LIGHT FIXTURE
	EXTERIOR FLOOR-MOUNT PHOTOVOLTAIC LIGHT FIXTURE

RECEPTACLE LEGEND

	HALF SWITCHED DUPLEX RECEPTACLE
	HALF SWITCHED FLOOR DUPLEX RECEPTACLE
	QUADPLEX RECEPTACLE - AFI (ARC FAULT INTERRUPTION)
	DUPLEX RECEPTACLE - AFI (ARC FAULT INTERRUPTION)
	LOW-PROFILE EXT. RECEPTACLE POST
J	RECESSED CEILING MOUNTED J-BOX
	RECEPTACLE PER EQUIPMENT MANUFACTURER'S REQ.
	220V RECEPTACLE, FIELD VERIFY MOUNTING HEIGHT

SWITCHING LEGEND

$	SINGLE-POLE SWITCH MOUNT AT 40" A.F.F. U.N.O.
$3	THREE-WAY SWITCH MOUNT AT 40" A.F.F. U.N.O.
	SINGLE-POLE DIMMER SWITCH MOUNT AT 40" A.F.F. U.N.O.
3	THREE-WAY DIMMER MOUNT AT 40" A.F.F. U.N.O.
F	FAN SWITCH
WB	WATER BUG

MISCELLANEOUS

	TELEPHONE / DATA RECEPTACLE MOUNT HORIZ. AT BASE
TV	TELEVISION / CABLE OUTLET
T H	THERMOSTAT AT 60" A.F.F. (FIELD LOCATE) & HUMIDISTAT
	MULTI-OUTLET RACEWAY (PLUG MOLD) AT 12" O.C.
	GARAGE DOOR OPENER, CEILING MOUNTED.
	ELECTRICAL METER
	MAIN ELECTRICAL PANEL & DISTRIBUTION BOARD
	DISCONNECT (SAFETY SWITCH) SIZED PER EQUIPMENT
	CEILING FAN (PROVIDE RHEOSTAT AS RECOMMENDED)
ICP	IRRIGATION CONTROL PANEL
SD	SMOKE DETECTOR
SC	SMOKE/CARBON MONOXIDE DETECTOR
	PREWIRE SHADE- POWERED ON RIGHT SIDE OF SHADE
	DRAPE
	GARAGE DOOR OPENER, CONTROL SWITCH
	PUMP MOTOR (IN-LINE RECIRCULATING PUMP)
K P	KEYPAD
DC	DOORBELL CHIME
	GARBAGE DISPOSAL W/ AIR SWITCH
WT	WINDOW TREATMENT SWITCH
WP	WATERPROOF
GFI	GROUND FAULT INTERRUPTED
DD	DEDICATED OUTLET

ELECTRICAL NOTES

1. ALL LIGHTING FIXTURES SHOWN ON THE GROUND FLOOR CONNECTED TO A WALL SWITCH ARE TO BE WIRED WITH LOW-VOLTAGE, AS REQ.
2. COORDINATE HEIGHTS AND LOCATIONS OF ALL FIXTURES AND OUTLETS WITH I.D. DRAWINGS.
3. ALL NEW WORK SHALL CONFORM TO FBC 2020 - ENERGY CONSERVATION CODE. AS REQ.
4. ALL NEW WORK SHALL CONFORM TO THE CURRENT NEC CODE.

leader DESIGNSTUDIO
Leader Design Studio, LLC
FL-AR98232

1003 North Orange Ave., Suite A2
Sarasota, Florida 34326
O: (941) 404-8055

GENERAL CONTRACTOR
The Vision Group, LLC
1900 Main Street Suite 205
Sarasota, Florida 34228
O: (941) 357-4040

STRUCTURAL ENGINEER
Apex Consulting Engineers
4315 53rd Avenue East
Bradenton, Florida 34203
O: (941) 365-1900

ENERGY & SUSTAINABILITY CONSULTANTS
ESC, LLC
1348 Fruitville Road
Sarasota, Florida 34236
O: (941) 957-1100

INTERIOR DESIGNER
SAWA Design Studio
1003 North Orange Ave., Suite A2
Sarasota, Florida 34236
O: (941) 564-9291

MAJHER RESIDENCE

7017 Longboat Drive North
Longboat Key, 34228

Project number	LDS-2203
Date	04.27.2023
Drawn by	DM
Checked by	CL
Phase	PERMIT SET

SEAL

STATE OF FLORIDA · CHRISTOPHER R. LEADER · AR98232 · REGISTERED ARCHITECT

"To the best of the Architect's or Engineer's knowledge, the plans and specifications comply with the applicable minimum building codes and applicable fire safety standards as determined by local authority in accordance with Chapter 553 and 663 of Florida Statutes."

Christopher Leader
AR 98232

REVISION

No.	Description	Date
1	BLDG. DEPT. COMMENTS	08/16/23

BLDG PERMIT PLANS
FILE
Copy of Record

SHEET

LIGHTING & POWER PLANS

RECEIVED
SEP 14 2023
TOWN OF LONGBOAT KEY
Planning, Zoning & Building

E1.2

LIGHTING LEGEND

	RECESSED LIGHT FIXTURE
	RECESSED LIGHT FIXTURE (REPLACE EXISTING)
	RECESSED ADJUSTABLE LIGHT FIXTURE
	SURFACE MOUNTED PUCK LIGHT
	PENDANT FIXTURE
	GARAGE DOOR OPENER, CEILING MOUNTED
	4' 2-TUBE SURFACE MOUNT FLUORESCENT LIGHT FIXTURE
	2-HEAD SECURITY LIGHT W/ MOTION SENSOR
	STRIP LIGHT
	EXHAUST FAN
	RECESSED MULTI LAMP FIXTURE
	WALL MOUNTED LIGHT FIXTURE
	WALL MOUNTED LIGHT FIXTURE (REPLACE EXISTING)
	TUBE FLUORESCENT STRIP LIGHT FIXTURE
	EXTERIOR FLOOR-MOUNT PHOTOVOLTAIC LIGHT FIXTURE

RECEPTACLE LEGEND

	HALF SWITCHED DUPLEX RECEPTACLE
	HALF SWITCHED FLOOR DUPLEX RECEPTACLE
	QUADPLEX RECEPTACLE - AFI (ARC FAULT INTERRUPTION)
	DUPLEX RECEPTACLE - AFI (ARC FAULT INTERRUPTION)
	LOW-PROFILE EXT. RECEPTACLE POST
J	RECESSED CEILING MOUNTED J-BOX
	RECEPTACLE PER EQUIPMENT MANUFACTURER'S REQ.
	220V RECEPTACLE, FIELD VERIFY MOUNTING HEIGHT

SWITCHING LEGEND

$	SINGLE-POLE SWITCH MOUNT AT 40" A.F.F. U.N.O.
$3	THREE-WAY SWITCH MOUNT AT 40" A.F.F. U.N.O.
D	SINGLE-POLE DIMMER SWITCH MOUNT AT 40" A.F.F. U.N.O.
D3	THREE-WAY DIMMER MOUNT AT 40" A.F.F. U.N.O.
F	FAN SWITCH
WB	WATER BUG

MISCELLANEOUS

	TELEPHONE / DATA RECEPTACLE MOUNT HORIZ. AT BASE
TV	TELEVISION / CABLE OUTLET
T H	THERMOSTAT AT 60" A.F.F. (FIELD LOCATE) & HUMIDISTAT
	MULTI-OUTLET RACEWAY (PLUG MOLD) AT 12" O.C.
	GARAGE DOOR OPENER, CEILING MOUNTED,
	ELECTRICAL METER
	MAIN ELECTRICAL PANEL & DISTRIBUTION BOARD
	DISCONNECT (SAFETY SWITCH) SIZED PER EQUIPMENT
	CEILING FAN (PROVIDE RHEOSTAT AS RECOMMENDED)
ICP	IRRIGATION CONTROL PANEL
SD	SMOKE DETECTOR
SC	SMOKE/CARBON MONOXIDE DETECTOR
	PREWIRE SHADE- POWERED ON RIGHT SIDE OF SHADE
	DRAPE
	GARAGE DOOR OPENER, CONTROL SWITCH
	PUMP MOTOR (IN-LINE RECIRCULATING PUMP)
K P	KEYPAD
DC	DOORBELL CHIME
	GARBAGE DISPOSAL W/ AIR SWITCH
WT	WINDOW TREATMENT SWITCH
WP	WATERPROOF
GFI	GROUND FAULT INTERRUPTED
DD	DEDICATED OUTLET

ELECTRICAL NOTES

1. ALL LIGHTING FIXTURES SHOWN ON THE GROUND FLOOR CONNECTED TO A WALL SWITCH ARE TO BE WIRED WITH LOW-VOLTAGE, AS REQ.
2. COORDINATE HEIGHTS AND LOCATIONS OF ALL FIXTURES AND OUTLETS WITH I.D. DRAWINGS.
3. ALL NEW WORK SHALL CONFORM TO FBC 2020 - ENERGY CONSERVATION CODE, AS REQ.
4. ALL NEW WORK SHALL CONFORM TO THE CURRENT NEC CODE.

LIGHTING FIXTURE SCHEDULE

MARK	TEMP.	MANUFACTURER	FIXTURE	MODEL NUMBER	FINISH	LAMPS	HOUSING NUMBER	NOTES
A	3000K	ELCO LIGHTING	4" ROUND LED BAFFLE LIFHT	EL41030W	WHITE	LED	GC TO CONFIRM HOUSING	CERTIFIED WET LOCATION RATED
B	3000K	ELCO LIGHTING	4" ADJUSTABLE GIMBAL INSERT	EL41430DXW	WHITE	LED	GC TO CONFIRM HOUSING	WWW.ELCOLIGHTING.COM
C	3000K	WAC LIGHTING	LED-ME STEP LIGHT	WL-LED100-C-SS	WHITE	LED	--	--
D	3000K	MODERNFORMS	MORPHEUS	FR-60L-GW	WHITE	--	--	WWW.MODERNFORMS.COM
E	3000K	WAC LIGHTING	MOD 6" OUTDOOR	WS-W65607-WT	WHITE	LED	--	WWW.WACLIGHTING.COM
F	3000K	COOPER LIGHTING	METALUX WPLD	4WPLD3130R9	WHITE	LED	--	WWW.COOPERLIGHTING.COM
G	3000K	KUZCO	FALCON ROUND FLUSH MOUNT	FM10605-WH	WHITE	LED	--	WWW.KUZCOLIGHTING.COM
H	3000K	TUDO & CO	NORA LEATH. STRAP WOODEN SCANDI	--	WHITE	LED	--	WWW.TUDOANDO.COM
J	3000K	TBD	--	--	WHITE	LED	--	1,000-1,5000 ALLOWANCE
K	3000K	CEDAR & MOSS	TILT CONE	F831L-WHF	WHITE	LED	--	WWW.CEDAR & MOSS.COM
L	3000K	RICHARD BRILLIANT WILLING	DIMPLE SCONCE	DP-WD-S1-AA01-30-120_TM_DEX-IP20	WHITE	LED	--	WWW.RBW.COM
M	3000K	--	--	--	--	--	--	--
N	--	--	--	--	--	--	--	--
--	--	--	--	--	--	--	--	--
--	--	--	--	--	--	--	--	--
--	--	--	--	--	--	--	--	--
--	--	--	--	--	--	--	--	--
--	--	--	--	--	--	--	--	--
--	--	--	--	--	--	--	--	--
--	--	--	--	--	--	--	--	--

leader DESIGNSTUDIO

Leader Design Studio, LLC
FL-AR98232

1003 North Orange Ave., Suite A2
Sarasota, Florida 34326
O: (941) 404-8055

GENERAL CONTRACTOR
The Vision Group, LLC
1900 Main Street Suite 205
Sarasota, Florida 34228
O: (941) 357-4040

STRUCTURAL ENGINEER
Apex Consulting Engineers
4315 53rd Avenue East
Bradenton, Florida 34203
O: (941) 365-1900

ENERGY & SUSTAINABILITY CONSULTANTS
ESC, LLC
1348 Fruitville Road
Sarasota, Florida 34236
O: (941) 957-1100

INTERIOR DESIGNER
SAWA Design Studio
1003 North Orange Ave., Suite A2
Sarasota, Florida 34236
O: (941) 564-9291

MAJHER RESIDENCE

7017 Longboat Drive North
Longboat Key, 34228

Project number	LDS-2203
Date	04.27.2023
Drawn by	DM
Checked by	CL
Phase	PERMIT SET

SEAL

STATE OF FLORIDA · CHRISTOPHER A. LEADER · AR98232 · REGISTERED ARCHITECT

"To the best of the Architect's or Engineer's knowledge, the plans and specifications comply with the applicable minimum building codes and applicable fire safety standards as determined by local authority in accordance with Chapter 553 and 663 of Florida Statutes."

Christopher Leader
AR 98232

REVISION

No.	Description	Date

BLDG PERMIT PLANS
FILE
Copy of Record

SHEET

LIGHTING FIXTURE SCHEDULE

RECEIVED
SEP 14 2023
TOWN OF LONGBOAT KEY
Planning, Zoning & Building

E1.3