TOWN OF LONGBOAT KEY
PUBLIC WORKS DEPARTMENT
PERMIT PLANS

SLEEPY LAGOON
GENERAL HARRIS, PENFIELD, MARBURY

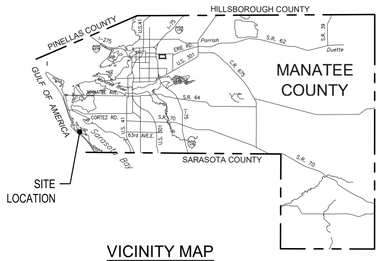

VICINITY MAP
NOT TO SCALE

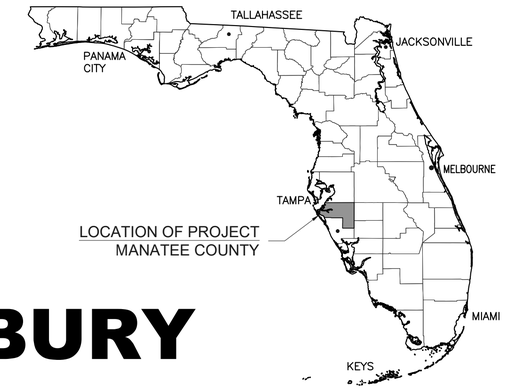

KEY MAP
NOT TO SCALE

INDEX OF PLANS

SHEET NO.	SHEET TITLE
1	COVER/INDEX
2	SUMMARY OF QUANTITIES & ITEM NOTES
3	GENERAL NOTES
4	BASELINE CONTROL PLAN
5	PROJECT LAYOUT
6	EXISTING DRAINAGE MAP
7	PROPOSED DRAINAGE MAP
8	TYPICAL SECTIONS
9-10	SUMMARY OF DRAINAGE STRUCTURES
11-13	PLAN AND PROFILE (GENERAL HARRIS STREET)
14-16	PLAN AND PROFILE (PENFIELD STREET)
17-20	PLAN AND PROFILE (MARBURY LANE)
21	DRAINAGE STRUCTURES (GENERAL HARRIS STREET)
22	DRAINAGE STRUCTURES (PENFIELD STREET)
23	DRAINAGE STRUCTURES (MARBURY LANE)
24	OUTFALL OUTLET PLAN
25	OUTFALL PROFILES
26-27	CROSS SECTIONS (GENERAL HARRIS STREET)
28-30	CROSS SECTIONS (PENFIELD STREET)
31-33	CROSS SECTIONS (MARBURY LANE)
34-37	DETAILS
38-43	UTILITY ADJUSTMENT PLAN
44-46	SIGN AND PAVEMENT MARKING PLAN
47	TRAFFIC CONTROL PLAN
48-49	STORMWATER POLLUTION PREVENTION PLAN
50	EROSION CONTROL DETAILS
51-53	EROSION CONTROL PLAN
54-56	EASEMENT PLAN

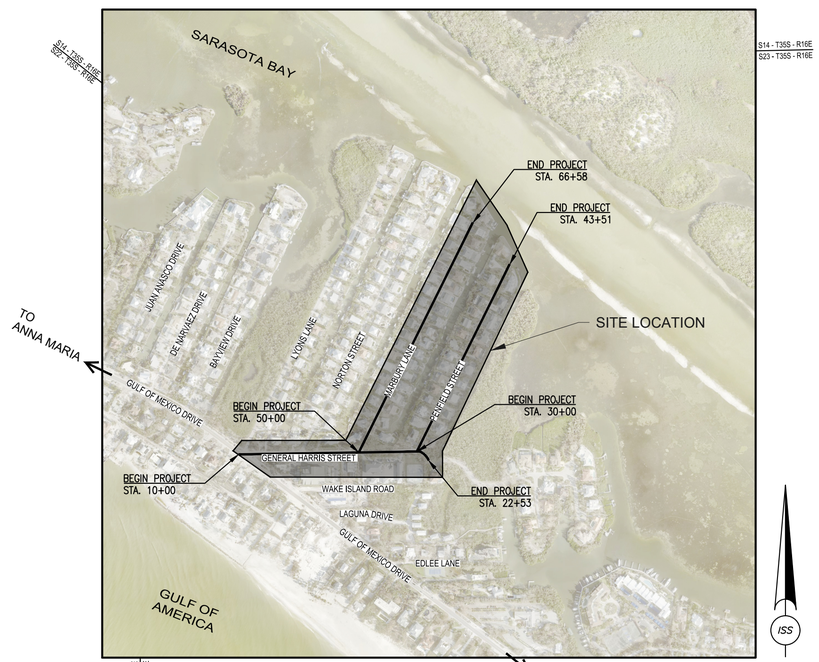

LOCATION MAP
NOT TO SCALE

TOWN OF LONGBOAT KEY COMMISSION

GARY COFFIN	TOWN COMMISSIONER	DISTRICT 1
PENNY GOLD	VICE MAYOR - TOWN COMMISSIONER	DISTRICT 2
NICHOLAS GLADDING	TOWN COMMISSIONER	DISTRICT 3
DEBRA WILLIAMS	MAYOR - TOWN COMMISSIONER	DISTRICT 4
SARAH KARON	TOWN COMMISSIONER	DISTRICT 5
B.J. BISHOP	TOWN COMMISSIONER	AT-LARGE
STEVE BRANHAM	TOWN COMMISSIONER	AT-LARGE

UTILITIES PROVIDERS LIST

SUNSHINE 811 DESIGN TICKET #: 315506291

1. JOE SAMBLANET
   LONGBOAT KEY UTILITIES (WATER, WASTEWATER)
   PHONE: (941) 316-6411 EXT. 2216
1. GUY MATRICCIANI
   LONGBOAT KEY UTILITIES (ELECTRIC, FIBER)
   PHONE: (941) 316-1988
3. BRIANA VELEZ
   TECO PEOPLES GAS - SARASOTA
   PHONE: (813) 275-3700 EXT. 8326
4. MCI (COMM, FIBER)
   INVESTIGATIONS TEAM
   PHONE: (800) 624-9675 EXT. 2
5. FERNANDO MORALES
   HOTWIRE COMMUNICATIONS
   PHONE: (954) 296-7765
6. KEVIN TALECKI / MIKE GAMBOA
   AT&T (COMM, FIBER)
   PHONE: (610) 200-3365
7. DANIEL LEILLO
   FRONTIER COMMUNICATIONS
   PHONE: (941) 504-9662
8. VERIZON WIRELESS (FIBER)
   NICK WIEKLINSKI
9. EDGAR AGUILAR / JAMIE PURNELL
   INVESTIGATIONS TEAM FLORIDA POWER & LIGHT - MANATEE
   PHONE: (386) 586-6403
10. CHAD EVENER
    COMCAST (CATV)
    PHONE: (941) 356-1564

CONTACTS ARE PER ONE-CALL TICKET AND LOCAL CONTACTS MAY VARY.

LENGTH OF PROJECT

	LINEAR FEET	MILES
ROADWAY	4,160	0.79
BRIDGES	0	0.0
GROSS LENGTH OF PROJECT	4,160	0.79
EXCEPTIONS	0	0.0
NET LENGTH OF PROJECT	4,160	0.79

GOVERNING STANDARD PLANS:
FLORIDA DEPARTMENT OF TRANSPORTATION, FY 2026-27 STANDARD PLANS FOR ROAD AND BRIDGE CONSTRUCTION AND APPLICABLE INTERIM REVISIONS (IRs).

STANDARD PLANS FOR ROAD CONSTRUCTION AND ASSOCIATED IRs ARE AVAILABLE AT THE FOLLOWING WEBSITE:
HTTP://WWW.FDOT.GOV/DESIGN/STANDARDPLANS

GOVERNING STANDARD SPECIFICATIONS:
FLORIDA DEPARTMENT OF TRANSPORTATION, FY 2025-26 STANDARD SPECIFICATIONS FOR ROAD AND BRIDGE CONSTRUCTION CAN BE FOUND AT THE FOLLOWING WEBSITE:
HTTPS://WWW.FDOT.GOV/PROGRAMMANAGEMENT/IMPLEMENTED/SPECBOOKS/DEFAULT.SHTM

GOVERNING DESIGN STANDARDS:
MANUAL OF UNIFORM MINIMUM STANDARDS FOR DESIGN, CONSTRUCTION, AND MAINTENANCE FOR STREETS AND HIGHWAYS (COMMONLY REFERRED TO AS THE "FLORIDA GREEN BOOK" CAN BE FOUND AT THE F0LLOWING WEBSITE:
HTTPS://WWW.FDOT.GOV/ROADWAY/FLORIDAGREENBOOK/FGB.SHTM

AS AMENDED BY CONTRACT DOCUMENTS, PAY ITEM NOTES PRESENT MODIFICATIONS TO FDOT SPECIFICATIONS.

NOTE: THE SCALE OF THESE PLANS MAY HAVE CHANGED DUE TO REPRODUCTION.

Know what's below. Call before you dig.

ATTENTION SHOULD BE DIRECTED TO THE FACT THAT THESE PLANS MAY HAVE BEEN REDUCED IN SIZE AND SCALE BY REPRODUCTION. PLEASE NOTE THAT THIS MUST BE CONSIDERED WHEN OBTAINING SCALED DATA.

NO.	DATE:	REVISION

INFRASTRUCTURE SOLUTION SERVICES
An HR Green Company
7319 Merchant Court
Sarasota, FL 34240
Phone: (941) 526-0813
FBPE CA# 29992

SEAL

TOWN OF LONGBOAT KEY PROJECT MANAGER:
JENNIFER FEHRS, P.E.
TOWN ENGINEER

APPROVED BY

NAME: **DEVYN M. BROWN, P.E.**
TITLE: **ENGINEER OF RECORD**
FLORIDA P.E. #: **#68380**
DATE:

TOWN OF LONGBOAT KEY
PUBLIC WORKS DEPARTMENT
600 GENERAL HARRIS STREET
LONGBOAT KEY, FL 34228
PHONE (941) 316-1988

SLEEPY LAGOON
GENERAL HARRIS, PENFIELD, MARBURY

DRAWING TITLE:			
COVER/INDEX			
PROJ. MGR.: **DMB**	DRWN. BY: **WSH**	CHKD. BY: **MWM**	PROJECT NO.: **LBK003**
SCALE: **N/A**	DATE: **05/15/2026**		SHEET NO.: **1** OF **56**

10/8/2026 3:18:10 PM

Z:\Projects\Sarasota Region\Longboat Key, Town of\LBK003 – 2504561 – Sleepy Lagoon Gen Harris, Penfield, Marbury\Drawings\ISS DWG\2 Eng\Final Dwg\LBK003 – 1 – COVER.dwg

SUMMARY OF PAY ITEMS

ITEM NUMBER	ITEM DESCRIPTION	UNITS	QUANTITY TOTAL
ROADWAY			
0101-1	MOBILIZATION (5%)	LS	1
0102-1	MAINTENANCE OF TRAFFIC (5%)	LS	1
0104-10-3	SEDIMENT BARRIER	LF	7,800
0104-11	FLOATING TURBIDITY BARRIER	LF	190
0104-18	INLET PROTECTION SYSTEM	EA	31
0107-1	LITTER REMOVAL	AC	1.8
0107-2	MOWING	AC	1.8
0110-1-1	CLEARING AND GRUBBING	AC	2.6
0110-4-10	REMOVAL OF EXISTING CONCRETE	SY	750
0110-7-1	MAILBOX, F&I, SINGLE	EA	70
0120-1	REGULAR EXCAVATION	CY	380
0120-6	EMBANKMENT	CY	725
0160-4	12" TYPE B STABILIZATION (LBR-40)	SY	10,554
0285-704	OPTIONAL BASE, BASE GROUP 04 (6" MINIMUM, LBR 100 MINIMUM)	SY	10,554
0327-70-6	MILLING EXITING ASPHALT PAVEMENT, 1 1/2" AVG DEPTH	SY	8,713
0334-1-52	TYPE SP-12.5, STRUCTURAL COURSE (TRAFFIC B, PG 76-22 PMA) (1.5")	SY	8,729
0520-0000	CONCRETE CURB, 2' VALLEY GUTTER	LF	0
0520-2100	CONCRETE CURB, 2" MIAMI (TYPE "E" W/ SPECIAL PROFILE)	LF	7,875
0570-1-2	PERFORMANCE TURF, SOD	SY	3,500
	DRIVEWAY RESTORATION	EA	70
	FENCING RESTORATION	LF	100
SIGNING			
0700-1-50	SINGLE POST SIGN, RELOCATE	EA	1
0700-1-111	SINGLE COLUMN GROUND SIGN ASSEMBLY. F&I GROUND MOUNT, LESS THAN 12 SF	EA	1
0710-090	PAINTED PAVEMENT MARKINGS - FINAL SURFACE	LS	1
0710-11-101	YELLOW - 6" WIDE DOUBLE STRIPE (LANE LINE)	LF	150
0711-11-125	WHITE - 24" WIDE SOLID STRIPE (STOP BAR) THERMOPLASTIC	LF	33
DRAINAGE			
0425-1521	INLETS, DT BOT, TYPE C, <10' (GRATE INLET)	EA	30
0425-1521	INLETS, DT BOT, TYPE C, <10' (BUBBLER BOX)	EA	1
0425-1711	MODIFIED VALLEY GUTTER INLET, <10	EA	0
0425-2-71	MANHOLES, J-7, <10' (JUNCTION BOX)	EA	6
0430-175-115	PIPE CULVERT, OPTIONAL MATERIAL, ELLIP/ARCH, 15" S/CD (15" RCP)	LF	51
0430-175-118	PIPE CULVERT, OPTIONAL MATERIAL, ELLIP/ARCH, 18" S/CD (18" RCP)	LF	339
0430-175-118	PIPE CULVERT, OPTIONAL MATERIAL, ELLIP/ARCH, 18" S/CD (18" HDPE)	LF	43
0430-175-124	PIPE CULVERT, OPTIONAL MATERIAL, ELLIP/ARCH, 24" S/CD (24" RCP)	LF	0
0430-175-215	PIPE CULVERT, OPTIONAL MATERIAL, ELLIP/ARCH, 15" S/CD (12"X18" ERCP)	LF	238
0430-175-218	PIPE CULVERT, OPTIONAL MATERIAL, ELLIP/ARCH, 18" S/CD (14"X23" ERCP)	LF	680
0430-524-100	STRAIGHT CONCRETE ENDWALLS, 18", SINGLE, 0 DEGREES, ROUND (SEAWALL PENETRATION)	EA	3
	IN-LINE CHECK VALVE - TIDE FLEX CHECKMATE	EA	11
	GALVANIZED STEEL MANATEE GRATE FOR 18" PIPE	EA	11
PUMPS			
	STORMWATER PUMPS	EA	0
	WET WELL	EA	0
	TRASH RACK	EA	0
OTHER/MISC.			
	LANDSCAPE RESTORATION	LS	1
	UTILITY RELOCATIONS / ADJUSTMENTS	LS	1

PAY ITEM NOTES

BASE BID PAY ITEM NOTES: THE FOLLOWING PAY ITEM NOTES EMPHASIZE PARTS OF THE FDOT STANDARD SPECIFICATIONS FOR ROAD AND BRIDGE CONSTRUCTION (2025-26) OR MODIFICATIONS TO THE SPECIFICATIONS BY THE PLANS, AND/OR SPECIAL PROVISIONS. ITEMS CODED PER FDOT 2023 BASIS OF ESTIMATE

1. PAY ITEM 0101-1, LUMP SUM PRICE INCLUDES PROJECT LAYOUT AND DETAILED CONSTRUCTION SCHEDULE(S). INCLUDES ALL LABOR AND EQUIPMENT NECESSARY FOR LITTER REMOVAL AND MOWING.

2. PAY ITEM 0102-1, LUMP SUM PRICE INCLUDES SIGNS, POSTS, ACCESSORIES, BARRICADES, CONNECTIONS, CONES, PORTABLE CHANGEABLE (VARIABLE) MESSAGE SIGNS, INSTALLATION, AND REMOVAL. INCLUDES DRIVEWAY MAINTENANCE DURING CONSTRUCTION TO ALLOW ACCESS TO PROPERTY. MAILBOXES DAMAGED BY CONTRACTOR SHALL BE REPLACED AT CONTRACTOR'S EXPENSE. INCLUDES NOTIFICATIONS PER SECTION 102 OF THE FDOT STANDARD SPECIFICATIONS FOR ROAD AND BRIDGE CONSTRUCTION. INCLUDES ALL ITEMS PER TEMPORARY TRAFFIC CONTROL PLAN.

3. PAY ITEM 0104-10-3, INCLUDES FURNISHING AND INSTALLING, AT MINIMUM, THE EROSION CONTROL MEASURES SHOWN IN THE PLANS AND INCORPORATED BY REFERENCE IN THE PLAN NOTES, COMPLYING WITH SECTION 104 OF THE FDOT STANDARD SPECIFICATIONS FOR ROAD AND BRIDGE CONSTRUCTION, AND MAKING ADJUSTMENTS AS NEEDED TO EROSION CONTROL MEASURES AS THE JOB PROGRESSES TO PREVENT UNFORESEEN EROSION. INCLUDES REMOVAL OF EROSION CONTROL MEASURES AT PROJECT COMPLETION.

4. PAY ITEM 0110-1-1, LUMP SUM PRICE INCLUDES REMOVAL AND DISPOSAL OF DRAINAGE STRUCTURES, BUSHES, TREES, OTHER VEGETATION, STUMPS AND ROOT SYSTEMS, AND ALL OTHER FINISH SOIL LAYER. CLEARING AND GRUBBING LIMITS PRESENTED IN THE PLANS ARE APPROXIMATE. IT IS THE RESPONSIBILITY OF THE CONTRACTOR TO DETERMINE ACTUAL CONSTRUCTION LIMITS.

5. PAY ITEM 0120-1, SHALL BE PAID AS PLAN QUANTITY. UNIT PRICE INCLUDES DISPOSAL OF EXCESS EXCAVATED MATERIAL NOT SUITABLE FOR EMBANKMENT AS DEFINED BY THE PLANS AND INCLUDES ALL NECESSARY DITCH GRADING AND SHAPING AS SHOWN IN THE PLANS.

6. PAY ITEM 0160-4 (TYPE B STABILIZATION), PAYMENT WILL ONLY BE MADE FOR AREAS IN WHICH MIXING IS ACCOMPLISHED TO A DEPTH OF 12 INCHES.

7. PAY ITEM 430 SERIES MATERIAL SHALL BE REINFORCED CONCRETE (RCP), UNLESS OTHERWISE SPECIFIED OR DIRECTED BY TOWN ENGINEER.

8. PAY ITEM 0570-1-2, UNIT PRICE INCLUDES ALL LABOR, MATERIAL, EQUIPMENT, AND INCIDENTALS NECESSARY TO INSTALL ONE SQUARE YARD OF SOD IN ACCORDANCE WITH SPECIAL PROVISIONS WHICH INCLUDES, BUT IS NOT LIMITED TO, WATERING FERTILIZER AND MAINTENANCE REQUIRED FOR A HEALTHY STAND OF CRASS AND MEET THE ESTABLISHMENT PERIOD REQUIREMENTS OF FDOT STANDARD SPECIFICATION 570-4. TURF SHALL CONSIST OF PENSACOLA BAHIA OR BERMUDA SOD UNLESS OTHERWISE APPROVED BY THE TOWN OF LONGBOAT KEY. UNIT PRICE INCLUDES FURNISHING AND INSTALLING PINS FOR LAPPING AND PINNING SOD PER THE PLANS, AND SCARIFYING SOIL SURFACES AS NECESSARY AND AS DIRECTED BY THE TOWN OF LONGBOAT KEY PRIOR TO SOD PLACEMENT. FINISH SOIL LAYER IS TO BE PAID IN PAY ITEM, INCLUDING ALL LABOR, MATERIAL, EQUIPMENT, AND INCIDENTALS NECESSARY TO INSTALL.

GENERAL NOTES

1. FOR THE PURPOSE OF DETERMINING THEIR COST TO PERFORM THE WORK, THE CONTRACTOR SHALL PHYSICALLY EXAMINE THE ENTIRE PROJECT SITE AND INFORM THEMSELVES FULLY IN REGARD TO ALL CONDITIONS PERTAINING TO WHERE ALL ASPECTS OF THE CONSTRUCTION ARE TO BE PERFORMED. CLEARING AND GRUBBING LIMITS PRESENTED IN THE PLANS ARE APPROXIMATE. IT IS THE RESPONSIBILITY OF THE CONTRACTOR TO DETERMINE ACTUAL CONSTRUCTION LIMITS.

2. THE CONTRACTOR SHALL HAVE ALL REQUIRED PERMITS IN-HAND PRIOR TO BEGINNING CONSTRUCTION AND SHALL PERFORM ALL WORK IN ACCORDANCE WITH THE REQUIREMENTS OF THE PERMITS OBTAINED BY THE NECESSARY REGULATORY AGENCIES AND THOSE PERMITS OBTAINED BY THE CONTRACTOR. FLORIDA DEPARTMENT OF ENVIRONMENTAL PROTECTION (FDEP), SOUTHWEST FLORIDA WATER MANAGEMENT DISTRICT (SWFWMD), AND/OR ARMY CORPS OF ENGINEERS (ACOE) PERMITS SHALL BE FURNISHED BY THE OWNER. THE CONTRACTOR SHALL OBTAIN AND COMPLY WITH ALL OTHER REQUIRED PERMITS TO INCLUDE FDEP GENERIC PERMIT FOR DISCHARGE OF PRODUCED GROUND WATER FROM ANY NON-CONTAMINATED SITE ACTIVITY.

3. THE CONTRACTOR SHALL PUT FORTH EVERY REASONABLE EFFORT TO MINIMIZE DISRUPTION AND DISTURBANCE OF ADJACENT PROPERTIES. ACCESS BY PROPERTY OWNERS TO THEIR PROPERTY SHALL BE MAINTAINED AT ALL TIMES.

4. GRADES SHOWN IN THE PLANS ARE FINISH GRADES.

5. B.M. DATUM IS NORTH AMERICAN VERTICAL DATUM OF 1988 (NAVD 88).

6. THE CONTRACTOR IS RESPONSIBLE FOR PROTECTING AND PRESERVING ALL PROPERTY CORNERS AND MONUMENTS SHOWN ON THE DRAWINGS OR FOUND DURING CONSTRUCTION. IF A PROPERTY CORNER OR MONUMENT IS DESTROYED OR DISTURBED, THE CONTRACTOR SHALL HAVE IT REPLACED AND CERTIFIED BY A PROFESSIONAL SURVEYOR AND MAPPER REGISTERED IN THE STATE OF FLORIDA. ALL COSTS FOR PRESERVING, REPLACING, AND CERTIFYING PROPERTY CORNERS AND MONUMENTS WILL BE INCLUDED IN THE PAY ITEM FOR MOBILIZATION.

7. IF A CORNER MONUMENT IS IN DANGER OF BEING DESTROYED AND HAS NOT BEEN PROPERLY REFERENCED, THE TOWN'S SURVEYOR AND ENGINEER SHOULD BE NOTIFIED WITHOUT DELAY.

8. ANY N.A.V.D. – '88 MONUMENT WITHIN THE LIMITS OF CONSTRUCTION IS TO BE PROTECTED. IF IN DANGER OF DAMAGE, NOTIFY THE TOWN'S PM AND ENGINEER.

9. THE LOCATION OF ANY UTILITIES (IF ANY) SHOWN IN THE PLAN ARE APPROXIMATE ONLY. THE EXACT LOCATION SHALL BE DETERMINED BY THE CONTRACTOR DURING CONSTRUCTION AND VERIFIED PRIOR TO PROCEEDING WITH ROADSIDE WORK.

10. UTILITIES ARE TO BE ADJUSTED BY UTILITY OWNERS. CONTRACTOR SHALL COORDINATE WITH UTILITY COMPANIES WHEN ADJUSTMENTS ARE REQUIRED.

11. THE CONTRACTOR IS RESPONSIBLE FOR THE PROTECTION OF ALL UTILITIES. THE INFORMATION SHOWN ON THESE DRAWINGS CONCERNING TYPE AND LOCATION OF UNDERGROUND AND OTHER UTILITIES IS BASED ON INFORMATION PROVIDED BY THE UTILITY OWNERS, AVAILABLE RECORDS, AND SURVEYED FIELD INFORMATION. THE INFORMATION MAY NOT REFLECT ACTUAL CONDITIONS, INCLUDE ALL UTILITIES IN THE AREA EITHER IN SERVICE OR ABANDONED, OR SHOW THE UTILITIES IN THE CORRECT HORIZONTAL OR VERTICAL LOCATIONS. THE CONTRACTOR SHALL MAKE HIS OWN DETERMINATION AS TO THE TYPE AND LOCATION OF UTILITIES AS NECESSARY TO ESTABLISH THEIR LOCATIONS AND AVOID DAMAGE. THE FOLLOWING UTILITIES SHOULD BE CONTACTED FOR INFORMATION CONCERNING TYPE AND LOCATION OF THEIR FACILITIES. THE LIST MAY NOT INCLUDE ALL UTILITIES IN THE AREA.

UTILITY OWNER	PHONE NUMBER	CONTACT
LONGBOAT KEY UTILITIES	(941) 316-6411 EXT. 2216	JOE SAMBLANET
TECO PEOPLES GAS – SARASOTA	(813) 743-7164	CHEYENNE THOMPSON
MCI (COMM, FIBER)	(800) 624-9675 EXT. 2	INVESTIGATIONS TEAM
HOTWIRE COMMUNICATIONS	(954) 699-0900	WALTER DAVILA
COMCAST (CATV)	(941) 356-1564	CHAD EVENER
AT&T (COMM, FIBER)	(610) 200-3365	KEVIN TALECKI / MIKE GAMBOA
FRONTIER COMMUNICATIONS	(941) 504-9662	DANIEL LEILLO
VERIZON WIRELESS (FIBER)		NICK WIEKLINSKI
FLORIDA POWER & LIGHT – MANATEE		
ONECALL	811*	811 OPERATOR

*CONTRACTOR SHALL CONTACT ONE-CALL A MINIMUM OF 5-DAYS PRIOR TO CONSTRUCTION.

12. PRIOR TO ANY SCHEDULED INTERRUPTION OF UTILITY SERVICE, THE CONTRACTOR SHALL COORDINATE SUCH INTERRUPTION WITH THE UTILITY PROVIDER AND PROVIDE A MINIMUM 24-HOUR NOTICE TO ALL AFFECTED PARTIES. THE CONTRACTOR SHALL NOTIFY THE ELECTRIC UTILITY PROVIDER A MINIMUM OF TWO WEEKS PRIOR TO CONSTRUCTION IN THE VICINITY OF THEIR FACILITIES.

13. PRIOR TO COMMENCING CONSTRUCTION, CONTRACTOR SHALL INSTALL ANY REQUIRED SILT FENCING OR INLET PROTECTION FOR SILT CONTROL. LOCATION SHALL BE AS SHOWN ON THE PLANS OR DIRECTED IN THE FIELD OR AS SPECIFIED BY THE APPLICABLE REGULATORY AGENCY STANDARDS.

14. ALL EROSION CONTROL ITEMS SHALL BE REMOVED UPON COMPLETION OF CONSTRUCTION UNLESS OTHERWISE DIRECTED BY THE TOWN OF LONGBOAT KEY.

15. THE CONTRACTOR IS EXPECTED TO MONITOR THE LONG-RANGE WEATHER FORECAST, AND SCHEDULE THE WORK DURING A PERIOD OF PREDICTED GOOD CONSTRUCTION WEATHER DURING THE CROSS-DRAIN INSTALLATIONS. NIGHT WORK WILL NOT BE AUTHORIZED EXCEPT IN EMERGENCY CONDITIONS AND ONLY AFTER ALL ELEMENTS OF NIGHT TRAFFIC CONTROLS THROUGH WORK ZONE ARE IMPLEMENTED.

16. THE CONTRACTOR SHALL BE RESPONSIBLE FOR ESTABLISHING A WORK SCHEDULE SO THAT ANY LOCATION UNDER CONSTRUCTION WILL NOT BE LEFT IN A HAZARDOUS CONDITION AT THE END OF ANY WORK PERIOD. NO TRENCHES SHALL BE ALLOWED TO REMAIN OPEN OVERNIGHT.

17. AT THE END OF EACH WORKDAY OR WHENEVER THE WORK ZONE BECOMES INACTIVE, ANY DROP-OFF ADJACENT TO THE SUBJECT TRAVEL PATH SHALL BE BACK-FILLED FLUSH WITH THE TRAVEL PATH OR SHALL BE PROTECTED WITH BARRICADES, TEMPORARY BARRIER WALL, OR APPROVED HANDRAIL.

18. THE CONTRACTOR IS TO STORE ALL EXCAVATED MATERIAL, TEMPORARY AND PERMANENT, WITHIN THE PROJECT LIMITS UTILIZING THE PROPER BEST MANAGEMENT PRACTICES (I.E. SILT FENCING AROUND THE EXCAVATED MATERIAL TO PREVENT OFFSITE RUNOFF). UPON COMPLETION OF THE PROJECT, THE CONTRACTOR SHALL RETURN ALL EXCESS SOIL TO THE UPLANDS AS NECESSARY TO COMPLETE FINAL GRADING. AN ACCEPTABLE ALTERNATE METHOD IS TO DISPOSE OF EXCESS EXCAVATED MATERIAL TO A LOCAL MUNICIPALITY APPROVED LANDFILL. IF AN ALTERNATE METHOD IS PREFERRED, THE CONTRACTOR SHALL SUBMIT DISPOSAL DOCUMENTATION TO THE TOWN OF LONGBOAT KEY AND TO THE SWFWMD.

19. CONTRACTOR SHALL SUBMIT HIS PLAN FOR DIVERSION OF CREEK/DITCH FLOW TO THE ENGINEER FOR APPROVAL PRIOR TO PERFORMING ANY EXCAVATION. THE NATURAL STREAM BED ADJACENT TO THE STRUCTURE SHALL NOT BE DISTURBED UNLESS ORDERED BY THE ENGINEER. EARTH BERMS WILL NOT BE PERMITTED FOR GREEK/DITCH DIVERSIONS.

20. DEWATERING WILL BE REQUIRED TO LOWER THE GROUNDWATER LEVEL TO AT LEAST THE BOTTOM OF THE EXCAVATED AREAS FOR THE CONSTRUCTION OF THE ROADWAY, HEADWALLS, PIPES, ETC. DEWATERING SHOULD BE MAINTAINED UNTIL FILL SOILS HAVE BEEN PLACED AT LEAST 12 INCHES ABOVE THE GROUNDWATER LEVEL.

21. UPON COMPLETION OF CONSTRUCTION ALL TERRAIN SHALL BE RESTORED TO ITS ORIGINAL STATUS AND WILL BE SODDED IN ACCORDANCE WITH THE PLANS AND SPECIFICATIONS.

22. BEFORE FINAL INSPECTION, THE CONTRACTOR SHALL TURN OVER TO THE TOWN OF LONGBOAT KEY A SET OF DRAWINGS SHOWING FIELD CHANGES AND ACTUAL INSTALLED CONDITIONS. THE CONTRACTOR SHALL PROVIDE TO THE TOWN OF LONGBOAT KEY WITH TWO (2) HARD COPIES AND ONE (1) ELECTRONIC COPY OF THE AS-BUILT PLANS IN AUTOCAD 2014. THE PLANS SHALL BE CERTIFIED BY A PROFESSIONAL SURVEYOR AND MAPPER REGISTERED IN THE STATE OF FLORIDA. ALL VALVES, FITTINGS, TRANSITIONS, AND MAJOR P.I. SHALL BE LOCATED IN THREE DIMENSIONS TO THE NEAREST TENTH OF ONE FOOT.

SUPPLEMENTAL GENERAL NOTES

1. THE CONTRACTOR SHALL PHYSICALLY EXAMINE THE PROJECT SITE AND INFORM HIMSELF FULLY IN REGARD TO ALL CONDITIONS PERTAINING TO THE PLACES WHERE THE WORK IS TO BE PERFORMED FOR THE PURPOSE OF DETERMINING HIS COST TO PERFORM THE WORK.

2. ASPHALT MILLINGS SHALL, WHERE APPLICABLE, BE HAULED OFFSITE TO AN APPROVED RECYCLE YARD AS DIRECTED BY THE TOWN.

3. ANY PUBLIC LAND CORNER MONUMENT WITHIN THE LIMITS OF CONSTRUCTION IS TO BE PROTECTED. IF A CORNER MONUMENT IS IN DANGER OF BEING DESTROYED AND HAS NOT BEEN PROPERLY REFERENCED, THE TOWN'S SURVEYOR AND ENGINEER SHOULD BE NOTIFIED WITHOUT DELAY.

4. DATUM FOR T.B.M.'S SHOWN IN THE PLANS IS NORTH AMERICAN VERTICAL DATUM OF 1988 (N.A.V.D.-'88).

5. THE LOCATION OF UTILITIES SHOWN IN THE PLANS ARE APPROXIMATE ONLY. LOCATION OF BURIED UTILITIES TO BE DETERMINED BY THE CONTRACTOR DURING CONSTRUCTION. IN THE EVENT THE CONTRACTOR ENCOUNTERS UTILITIES THAT CANNOT BE HANDLED WITHIN THE BID ITEMS FOR THE PROJECT, THE CONTRACTOR SHALL USE PROCEDURES SPELLED OUT IN THE GENERAL CONDITIONS.

6. UTILITIES ARE TO BE ADJUSTED BY THE APPROPRIATE UTILITY OWNER(S) AS NECESSARY. THE CONTRACTOR IS TO COORDINATE ADJUSTMENTS WITH UTILITY OWNER(S) AS NECESSARY.

7. SEE RESURFACING TRANSITION DETAIL FOR ALL ROADWAY TRANSITIONS TO EXISTING PAVEMENT. (SEE SHEET 36). ALL CONSTRUCTION SHALL BE CONSISTENT WITH TOWN OF LONGBOAT KEY AND MANATEE COUNTY, WHERE APPLICABLE.

8. SEE PLAN AND PROFILES, AND CROSS SECTIONS FOR ROAD REPAIRS TO BE MADE PRIOR TO RESURFACING.

9. CLIP/REMOVE ANY TURF OVERGROWTH FROM EXISTING PAVEMENT SURFACE.

10. CONSTRUCT CONCRETE DRIVEWAYS AND DRIVEWAY PAVED APRONS IN ACCORDANCE WITH TOWN OF LONGBOAT KEY AND MANATEE COUNTY STANDARDS. (SEE SHEET 36)

11. THE CONTRACTOR SHALL BE RESPONSIBLE FOR REMOVAL AND REINSTALLATION OF EXISTING TRAFFIC SIGNS AND MAILBOXES AS NECESSARY.

12. TRAFFIC SIGNS AND MAILBOXES DAMAGED BY THE CONTRACTOR SHALL BE REPAIRED OR REPLACED AT CONTRACTOR'S EXPENSE.

13. ALL PAVEMENT MARKINGS PER FDOT INDEX 17346 AND THE MUTCD, WHERE APPLICABLE.

14. ON ALL SURFACES SUBSEQUENT TO THE FINAL PAVEMENT SURFACE, INSTALL PAINTED NO-PASSING ZONE (DOUBLE-YELLOW CENTERLINE) PAVEMENT MARKINGS. ALSO INSTALL PAINTED STOP LINES, STOP MESSAGES, CROSSWALKS, AND SCHOOL ZONE MARKINGS WHERE SHOWN ON THE PLAN SHEETS. NO RPM'S. QUANTITIES FOR THESE MARKINGS ARE INCLUDED IN THE PAY ITEMS FOR PAINTED PAVEMENT MARKINGS.

15. ON THE FINAL PAVEMENT SURFACE OF THE PRIMARY ROADWAY, INSTALL PAINTED CENTERLINE PAVEMENT MARKINGS AND RPM'S AS SHOWN ON THE PLAN SHEETS. ALSO INSTALL PAINTED STOP LINES, STOP MESSAGES, CROSSWALKS, AND SCHOOL ZONE MARKINGS WHERE SHOWN ON THE PLAN SHEETS. INSTALL THERMOPLASTIC MARKINGS OVER THE PAINTED MARKINGS A MINIMUM OF 15 DAYS LATER, UNLESS OTHERWISE APPROVED BY THE ENGINEER.

16. ALL REFLECTIVE PAVEMENT MARKERS (RPM) PER FDOT INDEX 17352.

17. PAVEMENT MARKINGS SHALL BE INSTALLED PER THE "SIGNING AND PAVEMENT MARKING PLANS" (SHEETS 44-46)

18. ALL VIBRATORY ROLLER COMPACTION EQUIPMENT UTILIZED SHALL BE OPERATED IN STATIC MODE ONLY.

DELEGATED DESIGN NOTES

1. DELEGATED ENGINEER:
   A. DEFINITION – A FLORIDA PROFESSIONAL ENGINEER WHO UNDERTAKES A SPECIALTY SERVICE AND PROVIDES SERVICES OR CREATIVE WORK (DELEGATED ENGINEERING DOCUMENT) REGARDING A PORTION OF THE ENGINEERING PROJECT. THE DELEGATED ENGINEER IS THE ENGINEER OF RECORD FOR THAT PORTION OF THE ENGINEERING PROJECT.
   B. SHALL BE: (1) AN INDEPENDENT CONSULTANT, (2) AN EMPLOYEE OR OFFICER OF AN ENTITY SUPPLYING COMPONENTS TO A FABRICATOR OR CONTRACTOR, SO LONG AS THE ENGINEER ACTS AS AN INDEPENDENT CONSULTANT OR THROUGH A DULY QUALIFIED ENGINEERING CORPORATION, OR (3) AN EMPLOYEE OR OFFICER OF A FABRICATOR OR CONTRACTOR, SO LONG AS THE ENGINEER ACTS AS AN INDEPENDENT CONSULTANT OR THROUGH A DULY QUALIFIED ENGINEERING CORPORATION.

2. SUBMITTALS FOR CUSTOM DESIGNED, MANUFACTURED OR FABRICATED LOAD-CARRYING ITEMS AND CUSTOM FABRICATED ITEMS WHICH ARE REQUIRED BY CODES OR STANDARDS TO RESIST FORCES AND STRESSES, INCLUDING THEIR CONNECTIONS, ANCHORAGES AND ATTACHMENTS REQUIRE A DELEGATED ENGINEER.

3. AS A MINIMUM, THE FOLLOWING SYSTEMS AND COMPONENTS REQUIRE FABRICATION AND ERECTION DRAWINGS WITH INPUT BY A DELEGATED ENGINEER:
   A. OUTFALL PIPE PENETRATION THROUGH SEAWALL
   B. TEMPORARY SEAWALL SHORING
   C. TIEBACK AND DEADMAN REPLACEMENT, IF REQUIRED

4. FOR EACH CATEGORY OF SUBMITTALS REQUIRING INPUT FROM A DELEGATED ENGINEER, THE CONTRACTOR SHALL ATTACH TO THE FIRST SUBMITTAL A SIGNED AND SEALED LETTER FROM THE RESPONSIBLE DELEGATED ENGINEER STATING "I CERTIFY THAT THE DESIGN AND DRAFTING OF THE SHOP DRAWINGS WHICH ARE SIGNED AND SEALED BY ME WERE PREPARED UNDER MY DIRECT SUPERVISION AND CONTROL, AND TO THE BEST OF MY KNOWLEDGE, THE SHOP DRAWINGS COMPLY WITH THE APPLICABLE MINIMUM BUILDING CODES AND THE CONTRACT DOCUMENTS."

5. SUBMITTALS SHALL CLEARLY IDENTIFY THE SPECIFIC PROJECT AND APPLICABLE CODES, LIST THE DESIGN CRITERIA, AND SHOW ALL DETAILS AND PLANS NECESSARY FOR PROPER FABRICATION AND INSTALLATION. CALCULATIONS AND SHOP DRAWINGS SHALL IDENTIFY SPECIFIC PRODUCTS UTILIZED. GENERIC PRODUCTS WILL NOT BE ACCEPTED.

6. SHOP DRAWINGS AND CALCULATIONS REQUIRE THE IMPRESSED SEAL, DATE AND SIGNATURE OF THE DELEGATED ENGINEER. COMPUTER PRINTOUTS ARE AN ACCEPTABLE SUBSTITUTE FOR MANUAL COMPUTATIONS PROVIDED THEY ARE ACCOMPANIED BY SUFFICIENT DESCRIPTIVE INFORMATION TO PERMIT THEIR PROPER EVALUATION. SUCH DESCRIPTIVE INFORMATION SHALL BEAR THE IMPRESSED SEAL AND SIGNATURE OF THE DELEGATED ENGINEER AS AN INDICATION THAT HE HAS ACCEPTED RESPONSIBILITY FOR THE RESULTS. IF ACCOMPANYING SIGNED AND SEALED DESIGN PRINTS ARE PROVIDED, THE ENGINEER WILL RETAIN 2 SIGNED AND SEALED DESIGN PRINTS FOR HIS RECORDS.

7. CALCULATIONS ARE THE SOLE RESPONSIBILITY OF THE DELEGATED ENGINEER. CALCULATIONS ARE SUBMITTED TO THE ENGINEER FOR THEIR RECORDS.

8. STANDARDIZED PRODUCTS (I.E., CUT SHEETS) DO NOT REQUIRE THE SEAL OF A DELEGATED ENGINEER.

9. REVIEW BY THE PROJECT ENGINEER OF RECORD OF SUBMITTALS IS LIMITED TO VERIFYING THE FOLLOWING:
   A. THAT THE SPECIFIED STRUCTURAL SUBMITTALS HAVE BEEN FURNISHED.
   B. THAT THE STRUCTURAL SUBMITTALS HAVE BEEN SIGNED AND SEALED BY THE DELEGATED ENGINEER.
   C. THAT THE DELEGATED ENGINEER HAS UNDERSTOOD THE DESIGN INTENT AND HAS USED THE SPECIFIED STRUCTURAL CRITERIA. (NO DETAILED CHECK OF DIMENSIONS OR QUANTITIES WILL BE MADE.)

10. SUBMITTALS NOT MEETING THE ABOVE CRITERIA, OR SUBMITTED AFTER FABRICATION, WILL NOT BE REVIEWED.

NO.	DATE:	REVISION

INFRASTRUCTURE SOLUTION SERVICES
An HR Green Company
7319 Merchant Court
Sarasota, FL 34240
Phone: (941) 526-0813
FBPE CA# 29992

TOWN OF LONGBOAT KEY
PUBLIC WORKS DEPARTMENT
600 GENERAL HARRIS STREET
LONGBOAT KEY, FL 34228
PHONE (941) 316-1988

SLEEPY LAGOON
GENERAL HARRIS, PENFIELD, MARBURY

DRAWING TITLE: **GENERAL NOTES**

PROJ. MGR.:	DRWN. BY:	CHKD. BY:	PROJECT NO.:
DMB	WSH	MWM	LBK003
SCALE: N.T.S.	DATE: 05/15/2026		SHEET NO.: 3 OF 56

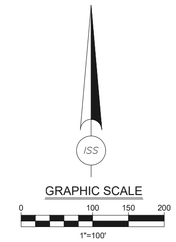

SURVEYOR'S NOTES

1. THIS IS A SPECIAL PURPOSE SURVEY AS DEFINED IN CHAPTER 5J-17, FLORIDA ADMINISTRATIVE CODE. SAID SURVEY MEETS THE "STANDARDS OF PRACTICE" FOR SURVEYING AND MAPPING, AS SET FORTH BY THE FLORIDA BOARD OF PROFESSIONAL SURVEYORS AND MAPPERS IN CHAPTER 5J-17, FLORIDA ADMINISTRATIVE CODE, PURSUANT TO SECTION 472.027, FLORIDA STATUTES. THE PURPOSE OF THIS SURVEY IS TO PROVIDE TOPOGRAPHIC DATA FOR THE CITY OF LONGBOAT KEY PROPOSED STORMWATER IMPROVEMENTS.
2. ALL PLATTED PROPERTY LINES, RIGHT OF WAY LINES AND EASEMENTS SHOWN ARE APPROXIMATE. THIS IS NOT A BOUNDARY SURVEY
3. THE HORIZONTAL VALUES OF THE DATA PRESENTED IN THE SURVEY WERE ESTABLISHED USING THE FDOT FPRN IN STATE PLANE FLORIDA WEST COORDINATES UTILIZING THE "RTCM_3 VRS MAX SOLUTION AND CHECKED TO NATIONAL GEODETIC SURVEY HORIZONTAL CONTROL POINT DESIGNATED "GIS 106 (PID AG9211)
4. THE VERTICAL VALUES OF THE DATA PRESENTED IN THE SURVEY WERE ESTABLISHED USING THE NATIONAL GEODETIC SURVEY BENCHMARK DESIGNATED "V 689" (PID DL1839), A BRASS SURVEY DISK ON A CONCRETE MONUMENT STAMPED V 689 2008 WHICH HAS AN ASSIGNED ELEVATION OF 3.10 FEET IN THE NORTH AMERICAN VERTICAL DATUM 1988 (N.A.V.D. 88) AS DETERMINED BY DIFFERENTIAL LEVELING BY THE NATIONAL GEODETIC SURVEY IN 2009.
5. THIS SURVEY IS NOT VALID WITHOUT THE SEAL AND SIGNATURE AND/OR DIGITAL SEAL AND SIGNATURE OF A FLORIDA
6. ADDITIONS OR DELETIONS TO THIS SURVEY MAP OR REPORT BY OTHER THAN THE SIGNING PARTY OR PARTIES IS PROHIBITED WITHOUT THE WRITTEN CONSENT OF THE SIGNING PARTY OR PARTIES.
7. LAST DAY OF FIELD WORK FOR TOPOGRAPHY AND IMPROVEMENTS LOCATIONS WAS 06/25/2025.
8. THIS SURVEY WAS PERFORMED UTILIZING G.P.S.-R.T.K. PROCEDURES AND TRADITIONAL SURVEY PROCEDURES WITH REDUNDANT MEASUREMENTS AND HAS A HORIZONTAL AND VERTICAL POSITION TOLERANCE OF 0.10 FEET.

BENCHMARK TABLE

BENCHMARK NO. AND DESCRIPTION	NORTHING	EASTING	ELEVATION
BM #1 MAG NAIL AND DISK	1124831.46	437230.48	3.22'
BM #2 MAG NAIL AND DISK	1124854.85	437894.65	1.96'
BM #3 MAG NAIL AND DISK	1124858.80	438285.63	1.73'
BM #4 MAG NAIL AND DISK	1125450.75	438572.46	1.83'
BM #5 MAG NAIL AND DISK	1126006.97	438842.56	1.92'
BM #6 MAG NAIL AND DISK	1125580.68	438272.25	2.20'
BM #7 MAG NAIL AND DISK	1126336.64	438649.48	2.88'

NO.	DATE:	REVISION

10/8/2026 3:23:18 PM

INFRASTRUCTURE SOLUTION SERVICES
An HR Green Company

7319 Merchant Court
Sarasota, FL 34240
Phone: (941) 526-0813
FBPE CA# 29992

TOWN OF LONGBOAT KEY
PUBLIC WORKS DEPARTMENT
600 GENERAL HARRIS STREET
LONGBOAT KEY, FL 34228
PHONE (941) 316-1988

SLEEPY LAGOON
GENERAL HARRIS, PENFIELD, MARBURY

DRAWING TITLE: **BASELINE CONTROL PLAN**

PROJ. MGR.:	DRWN. BY:	CHKD. BY:	PROJECT NO.:
DMB	WSH	MWM	LBK003
SCALE: 1" = 100'	DATE: 05/15/2026		SHEET NO.: 4 OF 56

Z:\Projects\Sarasota Region\Longboat Key, Town of\LBK003 - 2504561 - Sleepy Lagoon Gen Harris, Penfield, Marbury\Drawings\ISS DWG\2 Eng\Final Dwg\LBK003 - 3 - BCP_LAYOUT.dwg

NO.	DATE:	REVISION

10/8/2026 3:40:20 PM

INFRASTRUCTURE SOLUTION SERVICES
An HR Green Company

7319 Merchant Court
Sarasota, FL 34240
Phone: (941) 526-0813
FBPE CA# 29992

TOWN OF LONGBOAT KEY
PUBLIC WORKS DEPARTMENT
600 GENERAL HARRIS STREET
LONGBOAT KEY, FL 34228
PHONE (941) 316-1988

SLEEPY LAGOON
GENERAL HARRIS, PENFIELD, MARBURY

DRAWING TITLE: **PROJECT LAYOUT**

PROJ. MGR.:	DRWN. BY:	CHKD. BY:	PROJECT NO.:
DMB	WSH	MWM	LBK003

SCALE:	DATE:	SHEET NO.:
1" = 100'	05/15/2026	5 OF 56

Z:\Projects\Sarasota Region\Longboat Key, Town of\LBK003 - 2504561 - Sleepy Lagoon Gen Harris, Penfield, Marbury\Drawings\ISS DWG\2 Eng\Final Dwg\LBK003 - 3 - BCP_LAYOUT.dwg

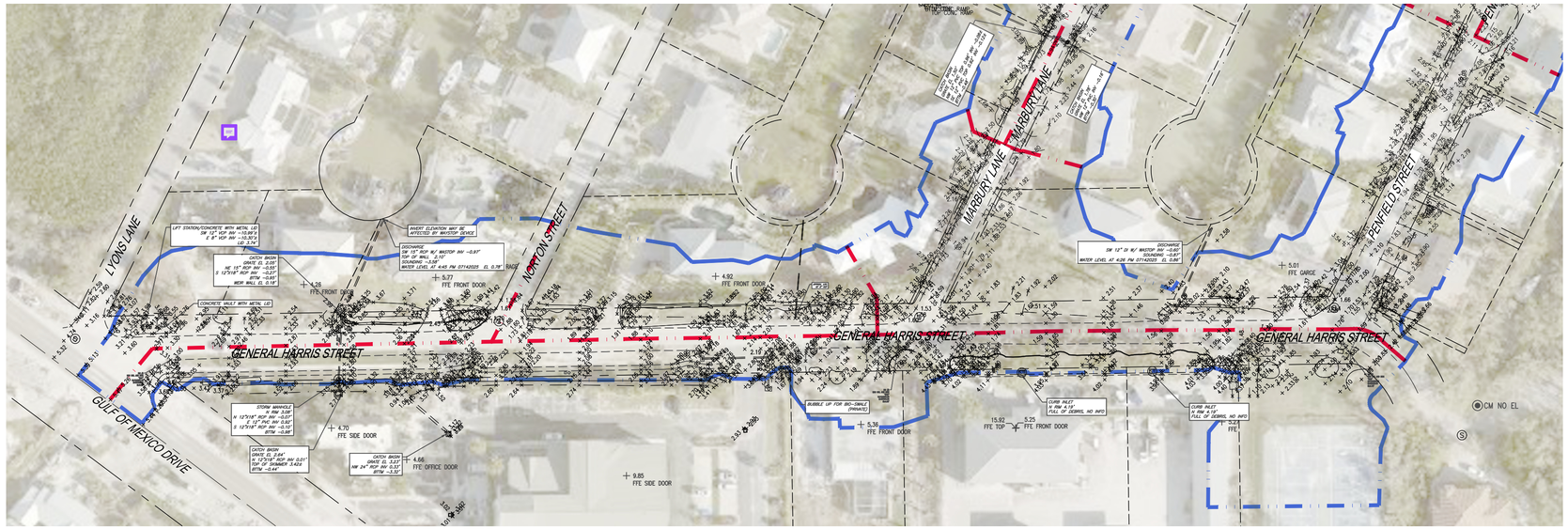

GRAPHIC SCALE
0 60 90 120
1"=60'

LEGEND

- EXISTING BASIN LINE
- EXISTING SUBBASIN LINE

NO.	DATE:	REVISION

INFRASTRUCTURE SOLUTION SERVICES
An HR Green Company

7319 Merchant Court
Sarasota, FL 34240
Phone: (941) 526-0813
FBPE CA# 29992

TOWN OF LONGBOAT KEY
PUBLIC WORKS DEPARTMENT
600 GENERAL HARRIS STREET
LONGBOAT KEY, FL 34228
PHONE (941) 316-1988

SLEEPY LAGOON
GENERAL HARRIS, PENFIELD, MARBURY

DRAWING TITLE: **EXISTING DRAINAGE MAP**

PROJ. MGR.:	DRWN. BY:	CHKD. BY:	PROJECT NO.:
DMB	WSH	MWM	LBK003
SCALE: 1" = 60'	DATE: 05/15/2026		SHEET NO.: 6 OF 56

10/8/2026 3:22:49 PM

Z:\Projects\Sarasota Region\Longboat Key, Town of\LBK003 – 2504561 – Sleepy Lagoon Gen Harris, Penfield, Marbury\Drawings\ISS DWG\2 Eng\Final Dwg\LBK003 – 4 – EXIST_DRAIN_MAP.dwg

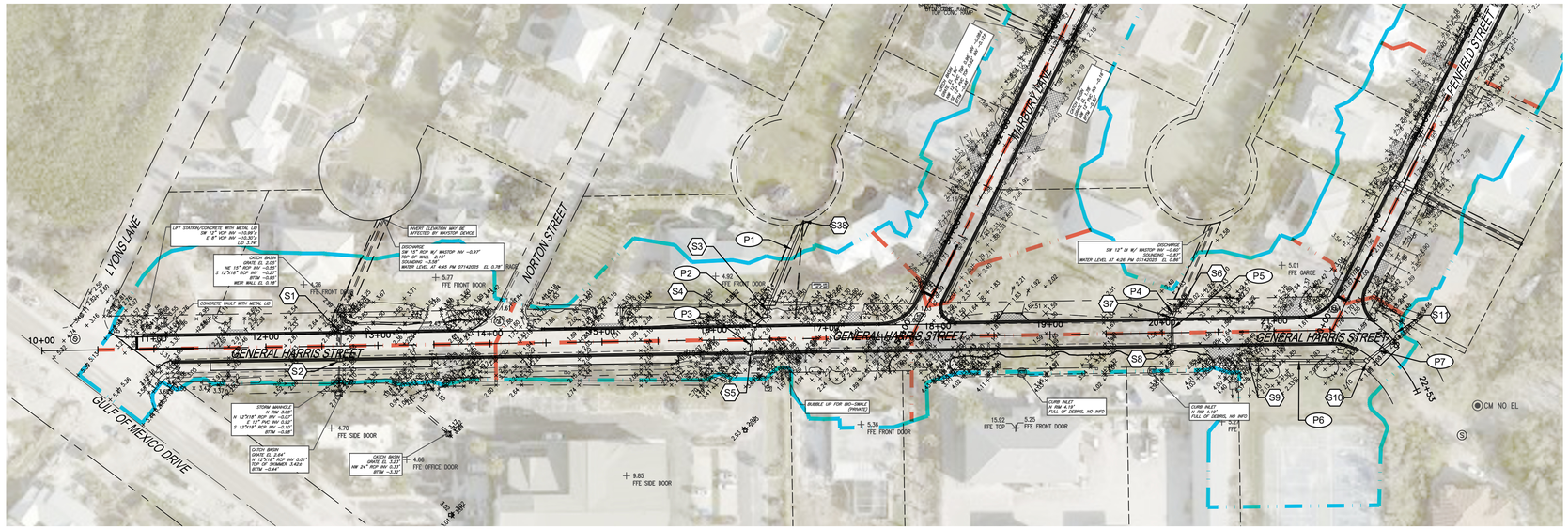

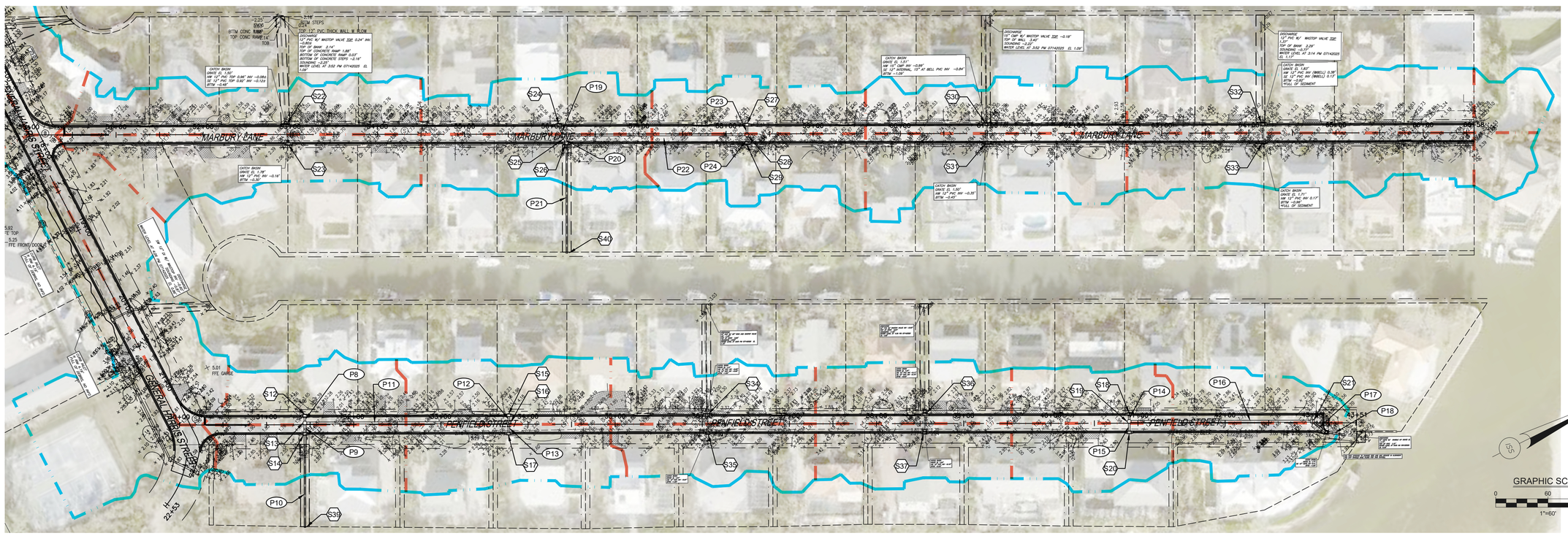

GRAPHIC SCALE

0 60 90 120

1"=60'

LEGEND

- PROPOSED BASIN LINE
- PROPOSED SUBBASIN LINE

NO.	DATE:	REVISION

INFRASTRUCTURE SOLUTION SERVICES

An HR Green Company

7319 Merchant Court
Sarasota, FL 34240
Phone: (941) 526-0813
FBPE CA# 29992

TOWN OF LONGBOAT KEY
PUBLIC WORKS DEPARTMENT
600 GENERAL HARRIS STREET
LONGBOAT KEY, FL 34228
PHONE (941) 316-1988

SLEEPY LAGOON
GENERAL HARRIS, PENFIELD, MARBURY

DRAWING TITLE: **PROPOSED DRAINAGE MAP**

PROJ. MGR.:	DRWN. BY:	CHKD. BY:	PROJECT NO.:
DMB	WSH	MWM	LBK003
SCALE: 1" = 60'	DATE: 05/15/2026		SHEET NO.: 7 OF 56

10/8/2026 3:18:45 PM

Z:\Projects\Sarasota Region\Longboat Key, Town of\LBK003 - 2504561 - Sleepy Lagoon Gen Harris, Penfield, Marbury\Drawings\ISS DWG\2 Eng\Final Dwg\LBK003 - 4 -PROP_DRAIN_MAP.dwg

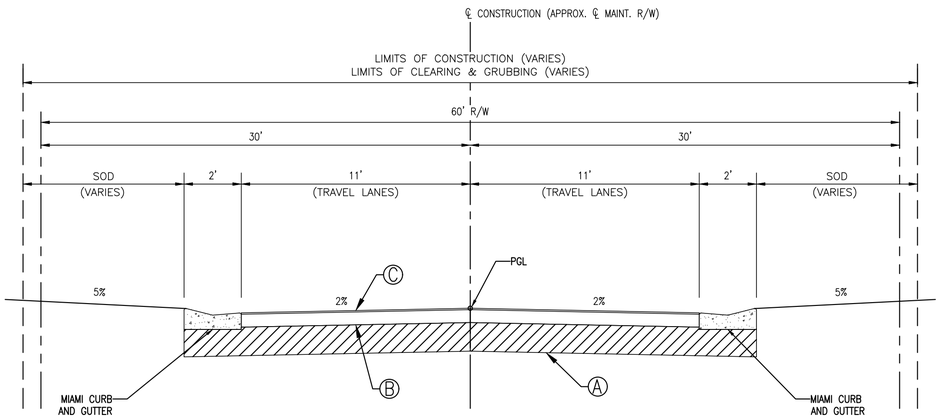

TYPICAL SECTION

GENERAL HARRIS STREET
STA. 10+00 TO STA. 22+53

DESIGN SPEED: 25 MPH
POSTED SPEED: 20 MPH

TRAVEL LANES

(A) 12" TYPE "B" STABILIZATION (LBR-40)

(B) OPTIONAL BASE GROUP 4 (6" MINIMUM, LBR 100 MINIMUM)

(C) TYPE SP-12.5 STRUCTURAL COURSE (TRAFFIC B, PG 76-22) (1 1/2")

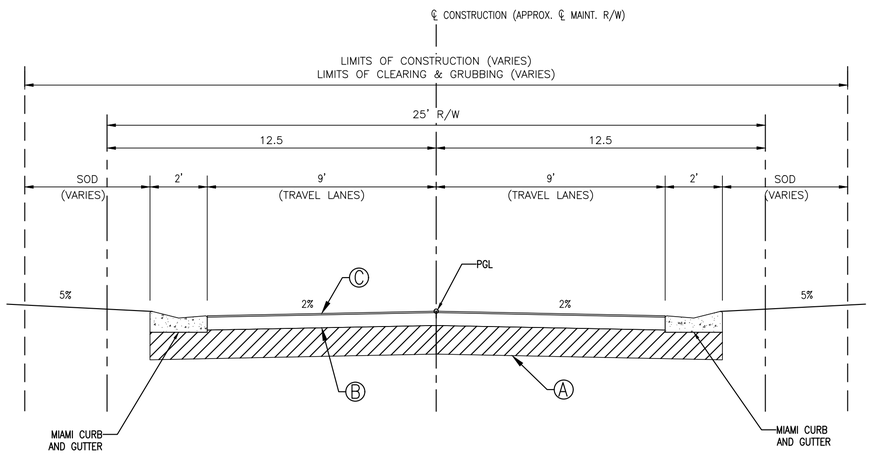

TYPICAL SECTION

MARBURY LANE
STA. 50+00 TO STA. 66+58

DESIGN SPEED: 25 MPH
POSTED SPEED: 20 MPH

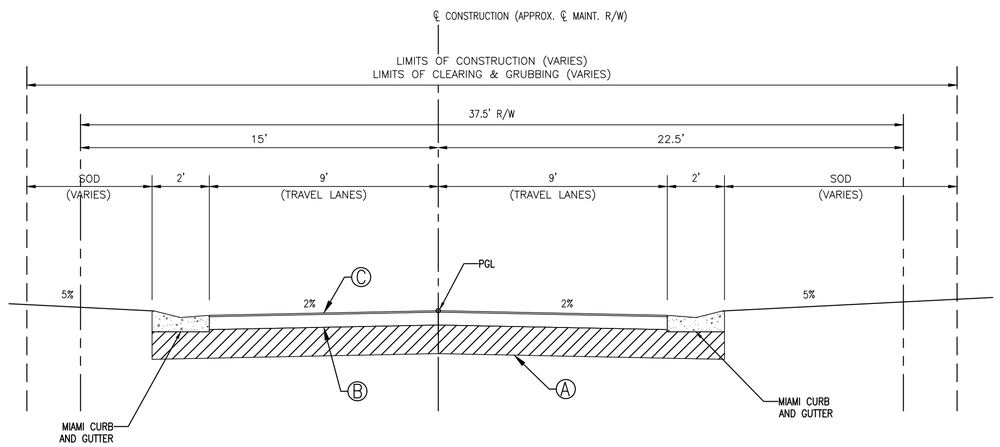

TYPICAL SECTION

PENFIELD STREET
STA. 30+00 TO STA. 43+51

DESIGN SPEED: 25 MPH
POSTED SPEED: 20 MPH

NO.	DATE:	REVISION

INFRASTRUCTURE SOLUTION SERVICES
An HR Green Company

7319 Merchant Court
Sarasota, FL 34240
Phone: (941) 526-0813
FBPE CA# 29992

TOWN OF LONGBOAT KEY
PUBLIC WORKS DEPARTMENT
600 GENERAL HARRIS STREET
LONGBOAT KEY, FL 34228
PHONE (941) 316-1988

SLEEPY LAGOON
GENERAL HARRIS, PENFIELD, MARBURY

DRAWING TITLE: **TYPICAL SECTIONS**

PROJ. MGR.:	DRWN. BY:	CHKD. BY:	PROJECT NO.:
DMB	WSH	MWM	LBK003
SCALE: N.T.S.	DATE: 05/15/2026		SHEET NO.: 8 OF 56

10/6/2026 3:28:33 PM

Z:\Projects\Sarasota Region\Longboat Key, Town of\LBK003 - 2504561 - Sleepy Lagoon Gen Harris, Penfield, Marbury\Drawings\ISS DWG\2 Eng\Final Dwg\LBK003 - 5 - TYP_SECT.dwg

SUMMARY OF DRAINAGE STRUCTURES

QUANTITY	STR. NO.	STATION	SIDE	DESCRIPTION	BARRELS	STORM PIPE (LF) 12"	15"	18"	12'x18"	14'x23"	MANHOLE / JUNCTION BOX (<10')	GRATE INLET / DITCH BOTTOM INLET (<10')	VALLEY GUTTER INLET (<10')	YARD DRAIN (<10')	ENDWALL (SEAWALL)	REPLACE EXISTING STRUCTURE	IN-LINE CHECK VALVE	PIPE END GUARD	REMARKS
P	S-1	12+67	LT	GRATE INLET	1				EX.			1							
F																			
P	S-2	12+66	RT	GRATE INLET	1				EX.			1							
F																			
P	S-3	16+46	LT	GRATE INLET	1			91'				1					X		
F																			
P	S-4	16+36	LT	GRATE INLET	1			13'				1							
F																			
P	S-5	16+32	RT	GRATE INLET	1		26'					1							
F																			
P	S-6	20+13	LT	GRATE INLET	1	EX.						1					X		
F																			
P	S-7	20+09	LT	GRATE INLET	1				9'			1							
F																			
P	S-8	20+09	RT	GRATE INLET	1		25'					1							
F																			
P	S-9	20+77	RT	BUBBLER BOX	1														
F																			
P	S-10	21+97	RT	GRATE INLET	1				106'			1							
F																			
P	S-11	22+06	LT	GRATE INLET	1				35'			1							
F																			
P	S-12	31+44	LT	GRATE INLET	1				9'			1							
F																			
P	S-13	31+44	CL	JUNCTION BOX	1					13'	1								
F																			
P	S-14	31+44	RT	GRATE INLET	1			108'				1					X		
F																			
P	S-15	33+78	LT	GRATE INLET	1				9'			1							
F																			
P	S-16	33+78	CL	JUNCTION BOX	1					234'	1								
F																			
P	S-17	33+78	RT	GRATE INLET	1				13'			1							
F																			
P	S-18	40+90	LT	GRATE INLET	1				9'			1							
F																			
P	S-19	40+90	CL	JUNCTION BOX	1					211'	1								
F																			
P	S-20	40+90	RT	GRATE INLET	1				13'			1							
F																			
P	S-21	43+00	CL	JUNCTION BOX	1			43'			1								
F																			
P	S-22	52+95	LT	REPLACE GRATE INLET	1	EX.						1				X	X		
F																			
P	S-23	52+97	RT	REPLACE GRATE INLET	1	EX.						1				X			
F																			
P	S-24	56+08	LT	GRATE INLET	1				13'			1							
F																			
P	S-25	56+13	CL	JUNCTION BOX	1					11'	1								
F																			
P	S-26	56+17	RT	GRATE INLET	1			127'				1					X		
F																			
P	S-27	58+24	LT	GRATE INLET	1				12'			1							
F																			
P	S-28	58+24	CL	JUNCTION BOX	1					211'	1								
F																			
SHEET TOTALS – PLAN QUANTITY						0	51'	382'	228'	680'	6	21	0	0	0				
SHEET TOTALS – FINAL QUANTITY																			

NO.	DATE:	REVISION

INFRASTRUCTURE SOLUTION SERVICES
An HR Green Company
7319 Merchant Court
Sarasota, FL 34240
Phone: (941) 526-0813
FBPE CA# 29992

TOWN OF LONGBOAT KEY
PUBLIC WORKS DEPARTMENT
600 GENERAL HARRIS STREET
LONGBOAT KEY, FL 34228
PHONE (941) 316-1988

SLEEPY LAGOON
GENERAL HARRIS, PENFIELD, MARBURY

DRAWING TITLE: **SUMMARY OF DRAINAGE**

PROJ. MGR.:	DRWN. BY:	CHKD. BY:	PROJECT NO.:
DMB	WSH	MWM	LBK003

SCALE:	DATE:	SHEET NO.:
N.T.S.	05/15/2026	9 OF 56

10/8/2026 3:39:18 PM

Z:\Projects\Sarasota Region\Longboat Key, Town of\LBK003 – 2504561 – Sleepy Lagoon Gen Harris, Penfield, Marbury\Drawings\ISS DWG\2 Eng\Final Dwg\LBK003 – 6 – SUM_OF_DRAIN.dwg

SUMMARY OF DRAINAGE STRUCTURES

QUANTITY	STR. NO.	STATION	SIDE	DESCRIPTION	BARRELS	STORM PIPE (LF) 12"	15"	18"	12'x18"	14'x23"	MANHOLE / JUNCTION BOX (<10')	GRATE INLET / DITCH BOTTOM INLET (<10')	VALLEY GUTTER INLET (<10')	YARD DRAIN (<10')	ENDWALL (SEAWALL)	REPLACE EXISTING STRUCTURE	IN-LINE CHECK VALVE	PIPE END GUARD	REMARKS
P	S-29	58+24	RT	GRATE INLET	1				10'			1							
F																			
P	S-30	60+99	LT	REPLACE GRATE INLET	1		EX.					1				X	X		
F																			
P	S-31	60+99	RT	REPLACE GRATE INLET	1	EX.						1				X			
F																			
P	S-32	64+16	LT	REPLACE GRATE INLET	1	EX.						1				X	X		
F																			
P	S-33	64+16	RT	REPLACE GRATE INLET	1	EX.						1				X			
F																			
P	S-34	36+06	LT	REPLACE GRATE INLET	1		EX.					1				X	X		
F																			
P	S-35	36+06	RT	REPLACE GRATE INLET	1	EX.						1				X			
F																			
P	S-36	38+55	LT	REPLACE GRATE INLET	1	EX.						1				X	X		
F																			
P	S-37	38+55	RT	REPLACE GRATE INLET	1	EX.						1				X			
F																			
P	S-38	16+81	LT	SEAWALL PENETRATION	1										1			X	
F																			
P	S-39	31+44	RT	SEAWALL PENETRATION	1										1			X	
F																			
P	S-40	56+13	RT	SEAWALL PENETRATION	1										1			X	
F																			
P	EXIST.	12+70	LT	EXISTING INLET	1		EX.										X		
F																			
P	EXIST.	43+17	RT	EXISTING INLET	1			EX.									X		
F																			
SHEET TOTALS – PLAN QUANTITY						0	0	0	10'	0	0	9	0	0	3				
SHEET TOTALS – FINAL QUANTITY																			
PROJECT TOTALS – PLAN QUANTITY						0	51'	382'	238'	680'	6	30	0	0	3				
PROJECT TOTALS – FINAL QUANTITY																			

NO.	DATE:	REVISION

INFRASTRUCTURE SOLUTION SERVICES
An HR Green Company
7319 Merchant Court
Sarasota, FL 34240
Phone: (941) 526-0813
FBPE CA# 29992

TOWN OF LONGBOAT KEY
PUBLIC WORKS DEPARTMENT
600 GENERAL HARRIS STREET
LONGBOAT KEY, FL 34228
PHONE (941) 316-1988

SLEEPY LAGOON
GENERAL HARRIS, PENFIELD, MARBURY

DRAWING TITLE: **SUMMARY OF DRAINAGE**

PROJ. MGR.:	DRWN. BY:	CHKD. BY:	PROJECT NO.:
DMB	WSH	MWM	LBK003
SCALE: N.T.S.	DATE: 05/15/2026		SHEET NO.: 10 OF 56

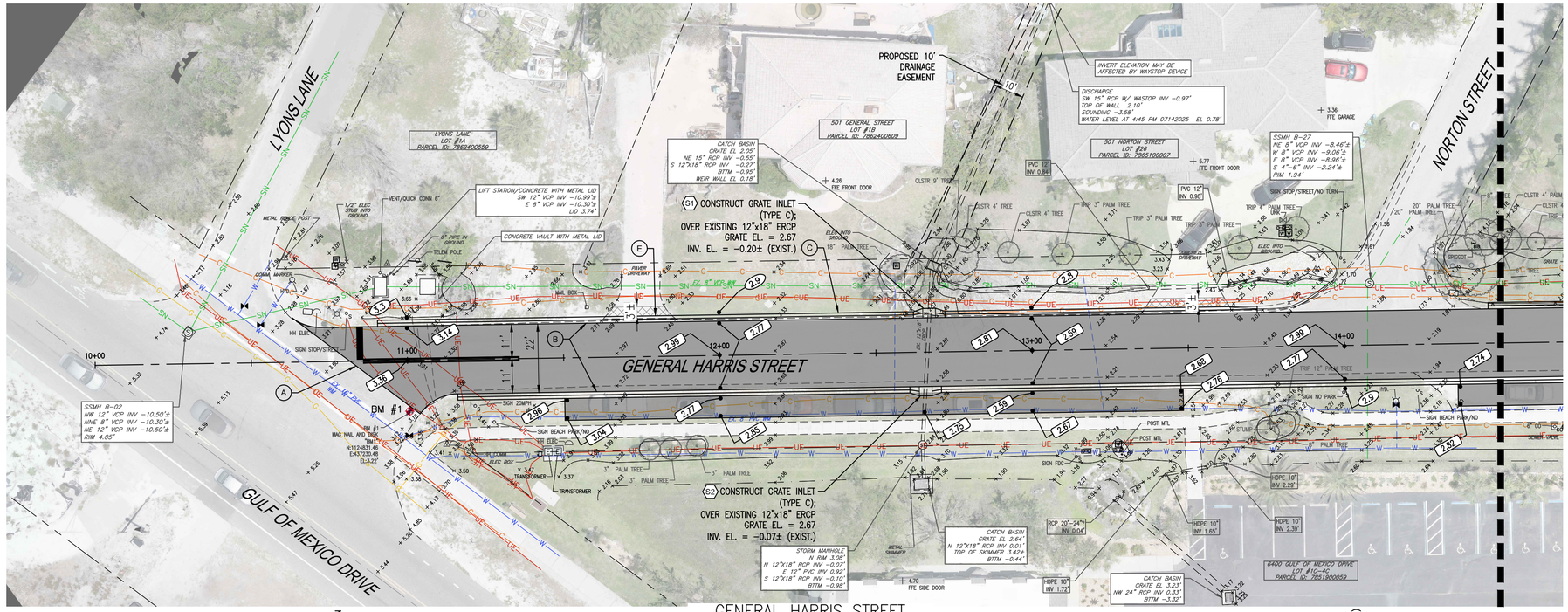

MATCH LINE – AT STATION 14+50 FOR CONTINUATION SEE SHEET 12

GENERAL HARRIS STREET

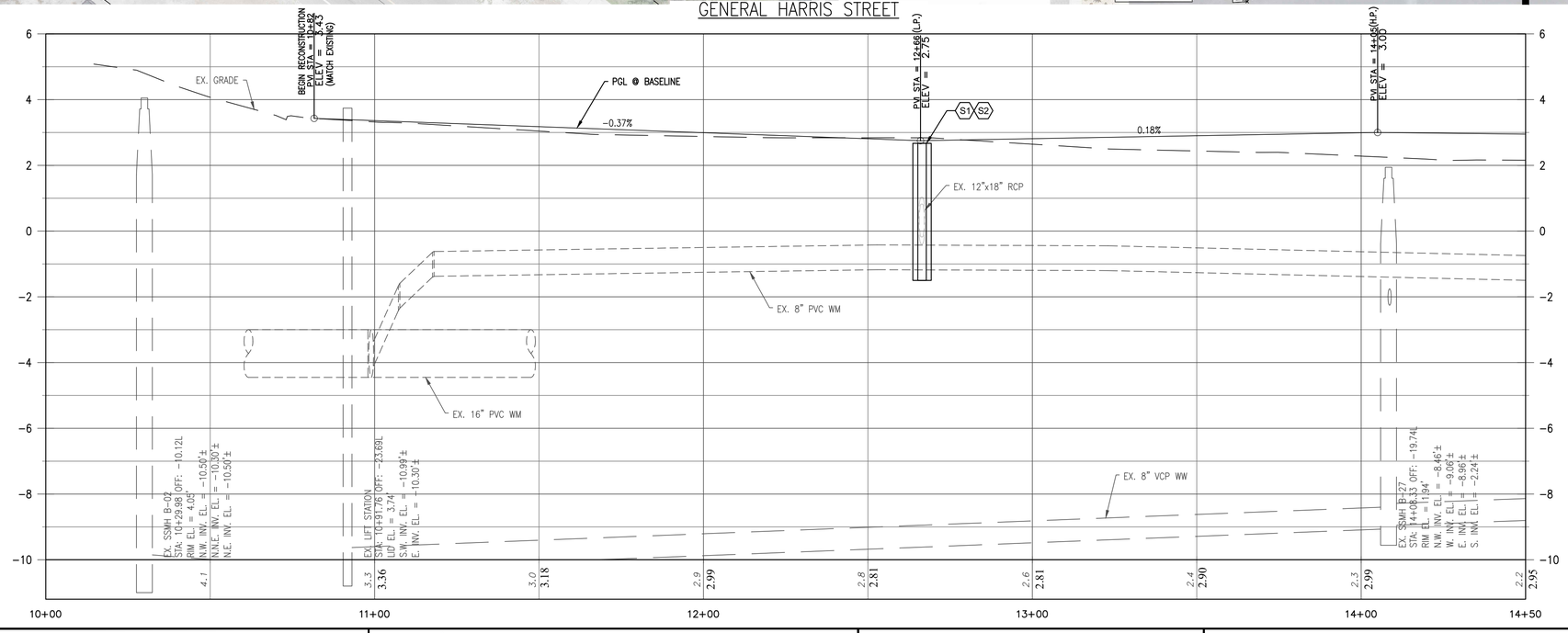

CONSTRUCTION KEYNOTES

- (A) CONSTRUCT SAW-CUT AND MATCH EXISTING PAVEMENT WITH SMOOTH TRANSITION
- (B) CONSTRUCT ROADWAY RECONSTRUCTION
- (C) CONSTRUCT MIAMI CURB AND GUTTER (3,000 PSI CONCRETE W/FIBER REINFORCEMENT)
- (D) CONSTRUCT 2' VALLEY GUTTER (3,000 PSI CONCRETE W/FIBER REINFORCEMENT)
- (E) CONSTRUCT DRIVEWAY APRON REPLACEMENT/RESTORATION (TYP.); MATERIAL TO MATCH EXISTING
- (F) PROPOSED APPROX. GRADING/RESTORATION LIMITS

LEGEND

- PROPOSED ASPHALT PAVEMENT
- PROPOSED DRIVEWAY RESTORATION
- EXISTING FACILITIES
- EXISTING RIGHT-OF-WAY LINE
- PROPOSED APPROX. GRADING/RESTORATION LIMITS
- EXISTING FIRE HYDRANT
- EXISTING SPOT ELEVATION
- EXISTING WATER MAIN/SERVICE
- EXISTING WASTEWATER MAIN/SERVICE
- EXISTING GAS LINE
- EXISTING COMMUNICATIONS LINE
- EXISTING ELECTRIC LINE
- PROPOSED STORM STRUCTURE AND STORM PIPE
- PROPOSED FINISHED GRADE (PAVED)
- PROPOSED FINISHED GRADE (UNPAVED)

GRAPHIC SCALE

HOR. 1"=20'

VER. 1"=2'

NO.	DATE:	REVISION

INFRASTRUCTURE SOLUTION SERVICES
An HR Green Company
7319 Merchant Court
Sarasota, FL 34240
Phone: (941) 526-0813
FBPE CA# 29992

TOWN OF LONGBOAT KEY
PUBLIC WORKS DEPARTMENT
600 GENERAL HARRIS STREET
LONGBOAT KEY, FL 34228
PHONE (941) 316-1988

SLEEPY LAGOON
GENERAL HARRIS, PENFIELD, MARBURY

DRAWING TITLE: **PLAN AND PROFILE (GENERAL HARRIS STREET)**

PROJ. MGR.:	DRWN. BY:	CHKD. BY:	PROJECT NO.:
DMB	WSH	MWM	LBK003
SCALE: 1" = 20'	DATE: 05/15/2026		SHEET NO.: 11 OF 56

10/8/2026 5:23:32 PM

Z:\Projects\Sarasota Region\Longboat Key, Town of\LBK003 – 2504561 – Sleepy Lagoon Gen Harris, Penfield, Marbury\Drawings\ISS DWG\2 Eng\Final Dwg\LBK003 – 7 – PLAN_PROF.dwg

MATCH LINE – SEE SHEET 24

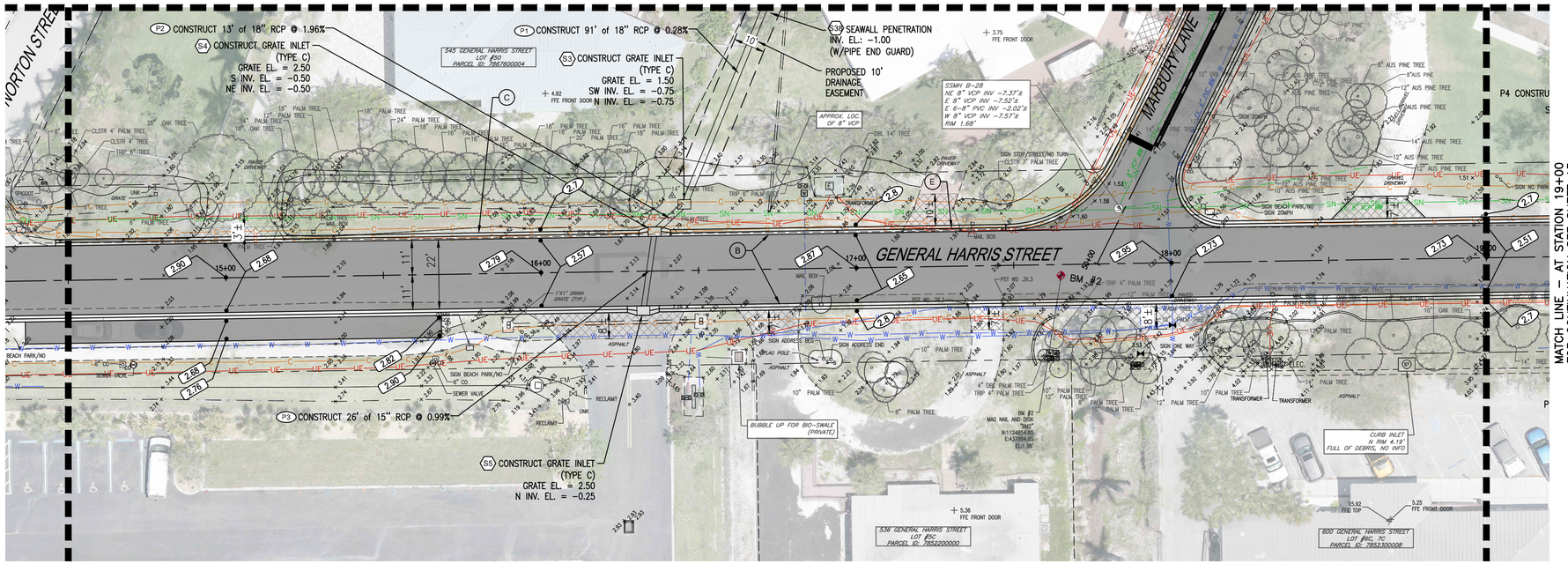

GENERAL HARRIS STREET

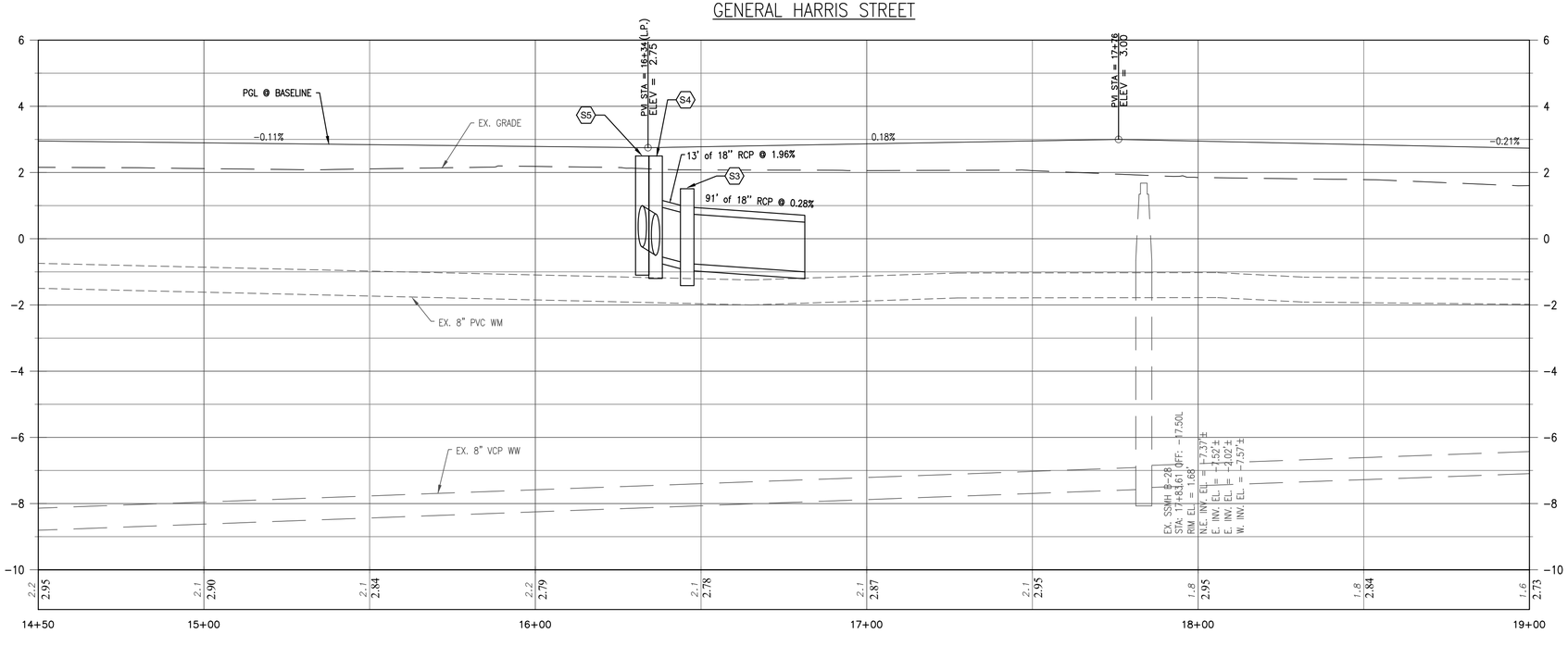

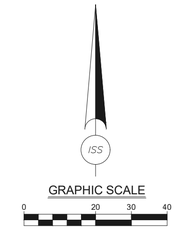

CONSTRUCTION KEYNOTES

- (A) CONSTRUCT SAW-CUT AND MATCH EXISTING PAVEMENT WITH SMOOTH TRANSITION
- (B) CONSTRUCT ROADWAY RECONSTRUCTION
- (C) CONSTRUCT MIAMI CURB AND GUTTER (3,000 PSI CONCRETE W/FIBER REINFORCEMENT)
- (D) CONSTRUCT 2' VALLEY GUTTER (3,000 PSI CONCRETE W/FIBER REINFORCEMENT)
- (E) CONSTRUCT DRIVEWAY APRON REPLACEMENT/RESTORATION (TYP.); MATERIAL TO MATCH EXISTING
- (F) PROPOSED APPROX. GRADING/RESTORATION LIMITS

LEGEND

- PROPOSED ASPHALT PAVEMENT
- PROPOSED DRIVEWAY RESTORATION
- EXISTING FACILITIES
- EXISTING RIGHT-OF-WAY LINE
- PROPOSED APPROX. GRADING/RESTORATION LIMITS
- EXISTING FIRE HYDRANT
- x 3.37 EXISTING SPOT ELEVATION
- W W EXISTING WATER MAIN/SERVICE
- SN SN EXISTING WASTEWATER MAIN/SERVICE
- G G EXISTING GAS LINE
- C C EXISTING COMMUNICATIONS LINE
- UE UE EXISTING ELECTRIC LINE
- PROPOSED STORM STRUCTURE AND STORM PIPE
- 24.15 PROPOSED FINISHED GRADE (PAVED)
- 23.1 PROPOSED FINISHED GRADE (UNPAVED)

GRAPHIC SCALE

HOR. 0 20 1"=20'

VER. 0 2 1"=2'

NO.	DATE:	REVISION

10/8/2026 5:28:28 PM

INFRASTRUCTURE SOLUTION SERVICES
An HR Green Company
7319 Merchant Court
Sarasota, FL 34240
Phone: (941) 526-0813
FBPE CA# 29992

TOWN OF LONGBOAT KEY
PUBLIC WORKS DEPARTMENT
600 GENERAL HARRIS STREET
LONGBOAT KEY, FL 34228
PHONE (941) 316-1988

SLEEPY LAGOON
GENERAL HARRIS, PENFIELD, MARBURY

DRAWING TITLE: **PLAN AND PROFILE (GENERAL HARRIS STREET)**

PROJ. MGR.:	DRWN. BY:	CHKD. BY:	PROJECT NO.:
DMB	WSH	MWM	LBK003
SCALE: 1" = 20'	DATE: 05/15/2026		SHEET NO.: 12 OF 56

Z:\Projects\Sarasota Region\Longboat Key, Town of\LBK003 – 2504561 – Sleepy Lagoon Gen Harris, Penfield, Marbury\Drawings\ISS DWG\2 Eng\Final Dwg\LBK003 – 7 – PLAN_PROF.dwg

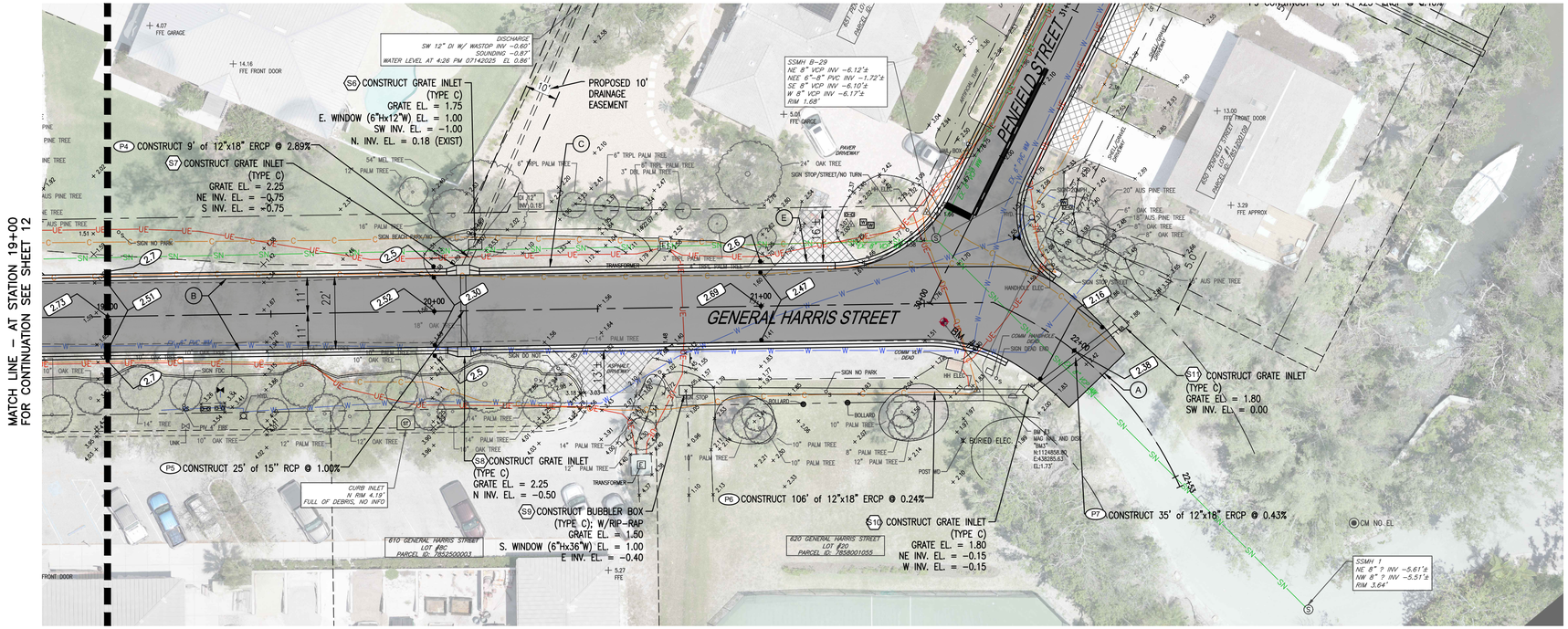

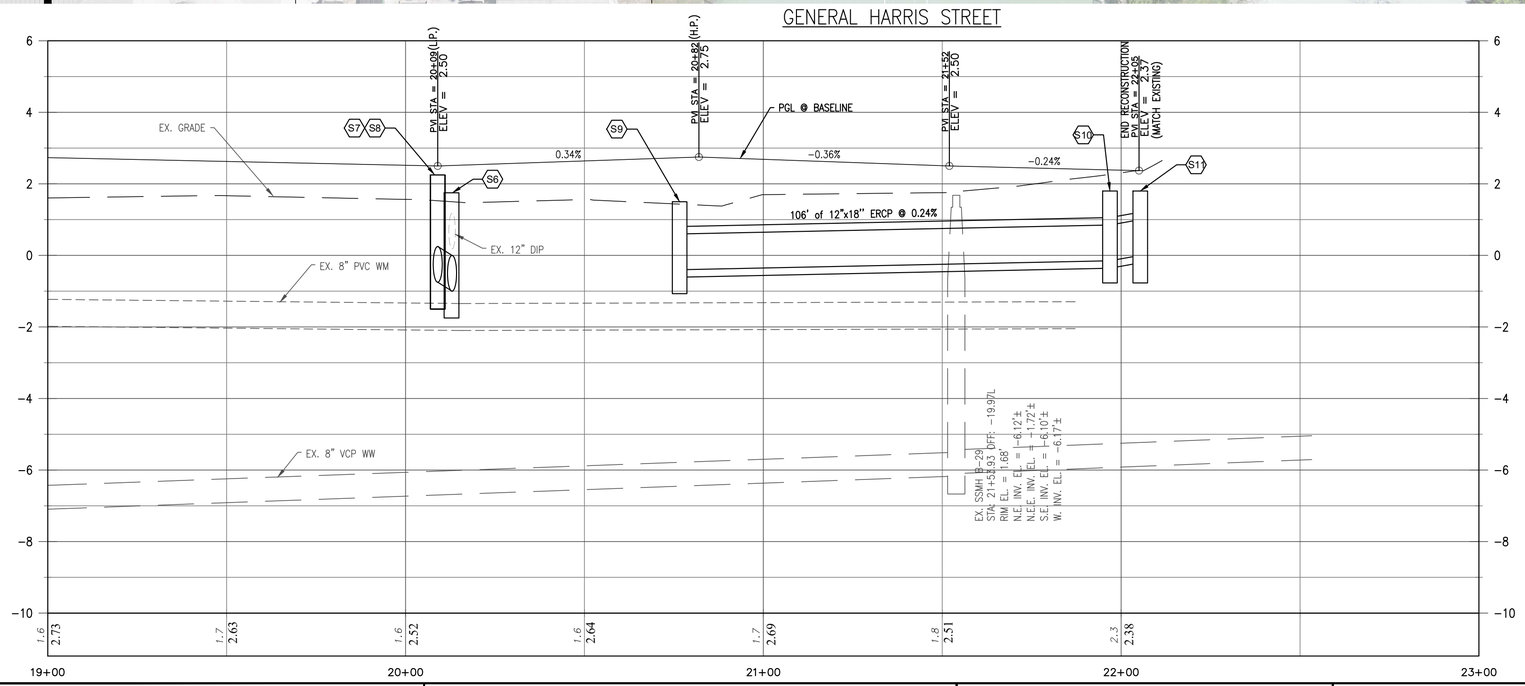

GRAPHIC SCALE
1"=20'

CONSTRUCTION KEYNOTES

- (A) CONSTRUCT SAW-CUT AND MATCH EXISTING PAVEMENT WITH SMOOTH TRANSITION
- (B) CONSTRUCT ROADWAY RECONSTRUCTION
- (C) CONSTRUCT MIAMI CURB AND GUTTER (3,000 PSI CONCRETE W/FIBER REINFORCEMENT)
- (D) CONSTRUCT 2' VALLEY GUTTER (3,000 PSI CONCRETE W/FIBER REINFORCEMENT)
- (E) CONSTRUCT DRIVEWAY APRON REPLACEMENT/RESTORATION (TYP.); MATERIAL TO MATCH EXISTING
- (F) PROPOSED APPROX. GRADING/RESTORATION LIMITS

LEGEND

- PROPOSED ASPHALT PAVEMENT
- PROPOSED DRIVEWAY RESTORATION
- EXISTING FACILITIES
- EXISTING RIGHT-OF-WAY LINE
- PROPOSED APPROX. GRADING/RESTORATION LIMITS
- EXISTING FIRE HYDRANT
- EXISTING SPOT ELEVATION
- EXISTING WATER MAIN/SERVICE
- EXISTING WASTEWATER MAIN/SERVICE
- EXISTING GAS LINE
- EXISTING COMMUNICATIONS LINE
- EXISTING ELECTRIC LINE
- PROPOSED STORM STRUCTURE AND STORM PIPE
- PROPOSED FINISHED GRADE (PAVED)
- PROPOSED FINISHED GRADE (UNPAVED)

GRAPHIC SCALE
HOR. 1"=20'
VER. 1"=2'

NO.	DATE:	REVISION

10/8/2026 5:27:04 PM

INFRASTRUCTURE SOLUTION SERVICES
An HR Green Company
7319 Merchant Court
Sarasota, FL 34240
Phone: (941) 526-0813
FBPE CA# 29992

TOWN OF LONGBOAT KEY
PUBLIC WORKS DEPARTMENT
600 GENERAL HARRIS STREET
LONGBOAT KEY, FL 34228
PHONE (941) 316-1988

SLEEPY LAGOON
GENERAL HARRIS, PENFIELD, MARBURY

DRAWING TITLE: **PLAN AND PROFILE (GENERAL HARRIS STREET)**

PROJ. MGR.:	DRWN. BY:	CHKD. BY:	PROJECT NO.:
DMB	WSH	MWM	LBK003
SCALE: 1" = 20'	DATE: 05/15/2026		SHEET NO.: 13 OF 56

Z:\Projects\Sarasota Region\Longboat Key, Town of\LBK003 – 2504561 – Sleepy Lagoon Gen Harris, Penfield, Marbury\Drawings\ISS DWG\2 Eng\Final Dwg\LBK003 – 7 – PLAN_PROF.dwg

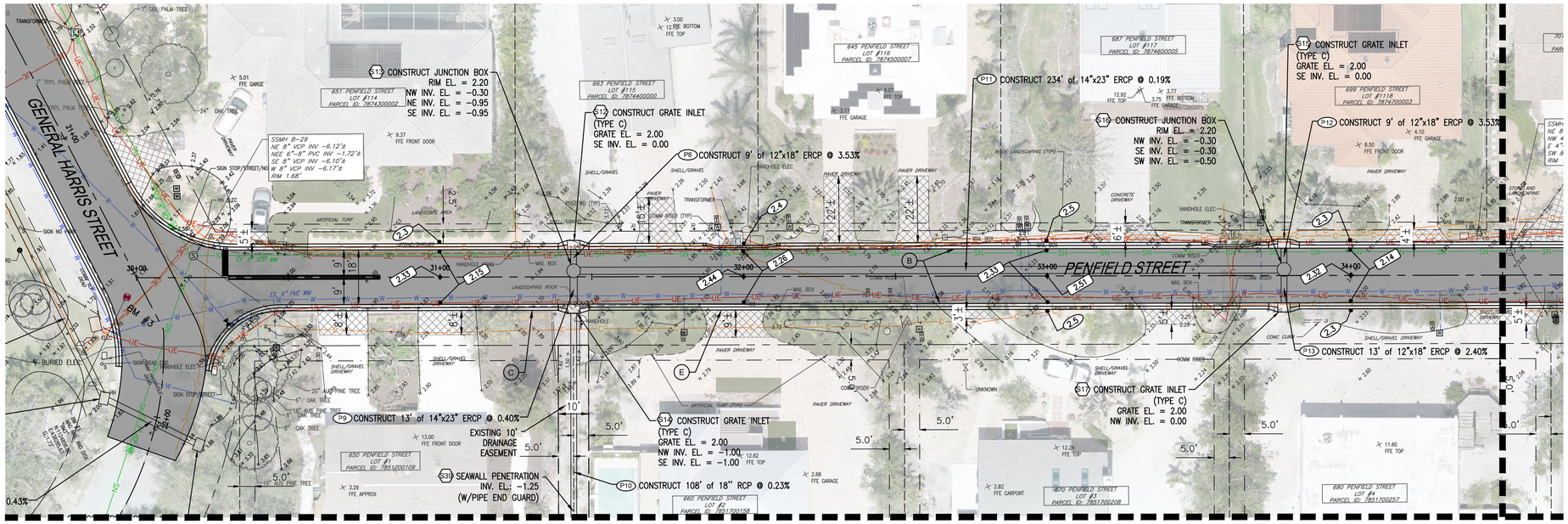

MATCH LINE – SEE SHEET 24

PENFIELD STREET

CONSTRUCTION KEYNOTES

- (A) CONSTRUCT SAW-CUT AND MATCH EXISTING PAVEMENT WITH SMOOTH TRANSITION
- (B) CONSTRUCT ROADWAY RECONSTRUCTION
- (C) CONSTRUCT MIAMI CURB AND GUTTER (3,000 PSI CONCRETE W/FIBER REINFORCEMENT)
- (D) CONSTRUCT 2' VALLEY GUTTER (3,000 PSI CONCRETE W/FIBER REINFORCEMENT)
- (E) CONSTRUCT DRIVEWAY APRON REPLACEMENT/RESTORATION (TYP.); MATERIAL TO MATCH EXISTING
- (F) PROPOSED APPROX. GRADING/RESTORATION LIMITS

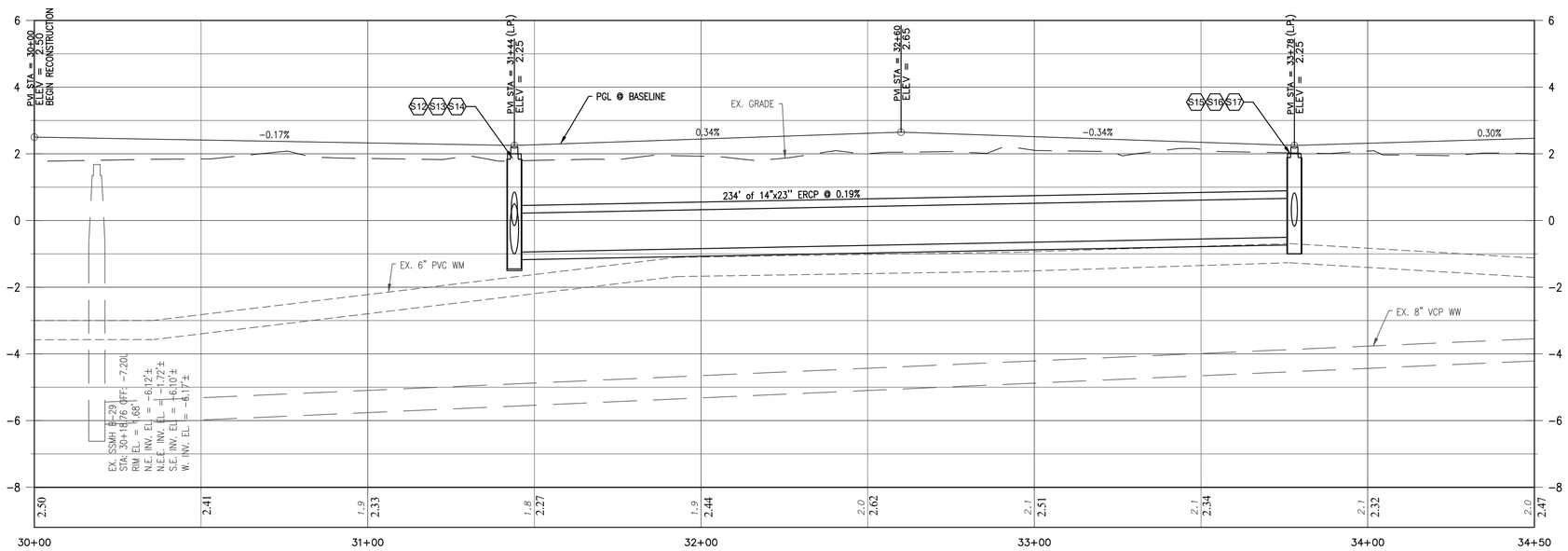

LEGEND

- PROPOSED ASPHALT PAVEMENT
- PROPOSED DRIVEWAY RESTORATION
- EXISTING FACILITIES
- EXISTING RIGHT-OF-WAY LINE
- PROPOSED APPROX. GRADING/RESTORATION LIMITS
- EXISTING FIRE HYDRANT
- EXISTING SPOT ELEVATION
- EXISTING WATER MAIN/SERVICE
- EXISTING WASTEWATER MAIN/SERVICE
- EXISTING GAS LINE
- EXISTING COMMUNICATIONS LINE
- EXISTING ELECTRIC LINE
- PROPOSED STORM STRUCTURE AND STORM PIPE
- PROPOSED FINISHED GRADE (PAVED)
- PROPOSED FINISHED GRADE (UNPAVED)

GRAPHIC SCALE
HOR. 1"=20'
VER. 1"=2'

NO.	DATE:	REVISION

INFRASTRUCTURE SOLUTION SERVICES
An HR Green Company

7319 Merchant Court
Sarasota, FL 34240
Phone: (941) 526-0813
FBPE CA# 29992

TOWN OF LONGBOAT KEY
PUBLIC WORKS DEPARTMENT
600 GENERAL HARRIS STREET
LONGBOAT KEY, FL 34228
PHONE (941) 316-1988

SLEEPY LAGOON
GENERAL HARRIS, PENFIELD, MARBURY

DRAWING TITLE: **PLAN AND PROFILE (PENFIELD STREET)**

PROJ. MGR.:	DRWN. BY:	CHKD. BY:	PROJECT NO.:
DMB	WSH	MWM	LBK003
SCALE: 1" = 20'	DATE: 05/15/2026		SHEET NO.: 14 OF 56

10/8/2025 5:25:44 PM

Z:\Projects\Sarasota Region\Longboat Key, Town of\LBK003 – 2504561 – Sleepy Lagoon Gen Harris, Penfield, Marbury\Drawings\ISS DWG\2 Eng\Final Dwg\LBK003 – 7 – PLAN_PROF.dwg

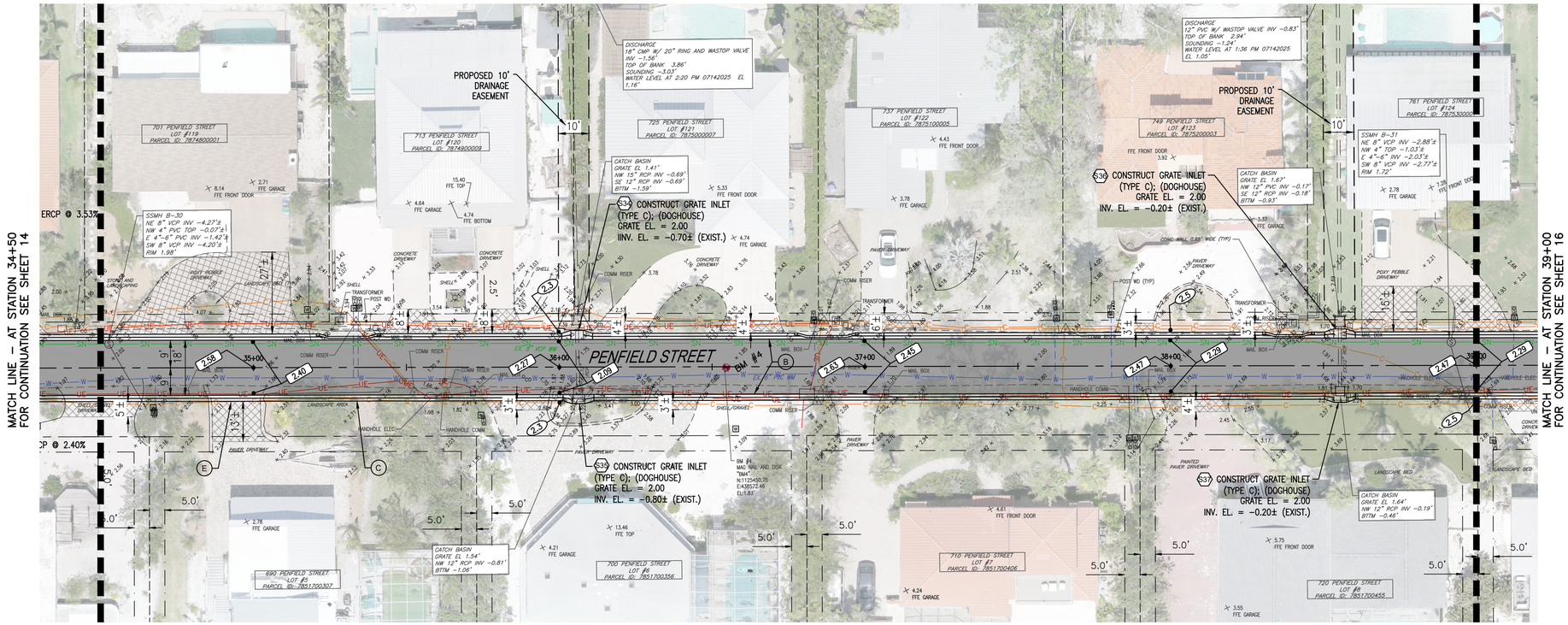

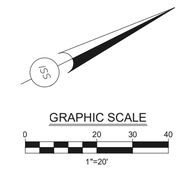

CONSTRUCTION KEYNOTES

- (A) CONSTRUCT SAW–CUT AND MATCH EXISTING PAVEMENT WITH SMOOTH TRANSITION
- (B) CONSTRUCT ROADWAY RECONSTRUCTION
- (C) CONSTRUCT MIAMI CURB AND GUTTER (3,000 PSI CONCRETE W/FIBER REINFORCEMENT)
- (D) CONSTRUCT 2' VALLEY GUTTER (3,000 PSI CONCRETE W/FIBER REINFORCEMENT)
- (E) CONSTRUCT DRIVEWAY APRON REPLACEMENT/RESTORATION (TYP.); MATERIAL TO MATCH EXISTING
- (F) PROPOSED APPROX. GRADING/RESTORATION LIMITS

PENFIELD STREET

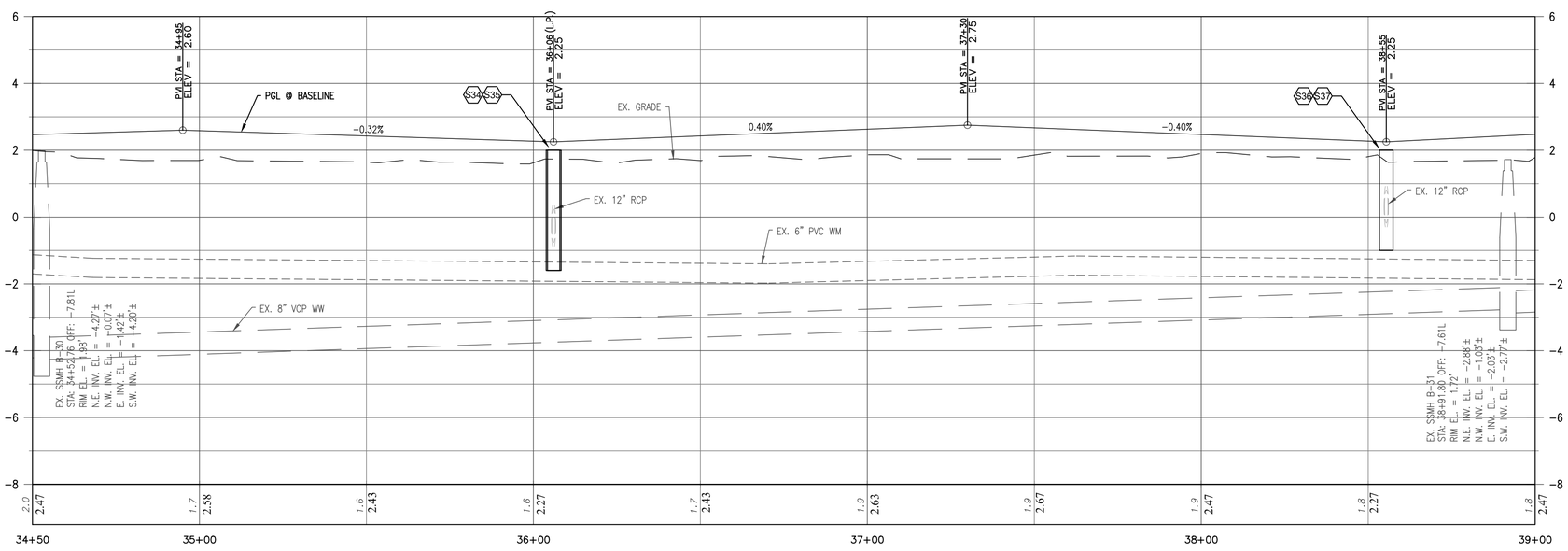

LEGEND

- PROPOSED ASPHALT PAVEMENT
- PROPOSED DRIVEWAY RESTORATION
- EXISTING FACILITIES
- EXISTING RIGHT–OF–WAY LINE
- PROPOSED APPROX. GRADING/RESTORATION LIMITS
- EXISTING FIRE HYDRANT
- EXISTING SPOT ELEVATION
- EXISTING WATER MAIN/SERVICE
- EXISTING WASTEWATER MAIN/SERVICE
- EXISTING GAS LINE
- EXISTING COMMUNICATIONS LINE
- EXISTING ELECTRIC LINE
- PROPOSED STORM STRUCTURE AND STORM PIPE
- PROPOSED FINISHED GRADE (PAVED)
- PROPOSED FINISHED GRADE (UNPAVED)

GRAPHIC SCALE
HOR. 0 20 1"=20'
VER. 0 2 1"=2'

NO.	DATE:	REVISION

INFRASTRUCTURE SOLUTION SERVICES
An HR Green Company
7319 Merchant Court
Sarasota, FL 34240
Phone: (941) 526-0813
FBPE CA# 29992

TOWN OF LONGBOAT KEY
PUBLIC WORKS DEPARTMENT
600 GENERAL HARRIS STREET
LONGBOAT KEY, FL 34228
PHONE (941) 316-1988

SLEEPY LAGOON
GENERAL HARRIS, PENFIELD, MARBURY

DRAWING TITLE: **PLAN AND PROFILE (PENFIELD STREET)**

PROJ. MGR.	DRWN. BY:	CHKD. BY:	PROJECT NO.:
DMB	WSH	MWM	LBK003
SCALE: 1" = 20'	DATE: 05/15/2026		SHEET NO.: 15 OF 56

10/8/2026 5:29:57 PM

Z:\Projects\Sarasota Region\Longboat Key, Town of\LBK003 – 2504561 – Sleepy Lagoon Gen Harris, Penfield, Marbury\Drawings\ISS DWG\2 Eng\Final Dwg\LBK003 – 7 – PLAN_PROF.dwg

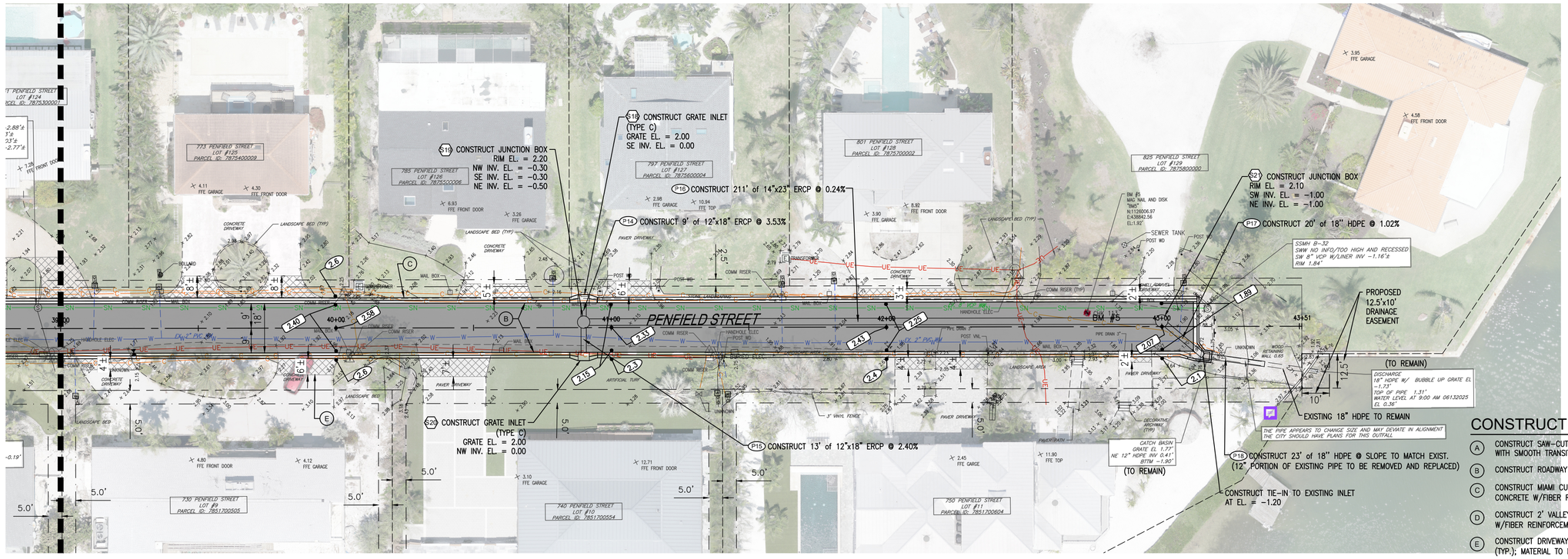

CONSTRUCTION KEYNOTES

- (A) CONSTRUCT SAW-CUT AND MATCH EXISTING PAVEMENT WITH SMOOTH TRANSITION
- (B) CONSTRUCT ROADWAY RECONSTRUCTION
- (C) CONSTRUCT MIAMI CURB AND GUTTER (3,000 PSI CONCRETE W/FIBER REINFORCEMENT)
- (D) CONSTRUCT 2' VALLEY GUTTER (3,000 PSI CONCRETE W/FIBER REINFORCEMENT)
- (E) CONSTRUCT DRIVEWAY APRON REPLACEMENT/RESTORATION (TYP.); MATERIAL TO MATCH EXISTING
- (F) PROPOSED APPROX. GRADING/RESTORATION LIMITS

PENFIELD STREET

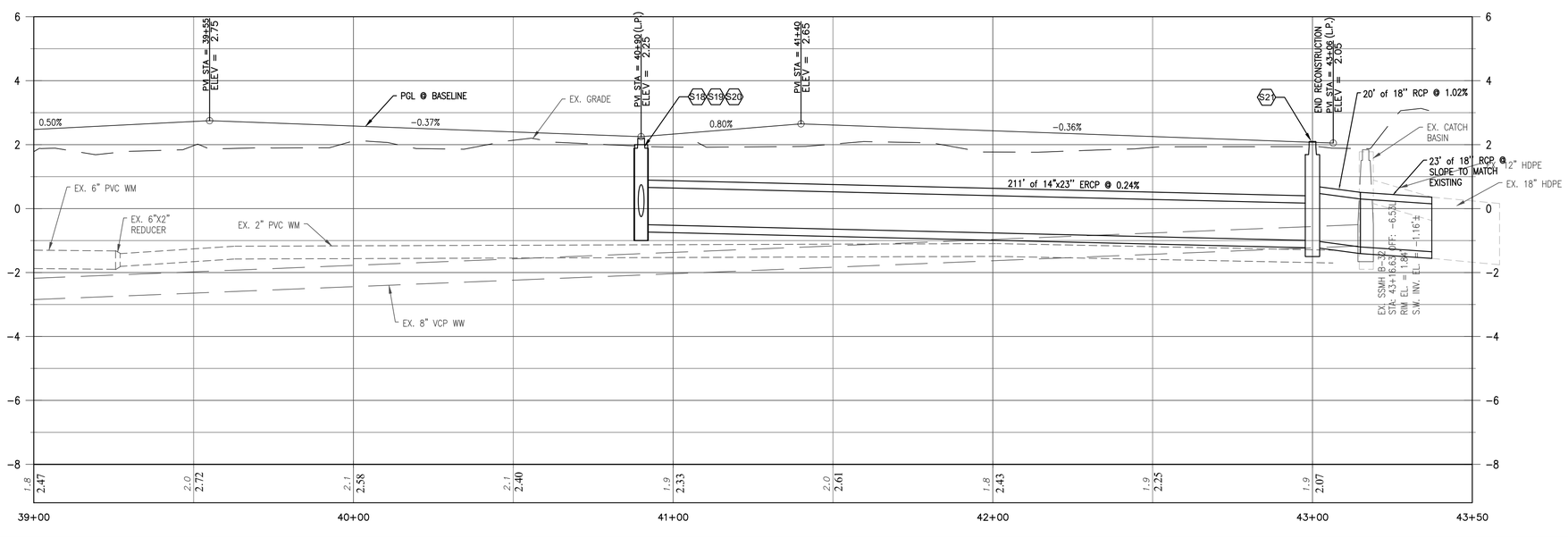

LEGEND

- PROPOSED ASPHALT PAVEMENT
- PROPOSED DRIVEWAY RESTORATION
- EXISTING FACILITIES
- EXISTING RIGHT-OF-WAY LINE
- PROPOSED APPROX. GRADING/RESTORATION LIMITS
- EXISTING FIRE HYDRANT
- EXISTING SPOT ELEVATION
- EXISTING WATER MAIN/SERVICE
- EXISTING WASTEWATER MAIN/SERVICE
- EXISTING GAS LINE
- EXISTING COMMUNICATIONS LINE
- EXISTING ELECTRIC LINE
- PROPOSED STORM STRUCTURE AND STORM PIPE
- PROPOSED FINISHED GRADE (PAVED)
- PROPOSED FINISHED GRADE (UNPAVED)

GRAPHIC SCALE
HOR. 1"=20'
VER. 1"=2'

NO.	DATE:	REVISION

INFRASTRUCTURE SOLUTION SERVICES
An HR Green Company
7319 Merchant Court
Sarasota, FL 34240
Phone: (941) 526-0813
FBPE CA# 29992

TOWN OF LONGBOAT KEY
PUBLIC WORKS DEPARTMENT
600 GENERAL HARRIS STREET
LONGBOAT KEY, FL 34228
PHONE (941) 316-1988

SLEEPY LAGOON
GENERAL HARRIS, PENFIELD, MARBURY

DRAWING TITLE: **PLAN AND PROFILE (PENFIELD STREET)**

PROJ. MGR.:	DRWN. BY:	CHKD. BY:	PROJECT NO.:
DMB	WSH	MWM	LBK003
SCALE: 1" = 20'	DATE: 05/15/2026		SHEET NO.: 16 OF 56

10/8/2026 5:25:00 PM

Z:\Projects\Sarasota Region\Longboat Key, Town of\LBK003 – 2504561 – Sleepy Lagoon Gen Harris, Penfield, Marbury\Drawings\ISS DWG\2 Eng\Final Dwg\LBK003 – 7 – PLAN_PROF.dwg

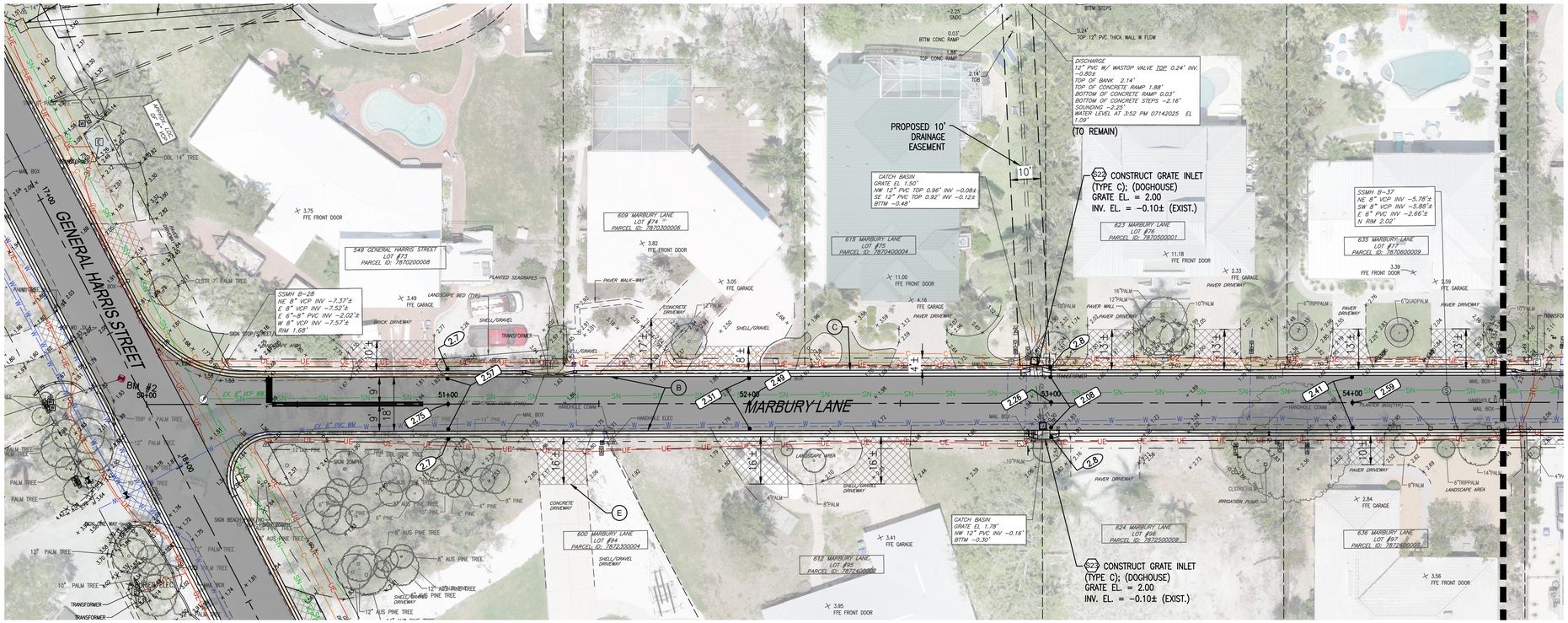

GRAPHIC SCALE
0 20 30 40
1"=20'

CONSTRUCTION KEYNOTES

- (A) CONSTRUCT SAW-CUT AND MATCH EXISTING PAVEMENT WITH SMOOTH TRANSITION
- (B) CONSTRUCT ROADWAY RECONSTRUCTION
- (C) CONSTRUCT MIAMI CURB AND GUTTER (3,000 PSI CONCRETE W/FIBER REINFORCEMENT)
- (D) CONSTRUCT 2' VALLEY GUTTER (3,000 PSI CONCRETE W/FIBER REINFORCEMENT)
- (E) CONSTRUCT DRIVEWAY APRON REPLACEMENT/RESTORATION (TYP.); MATERIAL TO MATCH EXISTING
- (F) PROPOSED APPROX. GRADING/RESTORATION LIMITS

MARBURY LANE

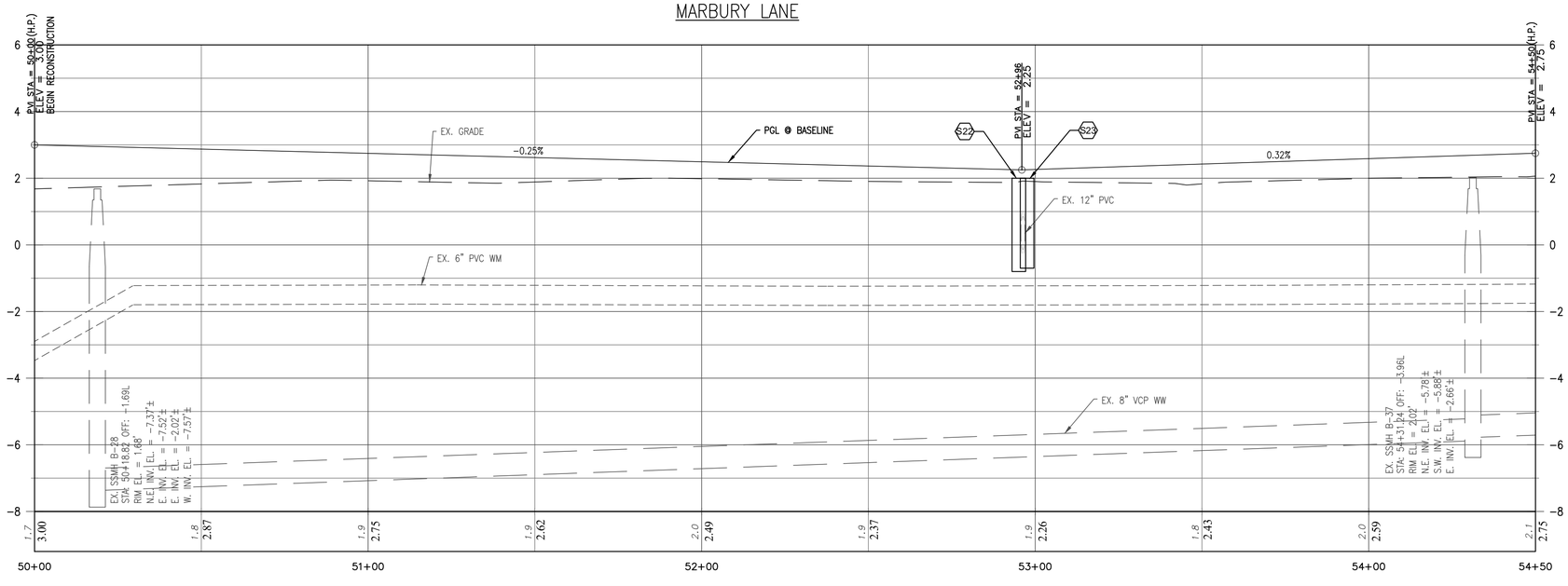

LEGEND

- PROPOSED ASPHALT PAVEMENT
- PROPOSED DRIVEWAY RESTORATION
- EXISTING FACILITIES
- EXISTING RIGHT-OF-WAY LINE
- PROPOSED APPROX. GRADING/RESTORATION LIMITS
- EXISTING FIRE HYDRANT
- EXISTING SPOT ELEVATION
- EXISTING WATER MAIN/SERVICE
- EXISTING WASTEWATER MAIN/SERVICE
- EXISTING GAS LINE
- EXISTING COMMUNICATIONS LINE
- EXISTING ELECTRIC LINE
- PROPOSED STORM STRUCTURE AND STORM PIPE
- PROPOSED FINISHED GRADE (PAVED)
- PROPOSED FINISHED GRADE (UNPAVED)

GRAPHIC SCALE
HOR. 0 20 1"=20'
VER. 0 2 1"=2'

NO.	DATE:	REVISION

INFRASTRUCTURE SOLUTION SERVICES
An HR Green Company

7319 Merchant Court
Sarasota, FL 34240
Phone: (941) 526-0813
FBPE CA# 29992

TOWN OF LONGBOAT KEY
PUBLIC WORKS DEPARTMENT
600 GENERAL HARRIS STREET
LONGBOAT KEY, FL 34228
PHONE (941) 316-1988

SLEEPY LAGOON
GENERAL HARRIS, PENFIELD, MARBURY

DRAWING TITLE: **PLAN AND PROFILE (MARBURY LANE)**

PROJ. MGR.:	DRWN. BY:	CHKD. BY:	PROJECT NO.:
DMB	WSH	MWM	LBK003
SCALE: 1" = 20'	DATE: 05/15/2026		SHEET NO.: 17 OF 56

10/8/2026 5:27:49 PM

Z:\Projects\Sarasota Region\Longboat Key, Town of\LBK003 - 2504561 - Sleepy Lagoon Gen Harris, Penfield, Marbury\Drawings\ISS DWG\2 Eng\Final Dwg\LBK003 - 7 - PLAN_PROF.dwg

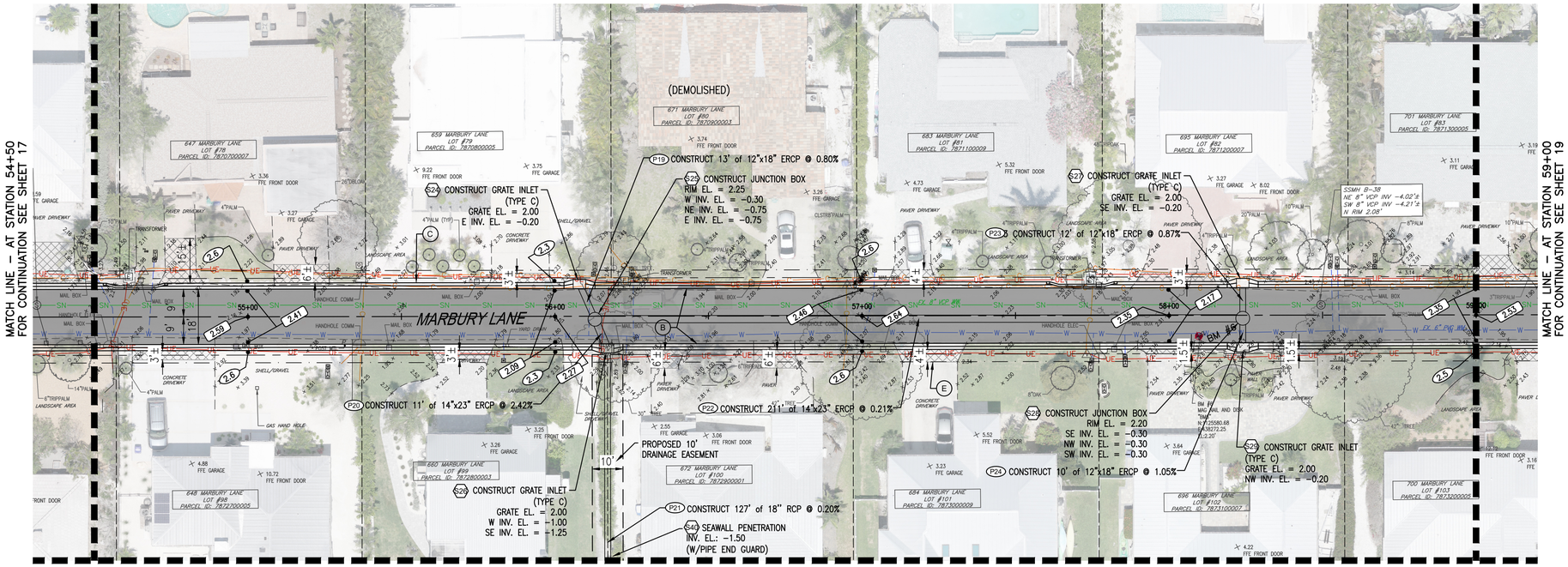

MARBURY LANE

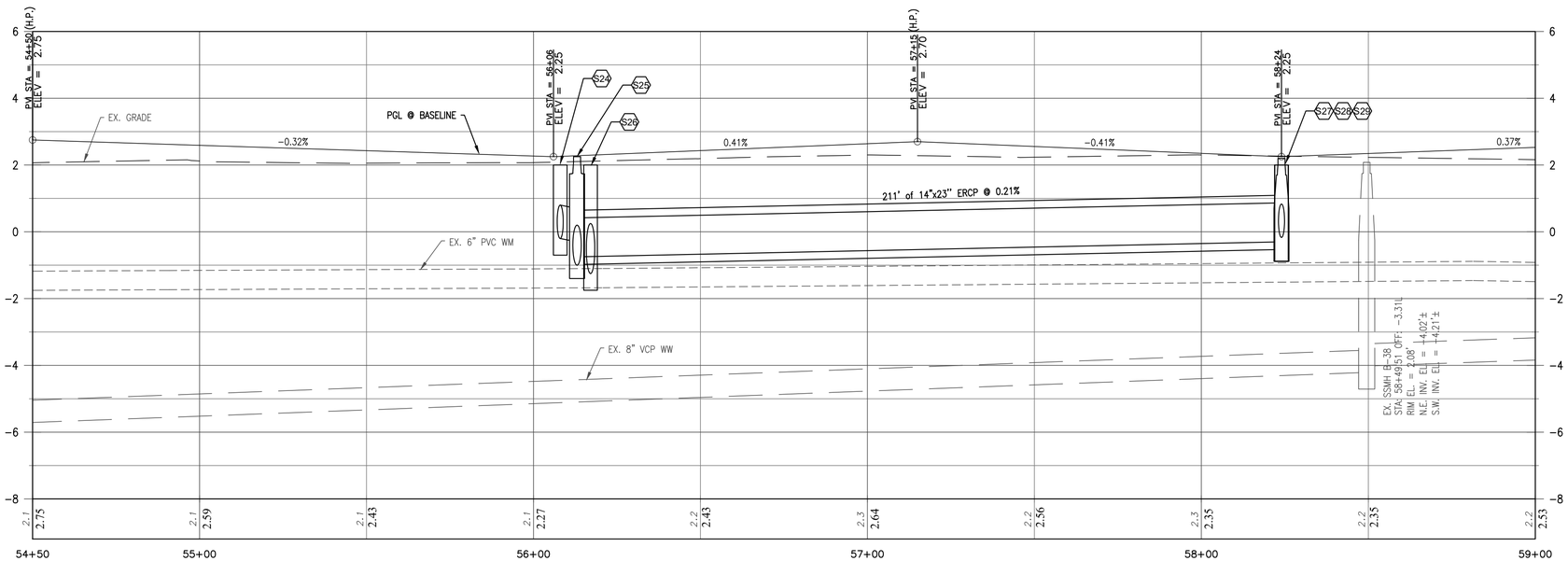

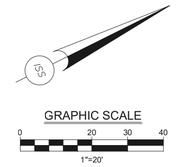

CONSTRUCTION KEYNOTES

- (A) CONSTRUCT SAW-CUT AND MATCH EXISTING PAVEMENT WITH SMOOTH TRANSITION
- (B) CONSTRUCT ROADWAY RECONSTRUCTION
- (C) CONSTRUCT MIAMI CURB AND GUTTER (3,000 PSI CONCRETE W/FIBER REINFORCEMENT)
- (D) CONSTRUCT 2' VALLEY GUTTER (3,000 PSI CONCRETE W/FIBER REINFORCEMENT)
- (E) CONSTRUCT DRIVEWAY APRON REPLACEMENT/RESTORATION (TYP.); MATERIAL TO MATCH EXISTING
- (F) PROPOSED APPROX. GRADING/RESTORATION LIMITS

LEGEND

- PROPOSED ASPHALT PAVEMENT
- PROPOSED DRIVEWAY RESTORATION
- EXISTING FACILITIES
- EXISTING RIGHT-OF-WAY LINE
- PROPOSED APPROX. GRADING/RESTORATION LIMITS
- EXISTING FIRE HYDRANT
- x 3.27 EXISTING SPOT ELEVATION
- W W EXISTING WATER MAIN/SERVICE
- SN SN EXISTING WASTEWATER MAIN/SERVICE
- G G EXISTING GAS LINE
- C C EXISTING COMMUNICATIONS LINE
- UE UE EXISTING ELECTRIC LINE
- PROPOSED STORM STRUCTURE AND STORM PIPE
- 24.15 PROPOSED FINISHED GRADE (PAVED)
- 25.1 PROPOSED FINISHED GRADE (UNPAVED)

GRAPHIC SCALE

HOR. 0 20 1"=20'

VER. 0 2 1"=2'

NO.	DATE:	REVISION

10/8/2025 5:26:22 PM

INFRASTRUCTURE SOLUTION SERVICES
An HR Green Company
7319 Merchant Court
Sarasota, FL 34240
Phone: (941) 526-0813
FBPE CA# 29992

TOWN OF LONGBOAT KEY
PUBLIC WORKS DEPARTMENT
600 GENERAL HARRIS STREET
LONGBOAT KEY, FL 34228
PHONE (941) 316-1988

SLEEPY LAGOON
GENERAL HARRIS, PENFIELD, MARBURY

DRAWING TITLE: **PLAN AND PROFILE (MARBURY LANE)**

PROJ. MGR.:	DRWN. BY:	CHKD. BY:	PROJECT NO.:
DMB	WSH	MWM	LBK003
SCALE: 1" = 20'	DATE: 05/15/2026		SHEET NO.: 18 OF 56

Z:\Projects\Sarasota Region\Longboat Key, Town of\LBK003 – 2504561 – Sleepy Lagoon Gen Harris, Penfield, Marbury\Drawings\ISS DWG\2 Eng\Final Dwg\LBK003 – 7 – PLAN_PROF.dwg

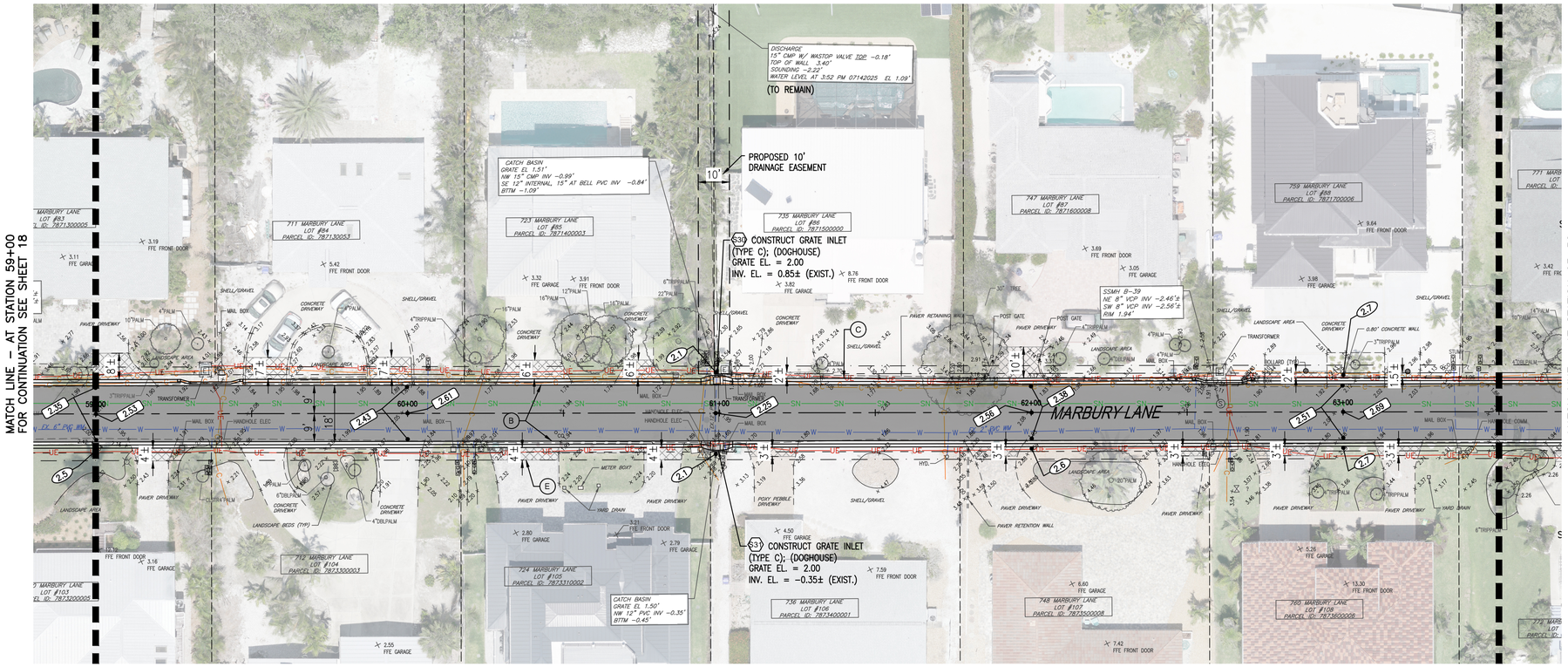

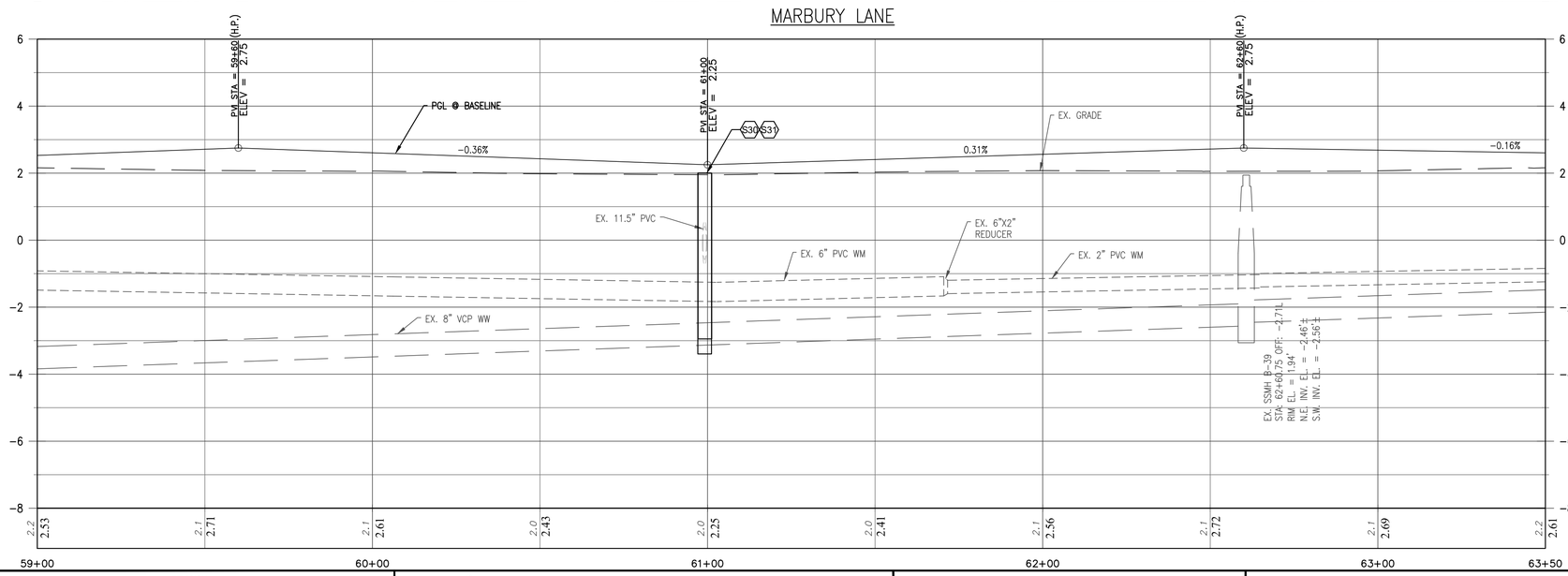

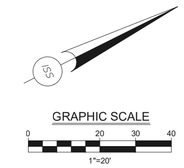

CONSTRUCTION KEYNOTES

- (A) CONSTRUCT SAW-CUT AND MATCH EXISTING PAVEMENT WITH SMOOTH TRANSITION
- (B) CONSTRUCT ROADWAY RECONSTRUCTION
- (C) CONSTRUCT MIAMI CURB AND GUTTER (3,000 PSI CONCRETE W/FIBER REINFORCEMENT)
- (D) CONSTRUCT 2' VALLEY GUTTER (3,000 PSI CONCRETE W/FIBER REINFORCEMENT)
- (E) CONSTRUCT DRIVEWAY APRON REPLACEMENT/RESTORATION (TYP.); MATERIAL TO MATCH EXISTING
- (F) PROPOSED APPROX. GRADING/RESTORATION LIMITS

LEGEND

- PROPOSED ASPHALT PAVEMENT
- PROPOSED DRIVEWAY RESTORATION
- EXISTING FACILITIES
- EXISTING RIGHT-OF-WAY LINE
- PROPOSED APPROX. GRADING/RESTORATION LIMITS
- EXISTING FIRE HYDRANT
- EXISTING SPOT ELEVATION
- EXISTING WATER MAIN/SERVICE
- EXISTING WASTEWATER MAIN/SERVICE
- EXISTING GAS LINE
- EXISTING COMMUNICATIONS LINE
- EXISTING ELECTRIC LINE
- PROPOSED STORM STRUCTURE AND STORM PIPE
- PROPOSED FINISHED GRADE (PAVED)
- PROPOSED FINISHED GRADE (UNPAVED)

GRAPHIC SCALE
HOR. 0 20 1"=20'
VER. 0 2 1"=2'

NO.	DATE:	REVISION

INFRASTRUCTURE SOLUTION SERVICES
An HR Green Company
7319 Merchant Court
Sarasota, FL 34240
Phone: (941) 526-0813
FBPE CA# 29992

TOWN OF LONGBOAT KEY
PUBLIC WORKS DEPARTMENT
600 GENERAL HARRIS STREET
LONGBOAT KEY, FL 34228
PHONE (941) 316-1988

SLEEPY LAGOON
GENERAL HARRIS, PENFIELD, MARBURY

DRAWING TITLE: **PLAN AND PROFILE (MARBURY LANE)**

PROJ. MGR.	DRWN. BY:	CHKD. BY:	PROJECT NO.:
DMB	WSH	MWM	LBK003
SCALE: 1" = 20'	DATE: 05/15/2026		SHEET NO.: 19 OF 56

10/8/2025 5:29:13 PM

Z:\Projects\Sarasota Region\Longboat Key, Town of\LBK003 – 2504561 – Sleepy Lagoon Gen Harris, Penfield, Marbury\Drawings\ISS DWG\2 Eng\Final Dwg\LBK003 – 7 – PLAN_PROF.dwg

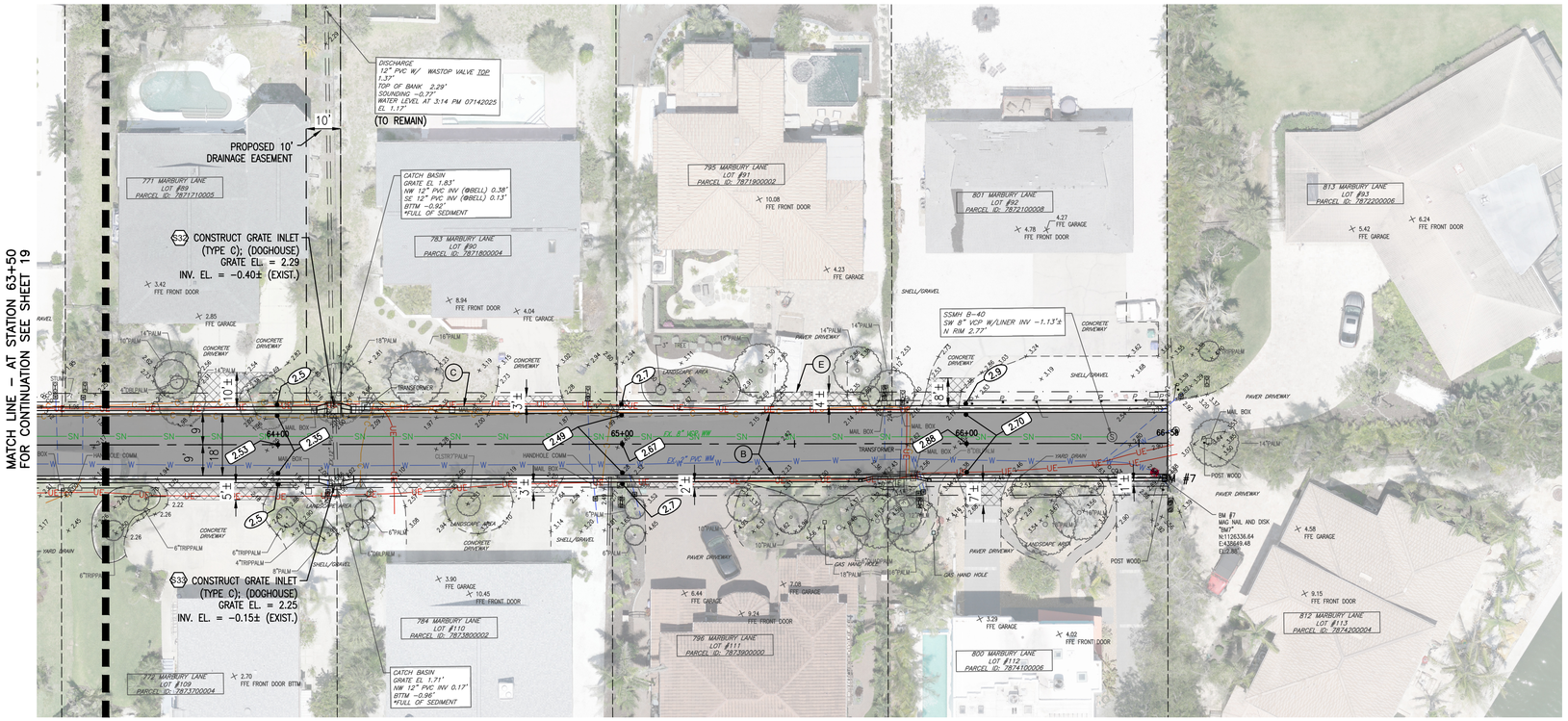

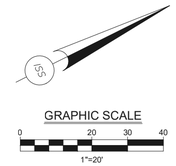

CONSTRUCTION KEYNOTES

- (A) CONSTRUCT SAW-CUT AND MATCH EXISTING PAVEMENT WITH SMOOTH TRANSITION
- (B) CONSTRUCT ROADWAY RECONSTRUCTION
- (C) CONSTRUCT MIAMI CURB AND GUTTER (3,000 PSI CONCRETE W/FIBER REINFORCEMENT)
- (D) CONSTRUCT 2' VALLEY GUTTER (3,000 PSI CONCRETE W/FIBER REINFORCEMENT)
- (E) CONSTRUCT DRIVEWAY APRON REPLACEMENT/RESTORATION (TYP.); MATERIAL TO MATCH EXISTING
- (F) PROPOSED APPROX. GRADING/RESTORATION LIMITS

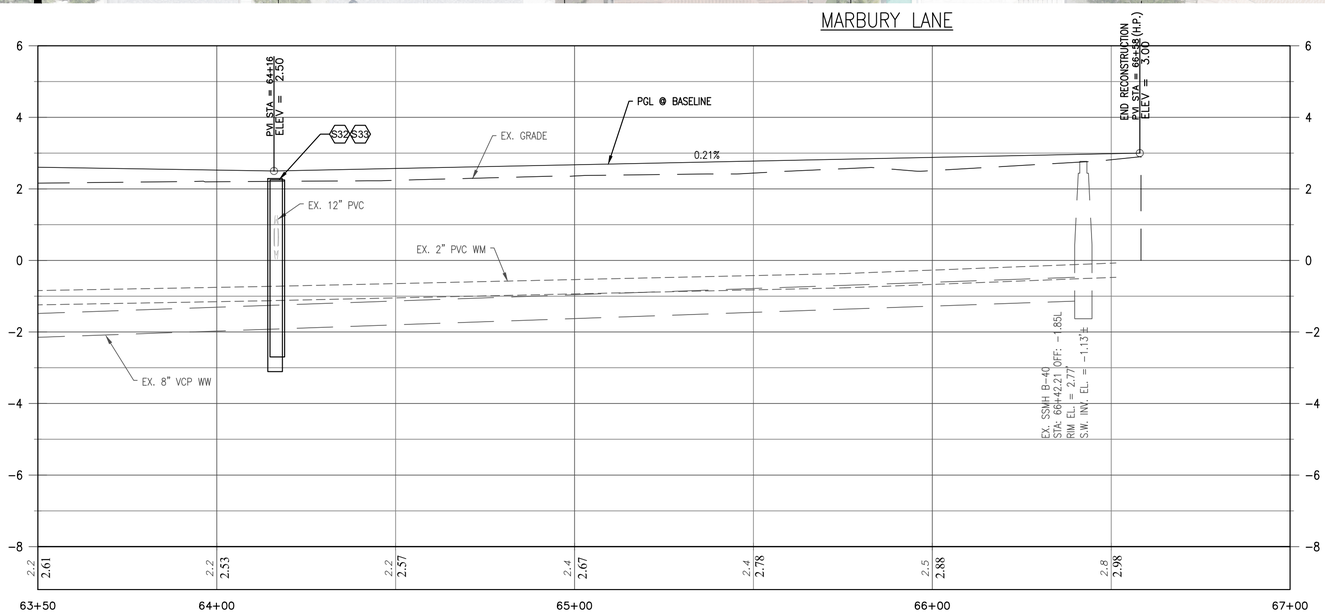

LEGEND

- PROPOSED ASPHALT PAVEMENT
- PROPOSED DRIVEWAY RESTORATION
- EXISTING FACILITIES
- EXISTING RIGHT-OF-WAY LINE
- PROPOSED APPROX. GRADING/RESTORATION LIMITS
- EXISTING FIRE HYDRANT
- x 3.27 EXISTING SPOT ELEVATION
- W W EXISTING WATER MAIN/SERVICE
- SN SN EXISTING WASTEWATER MAIN/SERVICE
- G G EXISTING GAS LINE
- C C EXISTING COMMUNICATIONS LINE
- UE UE EXISTING ELECTRIC LINE
- PROPOSED STORM STRUCTURE AND STORM PIPE
- 24.15 PROPOSED FINISHED GRADE (PAVED)
- 25.1 PROPOSED FINISHED GRADE (UNPAVED)

GRAPHIC SCALE
HOR. 0 20 1"=20'
VER. 0 2 1"=2'

NO.	DATE:	REVISION

INFRASTRUCTURE SOLUTION SERVICES
An HR Green Company

7319 Merchant Court
Sarasota, FL 34240
Phone: (941) 526-0813
FBPE CA# 29992

TOWN OF LONGBOAT KEY
PUBLIC WORKS DEPARTMENT
600 GENERAL HARRIS STREET
LONGBOAT KEY, FL 34228
PHONE (941) 316-1988

SLEEPY LAGOON
GENERAL HARRIS, PENFIELD, MARBURY

DRAWING TITLE: **PLAN AND PROFILE (MARBURY LANE)**

PROJ. MGR.:	DRWN. BY:	CHKD. BY:	PROJECT NO.:
DMB	WSH	MWM	LBK003
SCALE: 1" = 20'	DATE: 05/15/2026		SHEET NO.: 20 OF 56

10/8/2026 5:24:17 PM

Z:\Projects\Sarasota Region\Longboat Key, Town of\LBK003 – 2504561 – Sleepy Lagoon Gen Harris, Penfield, Marbury\Drawings\ISS DWG\2 Eng\Final Dwg\LBK003 – 7 – PLAN_PROF.dwg

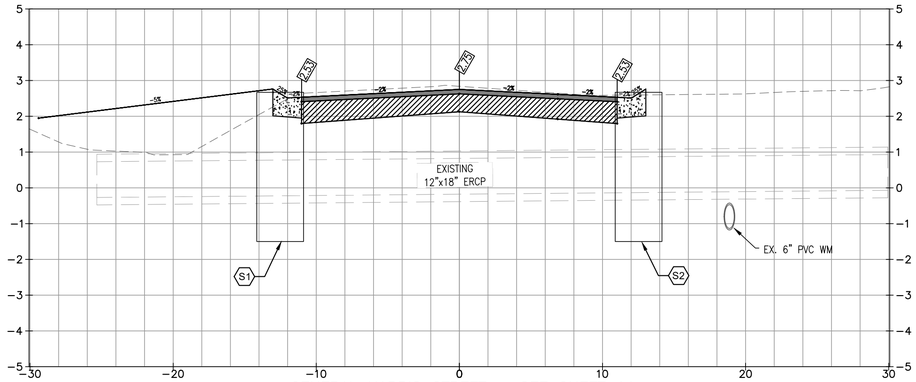

GENERAL HARRIS STREET – SEE SHEET 11

12+66

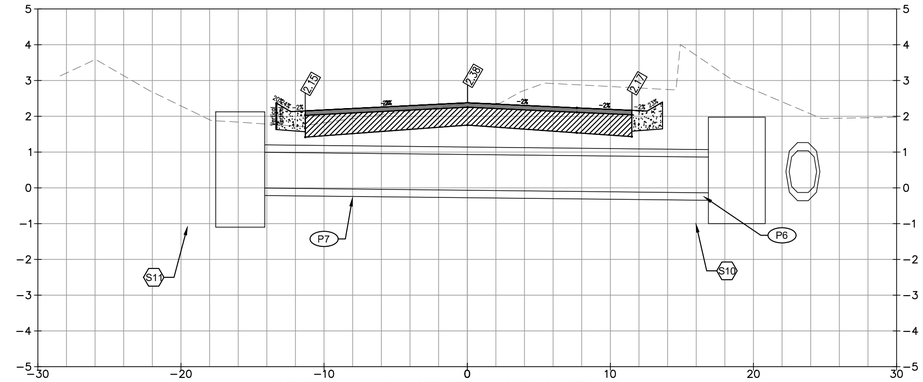

GENERAL HARRIS STREET – SEE SHEET 13

22+02

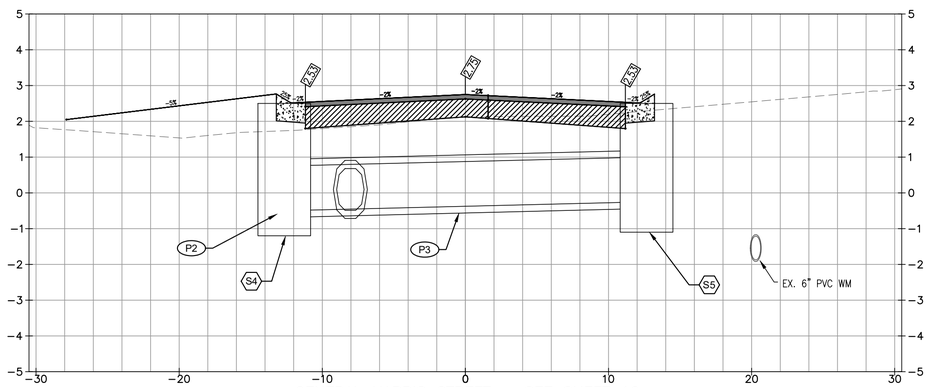

GENERAL HARRIS STREET – SEE SHEET 12

16+34

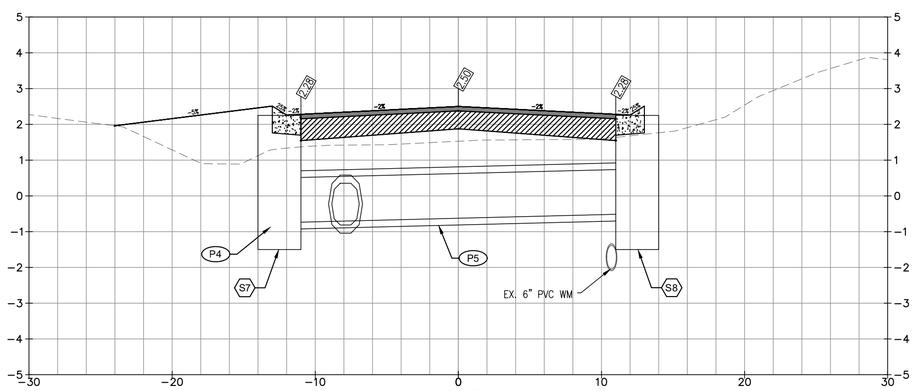

GENERAL HARRIS STREET – SEE SHEET 13

20+09

GRAPHIC SCALE

HOR. 0 5 1"=5'

VER. 0 2 1"=2'

NO.	DATE:	REVISION

INFRASTRUCTURE SOLUTION SERVICES

An HR Green Company

7319 Merchant Court
Sarasota, FL 34240
Phone: (941) 526-0813
FBPE CA# 29992

TOWN OF LONGBOAT KEY
PUBLIC WORKS DEPARTMENT
600 GENERAL HARRIS STREET
LONGBOAT KEY, FL 34228
PHONE (941) 316-1988

SLEEPY LAGOON
GENERAL HARRIS, PENFIELD, MARBURY

DRAWING TITLE: **DRAINAGE STRUCTURES (GENERAL HARRIS STREET)**

PROJ. MGR.:	DRWN. BY:	CHKD. BY:	PROJECT NO.:
DMB	WSH	MWM	LBK003
SCALE: AS NOTED	DATE: 05/15/2026		SHEET NO.: 21 OF 56

10/8/2026 3:34:02 PM

Z:\Projects\Sarasota Region\Longboat Key, Town of\LBK003 – 2504561 – Sleepy Lagoon Gen Harris, Penfield, Marbury\Drawings\ISS DWG\2 Eng\Final Dwg\LBK003 – 8 – DRAIN_STRUCT.dwg

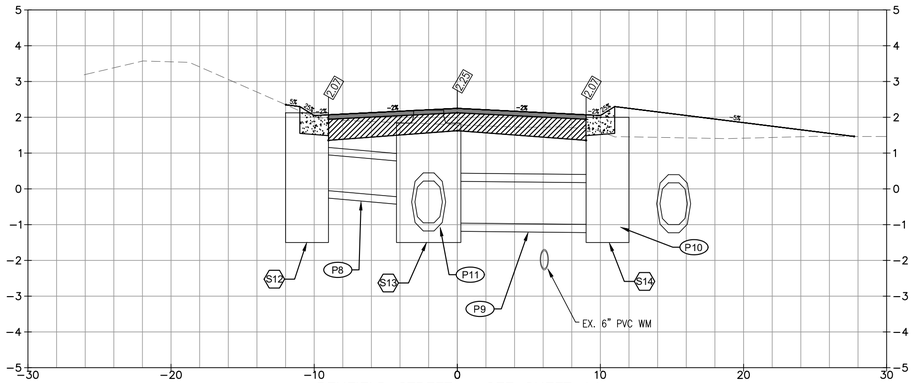

PENFIELD STREET – SEE SHEET 14

31+44

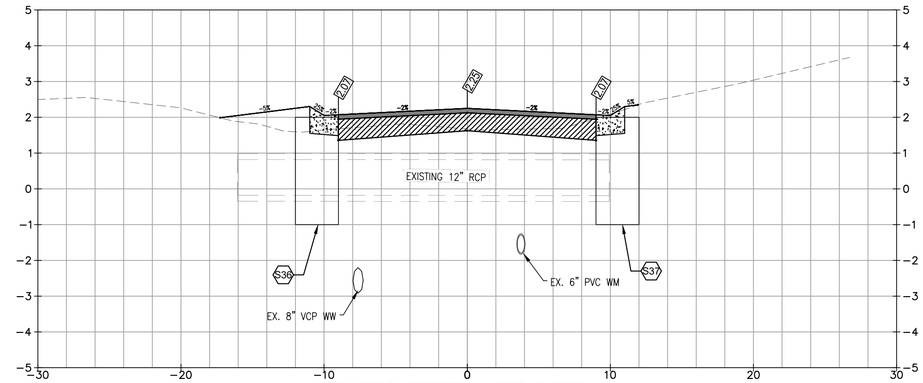

PENFIELD STREET – SEE SHEET 15

38+55

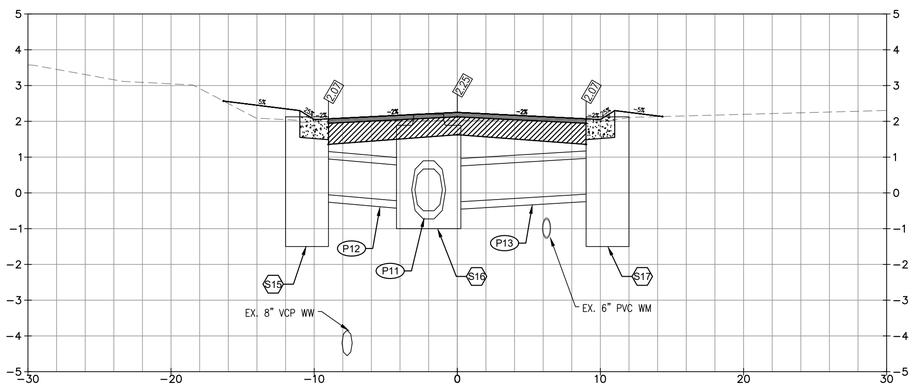

PENFIELD STREET – SEE SHEET 14

33+78

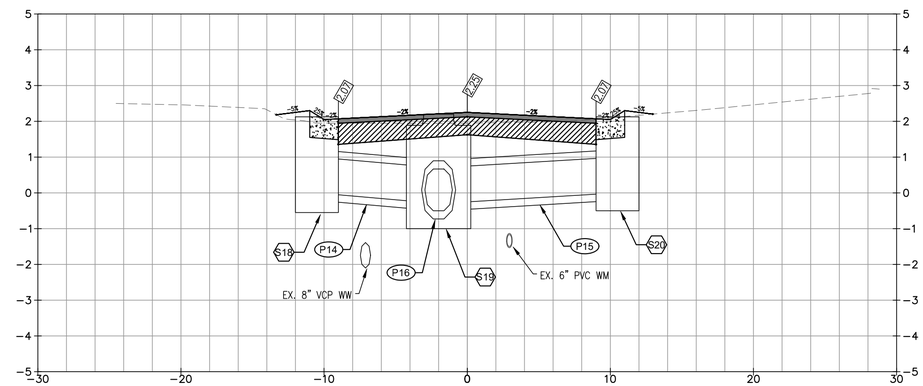

PENFIELD STREET – SEE SHEET 16

40+90

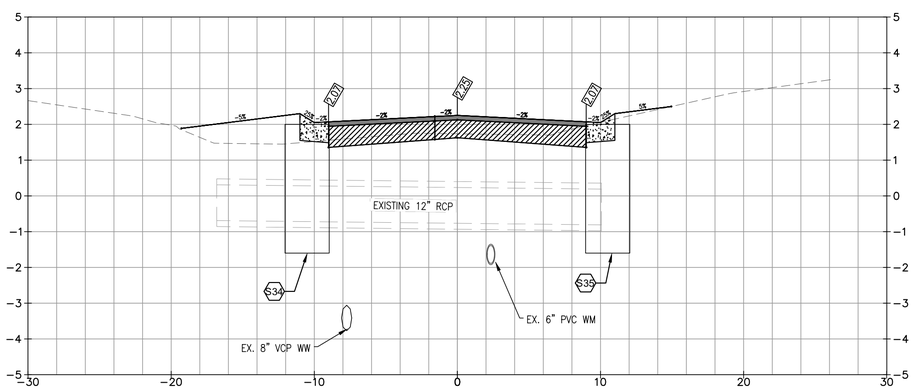

PENFIELD STREET – SEE SHEET 15

36+06

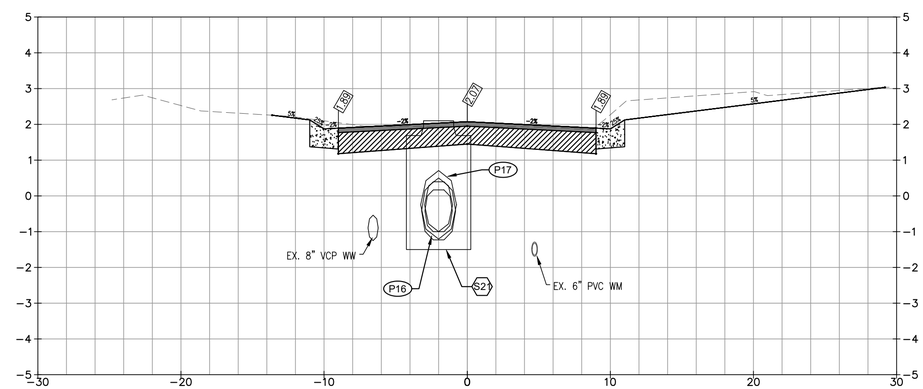

PENFIELD STREET – SEE SHEET 16

43+00

GRAPHIC SCALE

HOR. 0 5 1"=5'

VER. 0 2 1"=2'

NO.	DATE:	REVISION

INFRASTRUCTURE SOLUTION SERVICES

An HR Green Company

7319 Merchant Court
Sarasota, FL 34240
Phone: (941) 526-0813
FBPE CA# 29992

TOWN OF LONGBOAT KEY
PUBLIC WORKS DEPARTMENT
600 GENERAL HARRIS STREET
LONGBOAT KEY, FL 34228
PHONE (941) 316-1988

SLEEPY LAGOON
GENERAL HARRIS, PENFIELD, MARBURY

DRAWING TITLE: **DRAINAGE STRUCTURES (PENFIELD STREET)**

PROJ. MGR.:	DRWN. BY:	CHKD. BY:	PROJECT NO.:
DMB	WSH	MWM	LBK003
SCALE: AS NOTED	DATE: 05/15/2026		SHEET NO.: 22 OF 56

10/8/2026 3:35:19 PM

Z:\Projects\Sarasota Region\Longboat Key, Town of\LBK003 – 2504561 – Sleepy Lagoon Gen Harris, Penfield, Marbury\Drawings\ISS DWG\2 Eng\Final Dwg\LBK003 – 8 – DRAIN_STRUCT.dwg

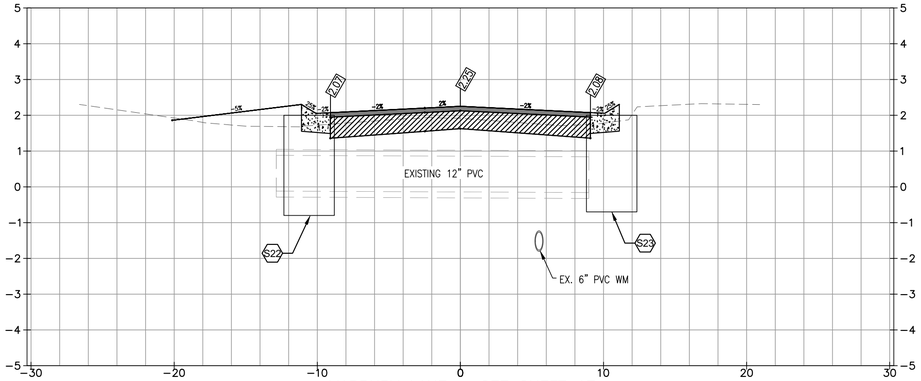

MARBURY LANE – SEE SHEET 17

52+96

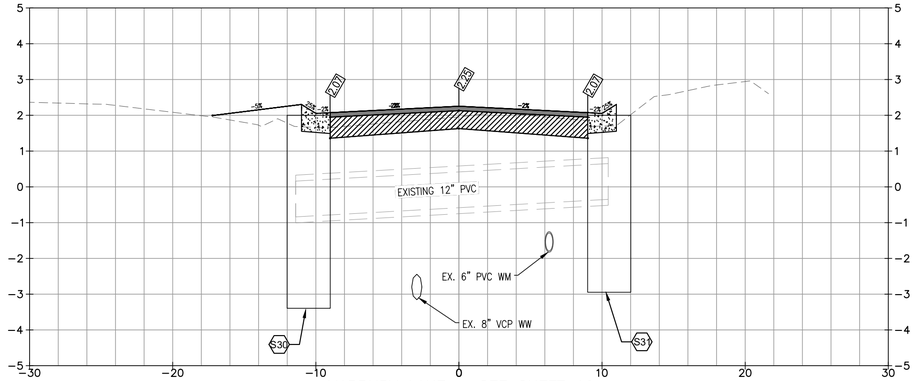

MARBURY LANE – SEE SHEET 19

60+99

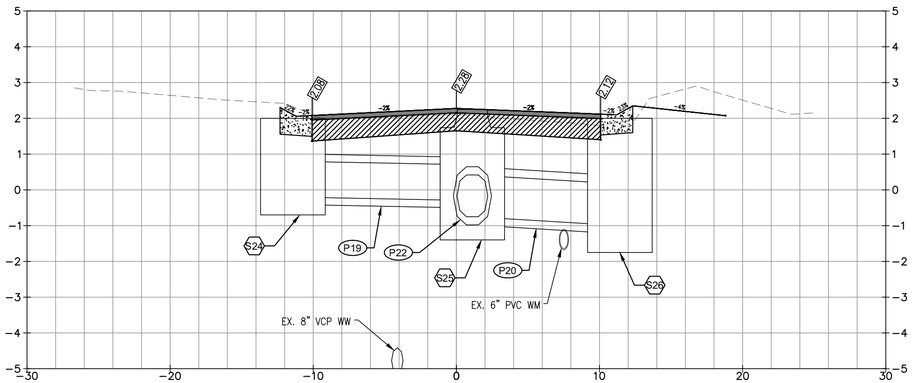

MARBURY LANE – SEE SHEET 18

56+13

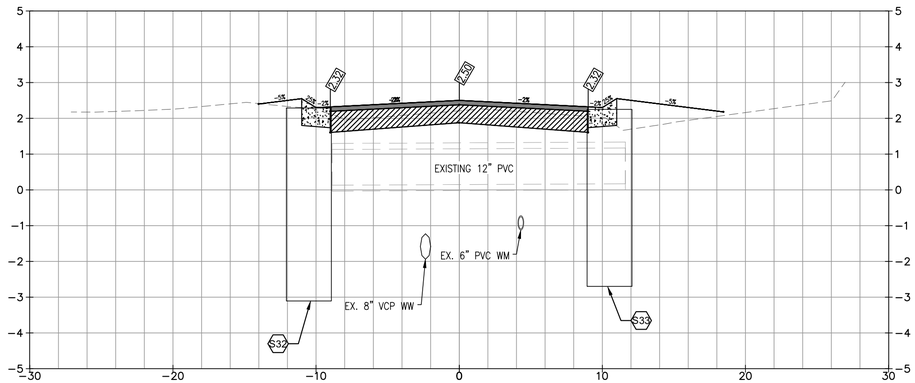

MARBURY LANE – SEE SHEET 20

64+17

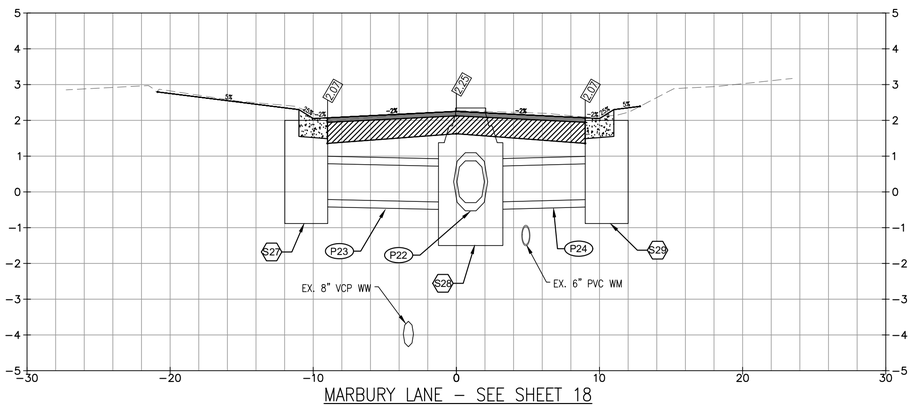

MARBURY LANE – SEE SHEET 18

58+24

GRAPHIC SCALE

HOR. 0 5 1"=5'

VER. 0 2 1"=2'

NO.	DATE:	REVISION

INFRASTRUCTURE SOLUTION SERVICES

An HR Green Company

7319 Merchant Court
Sarasota, FL 34240
Phone: (941) 526-0813
FBPE CA# 29992

TOWN OF LONGBOAT KEY
PUBLIC WORKS DEPARTMENT
600 GENERAL HARRIS STREET
LONGBOAT KEY, FL 34228
PHONE (941) 316-1988

SLEEPY LAGOON
GENERAL HARRIS, PENFIELD, MARBURY

DRAWING TITLE: **DRAINAGE STRUCTURES (MARBURY LANE)**

PROJ. MGR.:	DRWN. BY:	CHKD. BY:	PROJECT NO.:
DMB	WSH	MWM	LBK003
SCALE: AS NOTED	DATE: 05/15/2026		SHEET NO.: 23 OF 56

10/8/2026 3:22:01 PM

Z:\Projects\Sarasota Region\Longboat Key, Town of\LBK003 – 2504561 – Sleepy Lagoon Gen Harris, Penfield, Marbury\Drawings\ISS DWG\2 Eng\Final Dwg\LBK003 – 8 – DRAIN_STRUCT.dwg

GENERAL HARRIS STREET

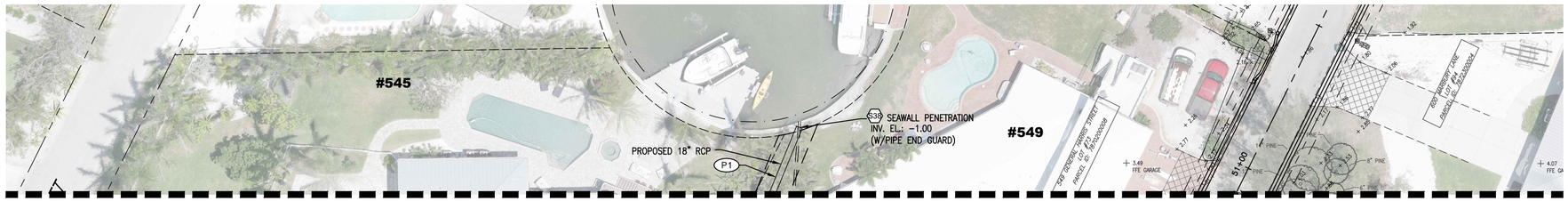

MATCH LINE – SEE SHEET 12

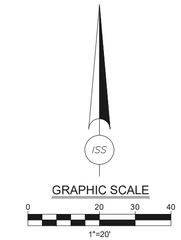

PENFIELD STREET

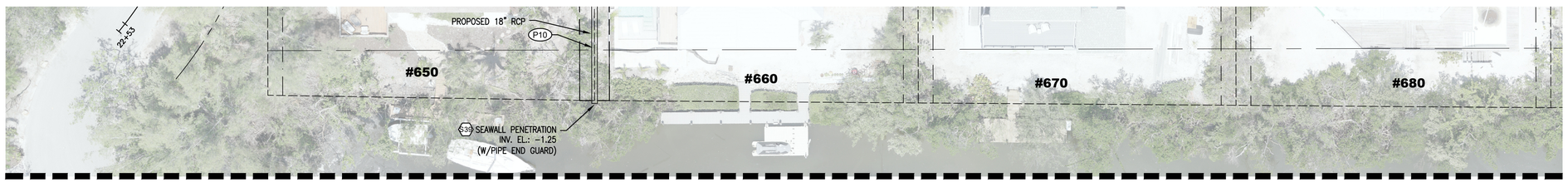

MATCH LINE – SEE SHEET 14

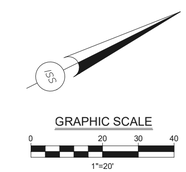

MARBURY LANE

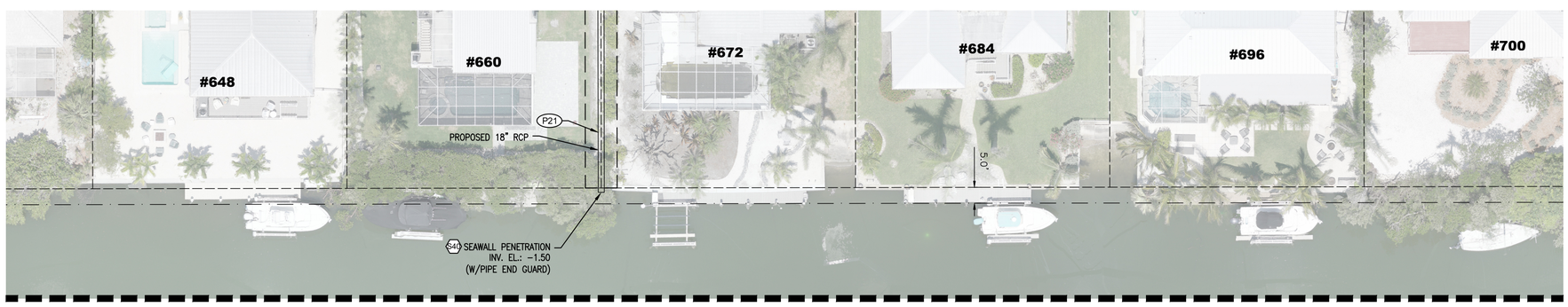

MATCH LINE – SEE SHEET 18

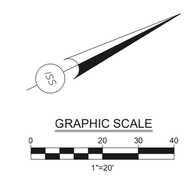

NO.	DATE:	REVISION

INFRASTRUCTURE SOLUTION SERVICES
An HR Green Company

7319 Merchant Court
Sarasota, FL 34240
Phone: (941) 526-0813
FBPE CA# 29992

TOWN OF LONGBOAT KEY
PUBLIC WORKS DEPARTMENT
600 GENERAL HARRIS STREET
LONGBOAT KEY, FL 34228
PHONE (941) 316-1988

SLEEPY LAGOON
GENERAL HARRIS, PENFIELD, MARBURY

DRAWING TITLE: **OUTFALL OUTLET PLAN**

PROJ. MGR.:	DRWN. BY:	CHKD. BY:	PROJECT NO.:
DMB	WSH	MWM	LBK003
SCALE: 1" = 20'	DATE: 05/15/2026		SHEET NO.: 24 OF 56

10/8/2026 3:19:51 PM

Z:\Projects\Sarasota Region\Longboat Key, Town of\LBK003 – 2504561 – Sleepy Lagoon Gen Harris, Penfield, Marbury\Drawings\ISS DWG\2 Eng\Final Dwg\LBK003 – 9 – OUTFALL OUTLET PLAN.dwg

NO.	DATE:	REVISION

INFRASTRUCTURE SOLUTION SERVICES
An HR Green Company

7319 Merchant Court
Sarasota, FL 34240
Phone: (941) 526-0813
FBPE CA# 29992

TOWN OF LONGBOAT KEY
PUBLIC WORKS DEPARTMENT
600 GENERAL HARRIS STREET
LONGBOAT KEY, FL 34228
PHONE (941) 316-1988

SLEEPY LAGOON
GENERAL HARRIS, PENFIELD, MARBURY

DRAWING TITLE: **OUTFALL PROFILES**

PROJ. MGR.:	DRWN. BY:	CHKD. BY:	PROJECT NO.:
DMB	WSH	MWM	LBK003

SCALE:	DATE:	SHEET NO.:
AS NOTED	05/15/2026	25 OF 56

10/8/2026 3:27:12 PM

Z:\Projects\Sarasota Region\Longboat Key, Town of\LBK003 - 2504561 - Sleepy Lagoon Gen Harris, Penfield, Marbury\Drawings\ISS DWG\2 Eng\Final Dwg\LBK003 - 9 - OUTFALL PROF.dwg

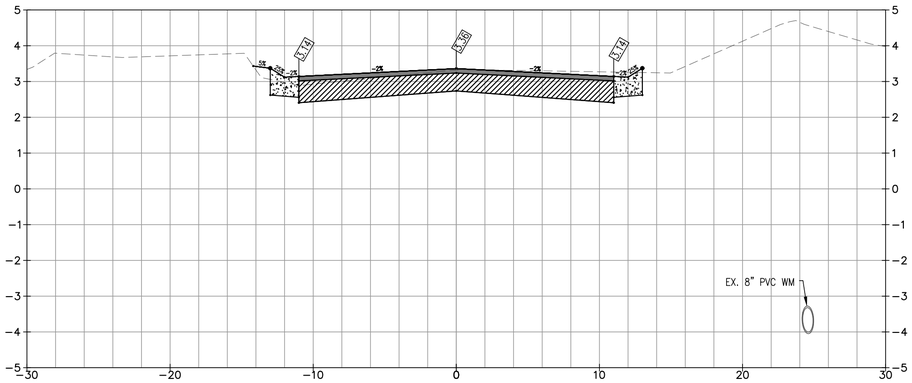

11+00

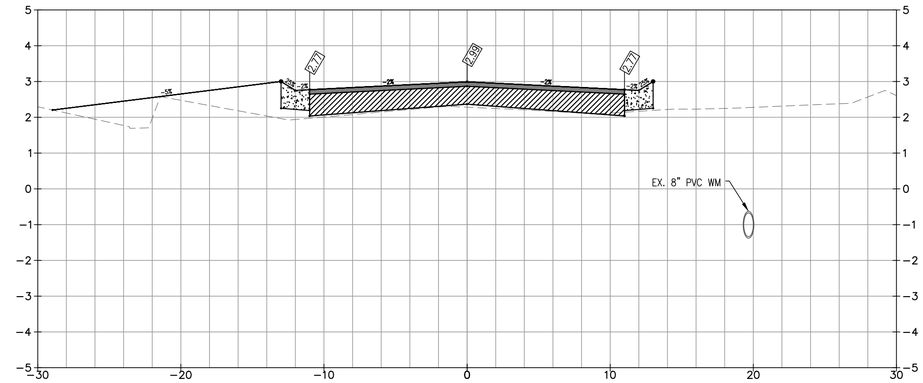

14+00

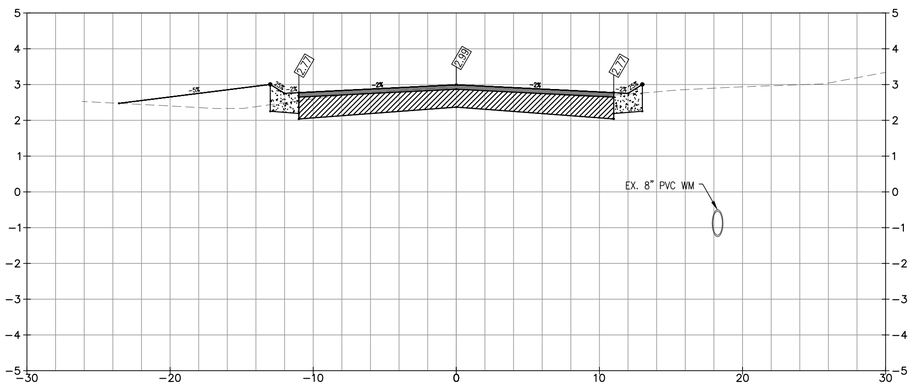

12+00

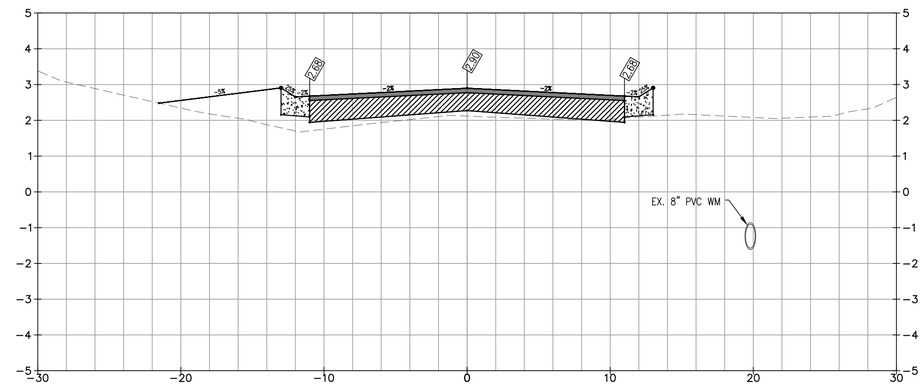

15+00

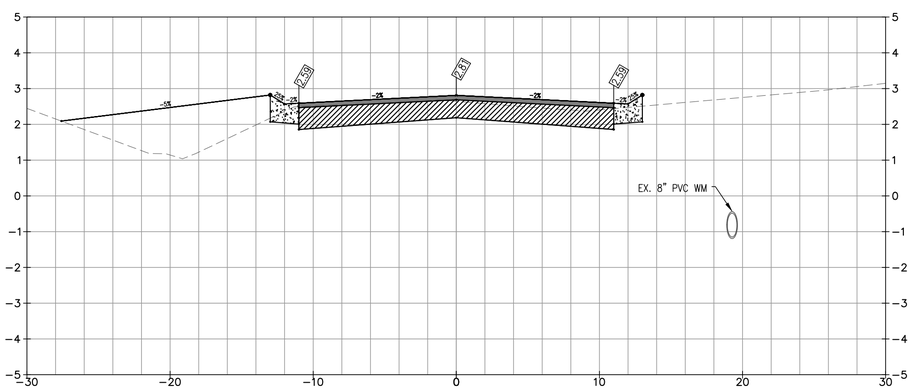

13+00

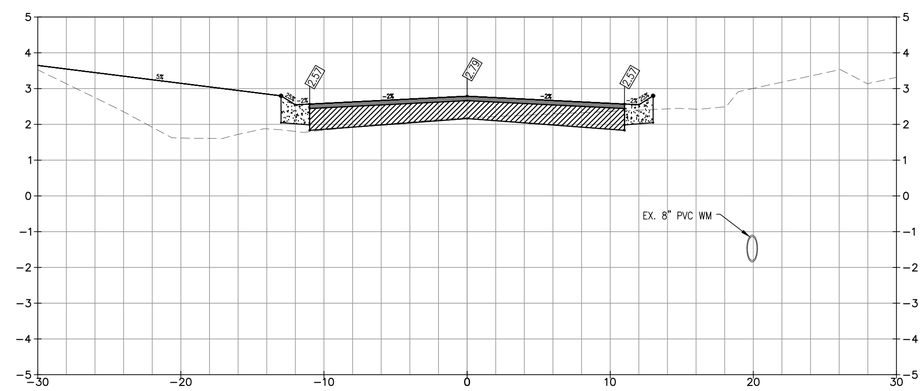

16+00

GRAPHIC SCALE

HOR. 0 5 1"=5'

VER. 0 2 1"=2'

NO.	DATE:	REVISION

10/8/2026 3:29:35 PM

INFRASTRUCTURE SOLUTION SERVICES

An HR Green Company

7319 Merchant Court
Sarasota, FL 34240
Phone: (941) 526-0813
FBPE CA# 29992

TOWN OF LONGBOAT KEY
PUBLIC WORKS DEPARTMENT
600 GENERAL HARRIS STREET
LONGBOAT KEY, FL 34228
PHONE (941) 316-1988

SLEEPY LAGOON
GENERAL HARRIS, PENFIELD, MARBURY

DRAWING TITLE: **CROSS SECTIONS (GENERAL HARRIS STREET)**

PROJ. MGR.:	DRWN. BY:	CHKD. BY:	PROJECT NO.:
DMB	WSH	MWM	LBK003
SCALE: AS NOTED	DATE: 05/15/2026		SHEET NO.: 26 OF 56

Z:\Projects\Sarasota Region\Longboat Key, Town of\LBK003 - 2504561 - Sleepy Lagoon Gen Harris, Penfield, Marbury\Drawings\ISS DWG\2 Eng\Final Dwg\LBK003 - 10 - CROSS_SECT.dwg

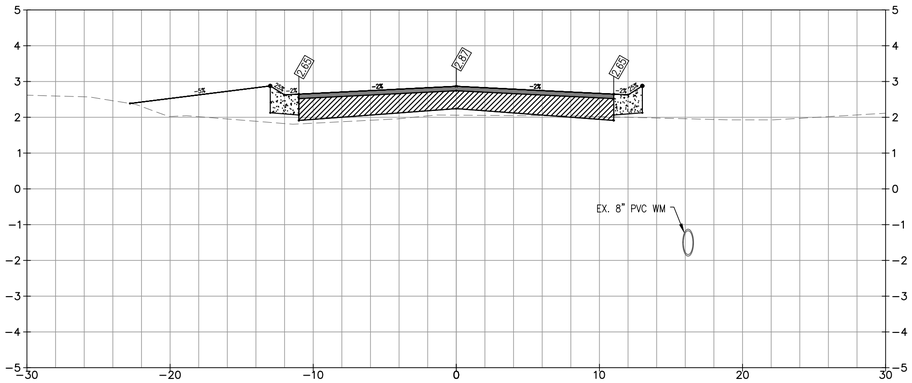

17+00

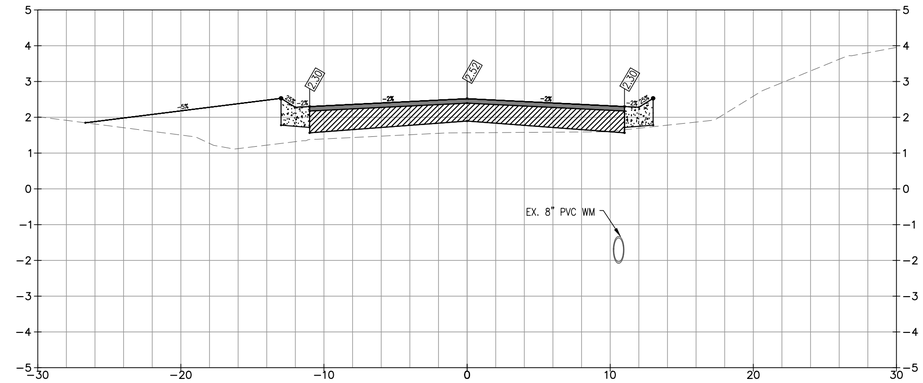

20+00

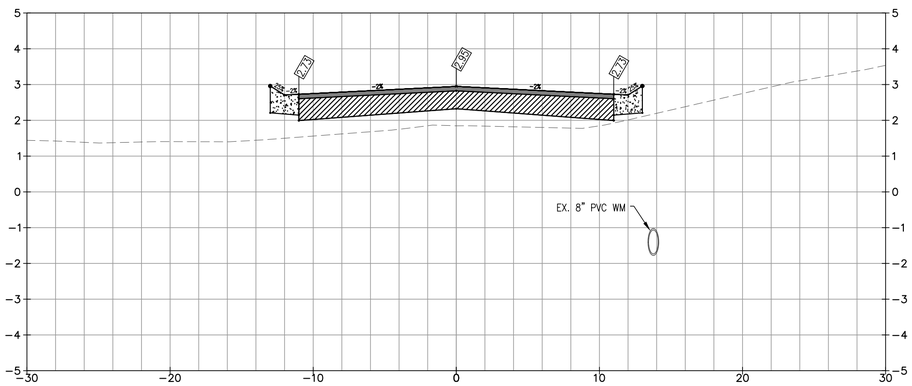

18+00

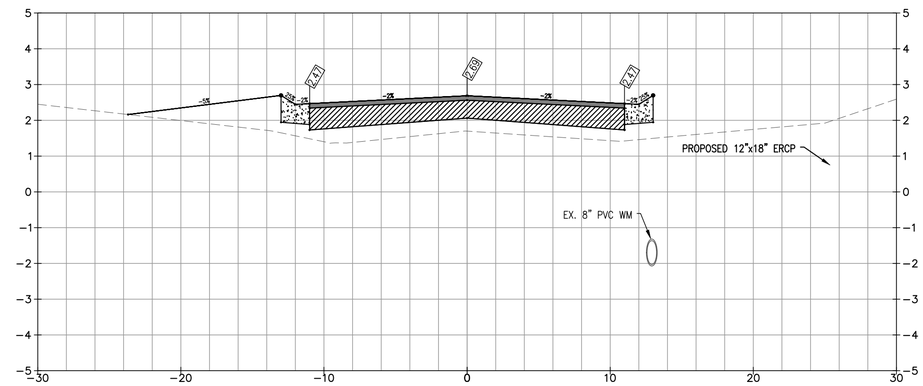

21+00

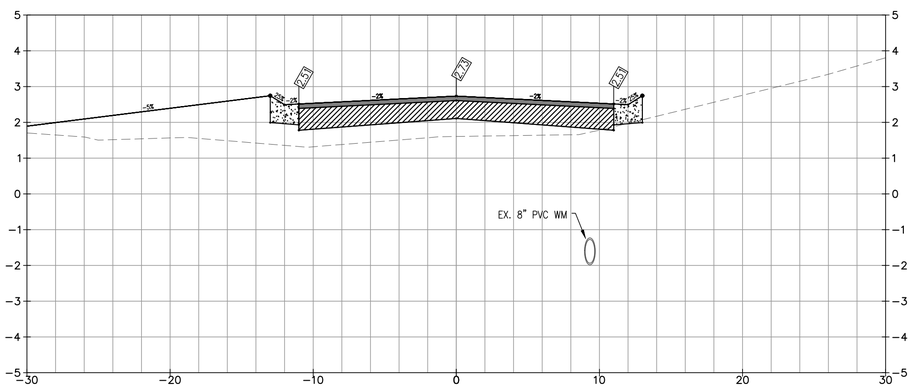

19+00

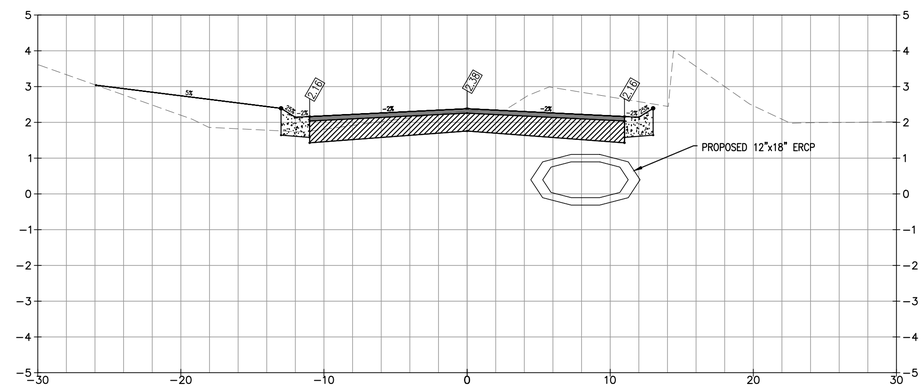

22+00

GRAPHIC SCALE

HOR. 0 5 1"=5'

VER. 0 2 1"=2'

NO.	DATE:	REVISION

10/8/2026 3:23:02 PM

INFRASTRUCTURE SOLUTION SERVICES

An HR Green Company

7319 Merchant Court
Sarasota, FL 34240
Phone: (941) 526-0813
FBPE CA# 29992

TOWN OF LONGBOAT KEY
PUBLIC WORKS DEPARTMENT
600 GENERAL HARRIS STREET
LONGBOAT KEY, FL 34228
PHONE (941) 316-1988

SLEEPY LAGOON
GENERAL HARRIS, PENFIELD, MARBURY

DRAWING TITLE: **CROSS SECTIONS (GENERAL HARRIS STREET)**

PROJ. MGR.:	DRWN. BY:	CHKD. BY:	PROJECT NO.:
DMB	WSH	MWM	LBK003
SCALE: AS NOTED	DATE: 05/15/2026		SHEET NO.: 27 OF 56

Z:\Projects\Sarasota Region\Longboat Key, Town of\LBK003 - 2504561 - Sleepy Lagoon Gen Harris, Penfield, Marbury\Drawings\ISS DWG\2 Eng\Final Dwg\LBK003 - 10 - CROSS_SECT.dwg

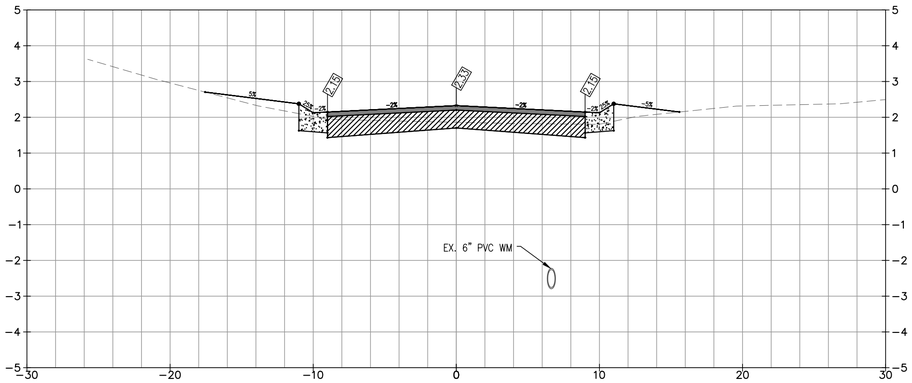

31+00

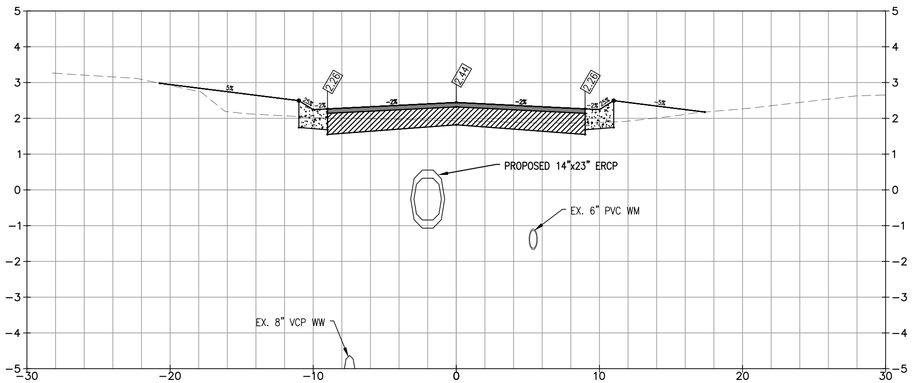

32+00

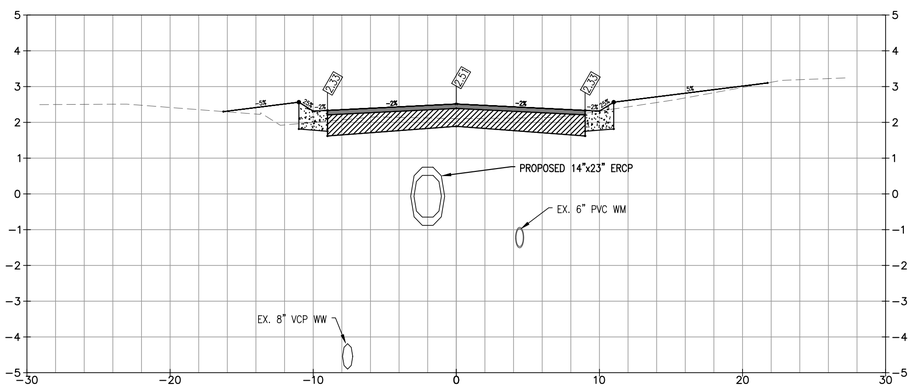

33+00

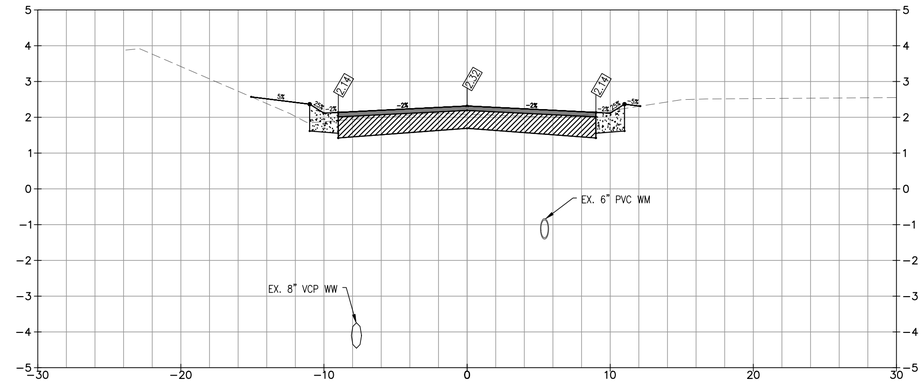

34+00

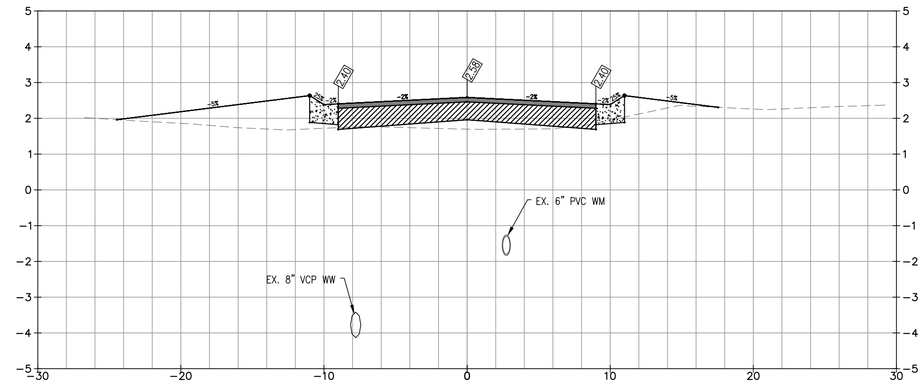

35+00

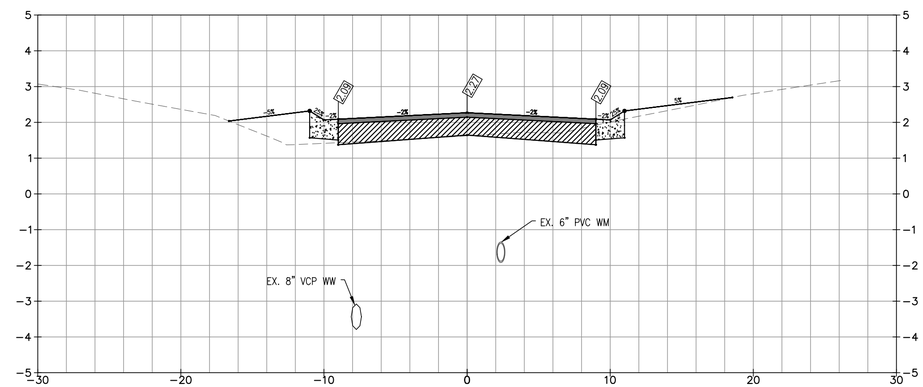

36+00

GRAPHIC SCALE

HOR. 0 5 1"=5'

VER. 0 2 1"=2'

NO.	DATE:	REVISION

INFRASTRUCTURE SOLUTION SERVICES

An HR Green Company

7319 Merchant Court
Sarasota, FL 34240
Phone: (941) 526-0813
FBPE CA# 29992

TOWN OF LONGBOAT KEY
PUBLIC WORKS DEPARTMENT
600 GENERAL HARRIS STREET
LONGBOAT KEY, FL 34228
PHONE (941) 316-1988

SLEEPY LAGOON
GENERAL HARRIS, PENFIELD, MARBURY

DRAWING TITLE: **CROSS SECTIONS (PENFIELD STREET)**

PROJ. MGR.:	DRWN. BY:	CHKD. BY:	PROJECT NO.:
DMB	WSH	MWM	LBK003
SCALE: AS NOTED	DATE: 05/15/2026		SHEET NO.: 28 OF 56

10/8/2026 3:23:32 PM

Z:\Projects\Sarasota Region\Longboat Key, Town of\LBK003 - 2504561 - Sleepy Lagoon Gen Harris, Penfield, Marbury\Drawings\ISS DWG\2 Eng\Final Dwg\LBK003 - 10 - CROSS_SECT.dwg

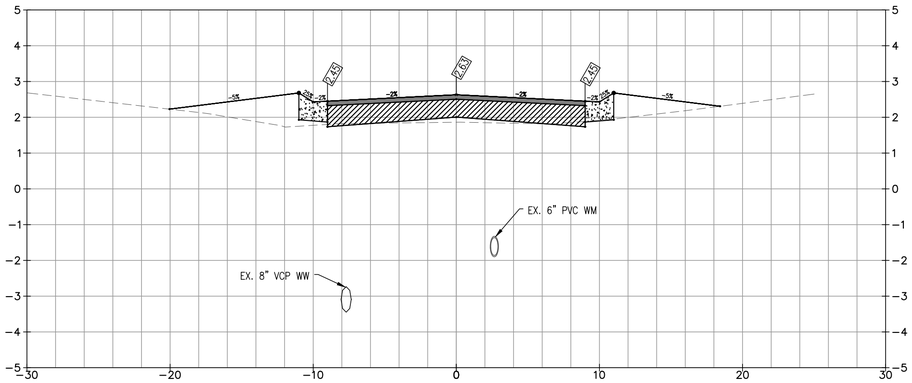

37+00

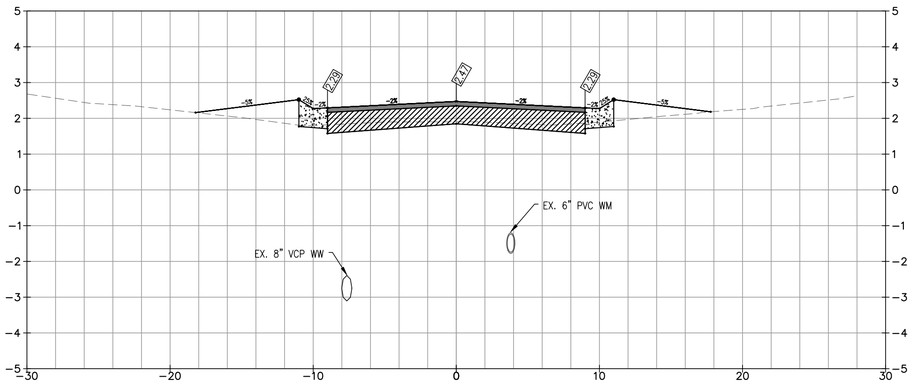

38+00

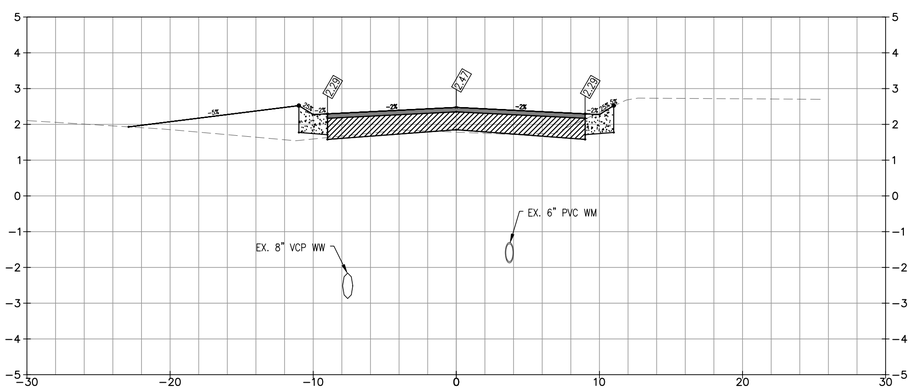

39+00

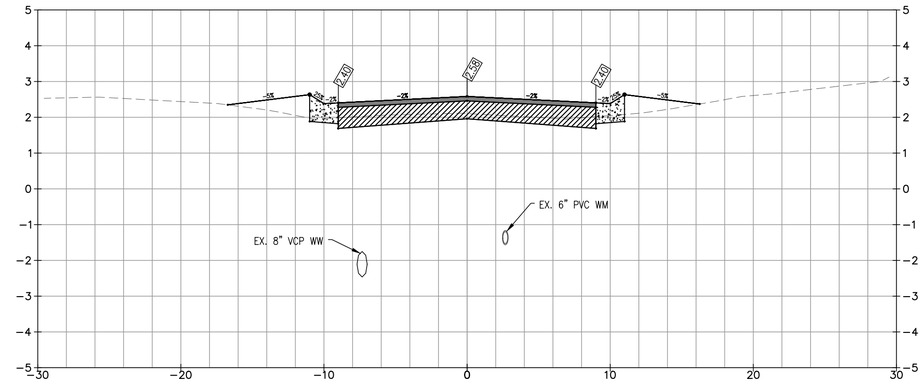

40+00

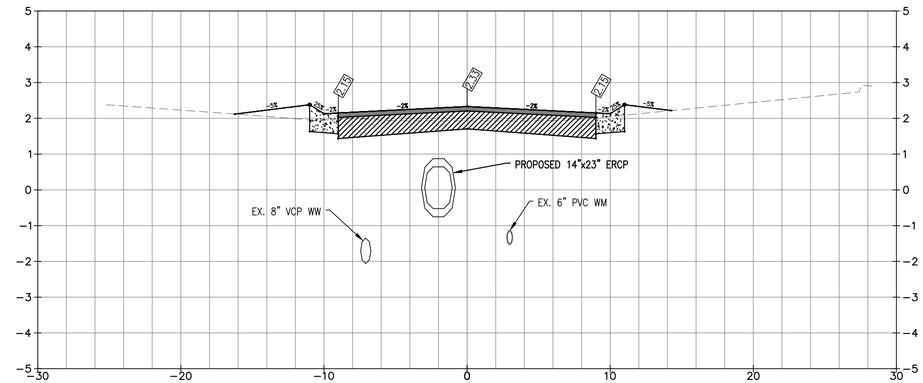

41+00

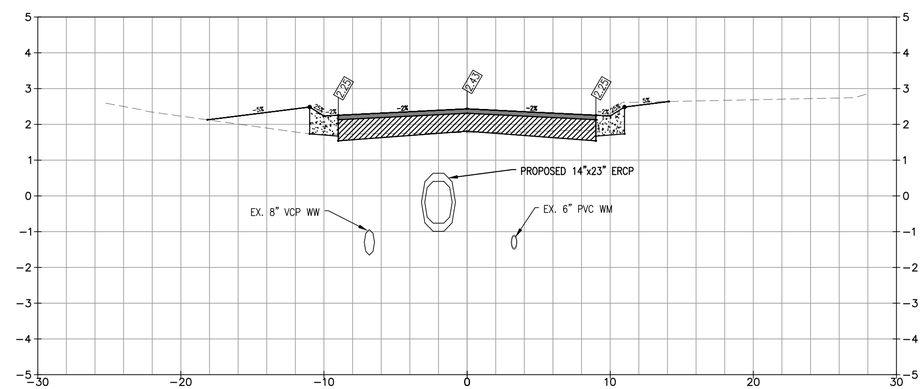

42+00

GRAPHIC SCALE

HOR. 0 5 1"=5'

VER. 0 2 1"=2'

NO.	DATE:	REVISION

10/8/2026 3:38:29 PM

INFRASTRUCTURE SOLUTION SERVICES

An HR Green Company

7319 Merchant Court
Sarasota, FL 34240
Phone: (941) 526-0813
FBPE CA# 29992

TOWN OF LONGBOAT KEY
PUBLIC WORKS DEPARTMENT
600 GENERAL HARRIS STREET
LONGBOAT KEY, FL 34228
PHONE (941) 316-1988

SLEEPY LAGOON
GENERAL HARRIS, PENFIELD, MARBURY

DRAWING TITLE: **CROSS SECTIONS (PENFIELD STREET)**

PROJ. MGR.:	DRWN. BY:	CHKD. BY:	PROJECT NO.:
DMB	WSH	MWM	LBK003
SCALE: AS NOTED	DATE: 05/15/2026		SHEET NO.: 29 OF 56

Z:\Projects\Sarasota Region\Longboat Key, Town of\LBK003 - 2504561 - Sleepy Lagoon Gen Harris, Penfield, Marbury\Drawings\ISS DWG\2 Eng\Final Dwg\LBK003 - 10 - CROSS_SECT.dwg

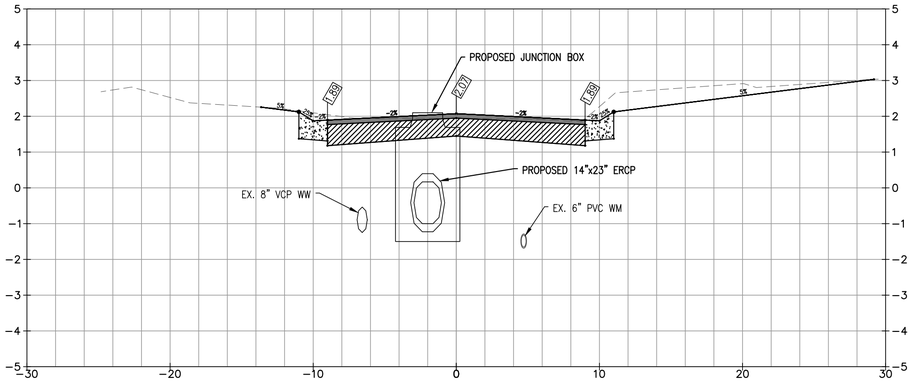

43+00

GRAPHIC SCALE

HOR. 0 5 1"=5'

VER. 0 2 1"=2'

NO.	DATE:	REVISION

INFRASTRUCTURE SOLUTION SERVICES

An HR Green Company

7319 Merchant Court
Sarasota, FL 34240
Phone: (941) 526-0813
FBPE CA# 29992

TOWN OF LONGBOAT KEY
PUBLIC WORKS DEPARTMENT
600 GENERAL HARRIS STREET
LONGBOAT KEY, FL 34228
PHONE (941) 316-1988

SLEEPY LAGOON
GENERAL HARRIS, PENFIELD, MARBURY

DRAWING TITLE: **CROSS SECTIONS (PENFIELD STREET)**

PROJ. MGR.:	DRWN. BY:	CHKD. BY:	PROJECT NO.:
DMB	WSH	MWM	LBK003

SCALE:	DATE:	SHEET NO.:
AS NOTED	05/15/2026	30 OF 56

10/8/2026 3:18:59 PM

Z:\Projects\Sarasota Region\Longboat Key, Town of\LBK003 - 2504561 - Sleepy Lagoon Gen Harris, Penfield, Marbury\Drawings\ISS DWG\2 Eng\Final Dwg\LBK003 - 10 - CROSS_SECT.dwg

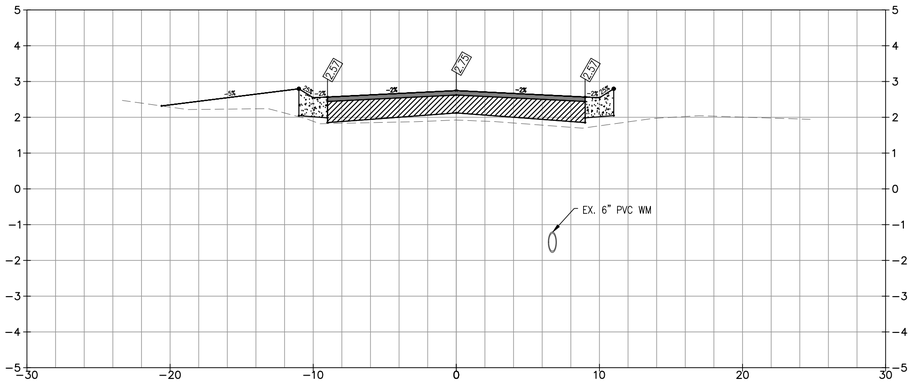

51+00

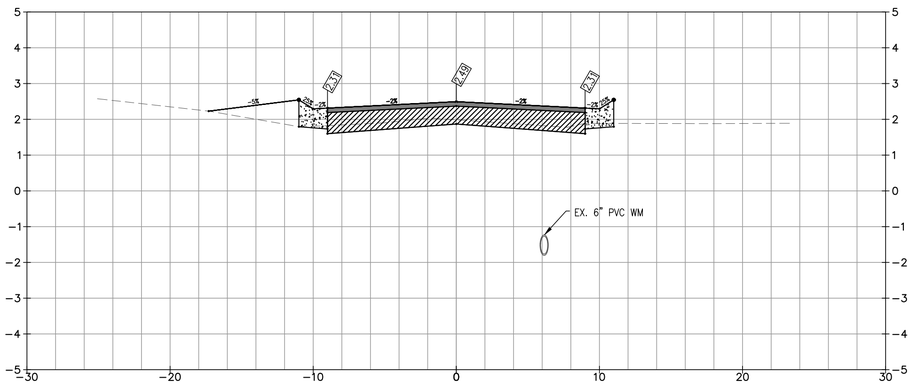

52+00

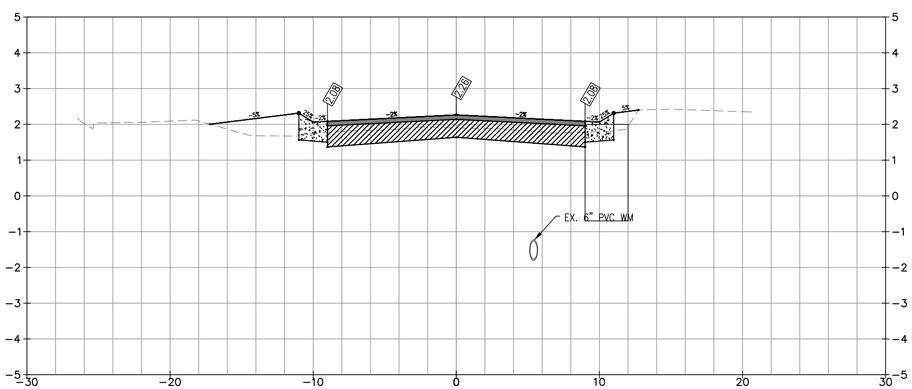

53+00

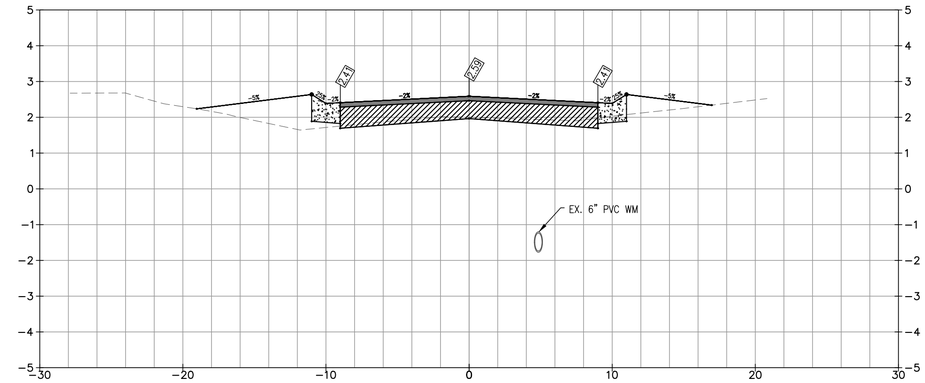

54+00

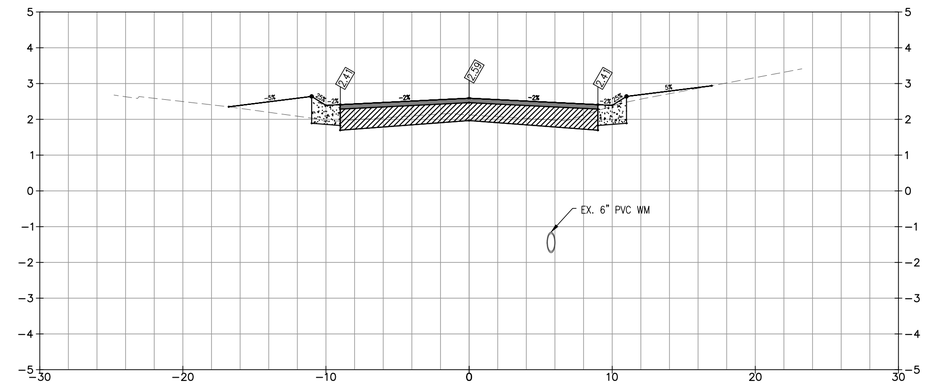

55+00

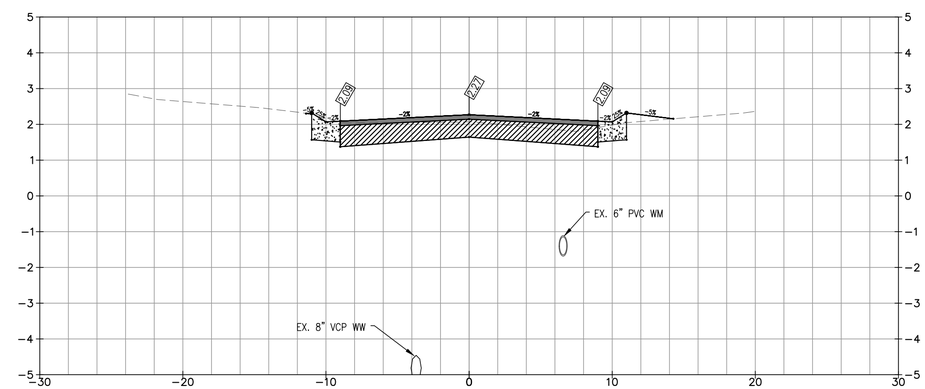

56+00

GRAPHIC SCALE

HOR. 0 5 1"=5'

VER. 0 2 1"=2'

NO.	DATE:	REVISION

INFRASTRUCTURE SOLUTION SERVICES

An HR Green Company

7319 Merchant Court
Sarasota, FL 34240
Phone: (941) 526-0813
FBPE CA# 29992

TOWN OF LONGBOAT KEY
PUBLIC WORKS DEPARTMENT
600 GENERAL HARRIS STREET
LONGBOAT KEY, FL 34228
PHONE (941) 316-1988

SLEEPY LAGOON
GENERAL HARRIS, PENFIELD, MARBURY

DRAWING TITLE: **CROSS SECTIONS (MARBURY LANE)**

PROJ. MGR.:	DRWN. BY:	CHKD. BY:	PROJECT NO.:
DMB	WSH	MWM	LBK003
SCALE: AS NOTED	DATE: 05/15/2026		SHEET NO.: 31 OF 56

10/8/2026 3:37:07 PM

Z:\Projects\Sarasota Region\Longboat Key, Town of\LBK003 - 2504561 - Sleepy Lagoon Gen Harris, Penfield, Marbury\Drawings\ISS DWG\2 Eng\Final Dwg\LBK003 - 10 - CROSS_SECT.dwg

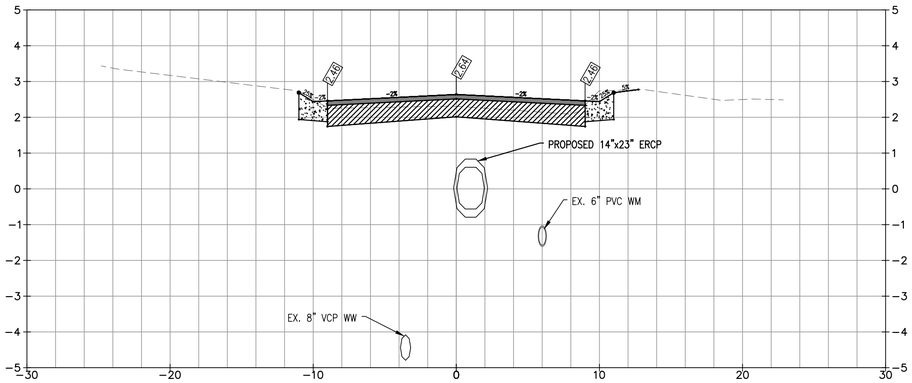

57+00

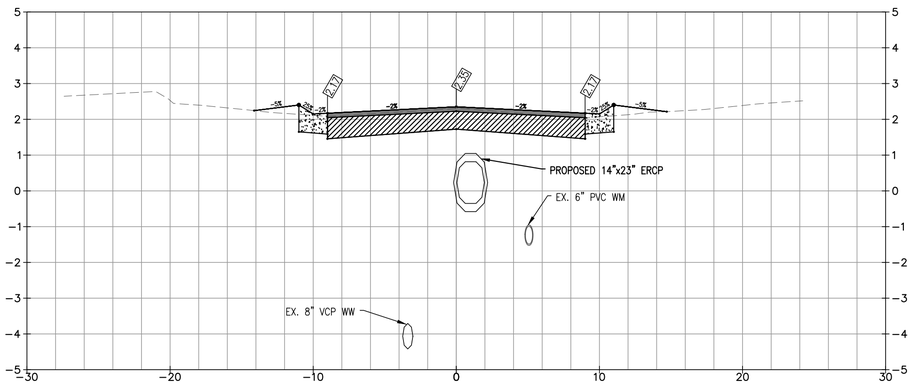

58+00

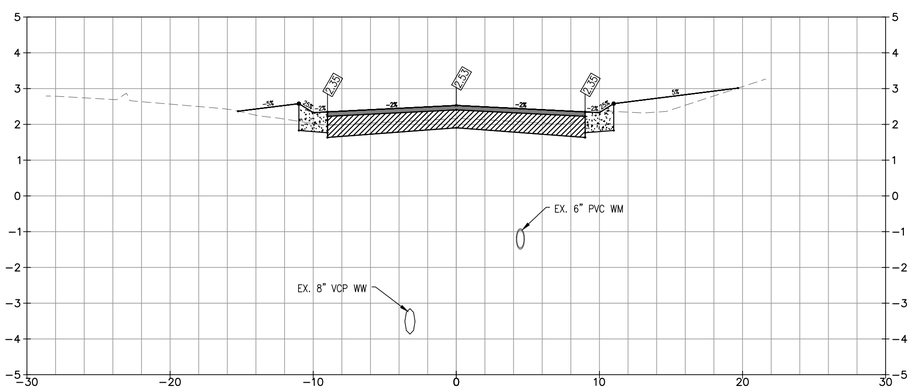

59+00

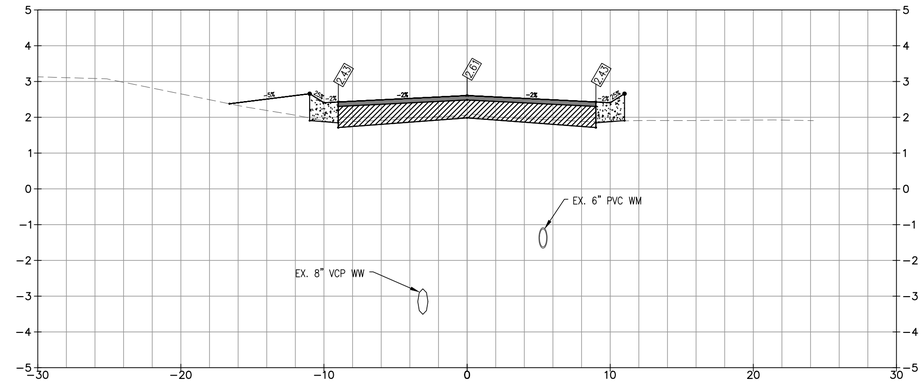

60+00

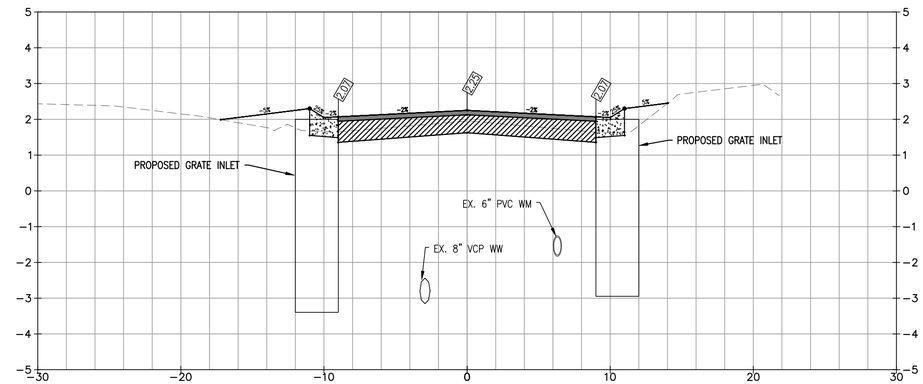

61+00

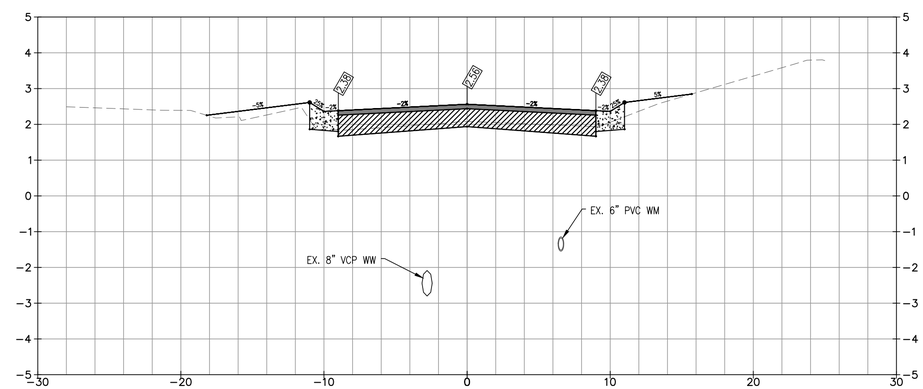

62+00

GRAPHIC SCALE

HOR. 0 5 1"=5'

VER. 0 2 1"=2'

NO.	DATE:	REVISION

INFRASTRUCTURE SOLUTION SERVICES

An HR Green Company

7319 Merchant Court
Sarasota, FL 34240
Phone: (941) 526-0813
FBPE CA# 29992

TOWN OF LONGBOAT KEY
PUBLIC WORKS DEPARTMENT
600 GENERAL HARRIS STREET
LONGBOAT KEY, FL 34228
PHONE (941) 316-1988

SLEEPY LAGOON
GENERAL HARRIS, PENFIELD, MARBURY

DRAWING TITLE: **CROSS SECTIONS (MARBURY LANE)**

PROJ. MGR.:	DRWN. BY:	CHKD. BY:	PROJECT NO.:
DMB	WSH	MWM	LBK003
SCALE: AS NOTED	DATE: 05/15/2026		SHEET NO.: 32 OF 56

10/8/2026 3:34:15 PM

Z:\Projects\Sarasota Region\Longboat Key, Town of\LBK003 - 2504561 - Sleepy Lagoon Gen Harris, Penfield, Marbury\Drawings\ISS DWG\2 Eng\Final Dwg\LBK003 - 10 - CROSS_SECT.dwg

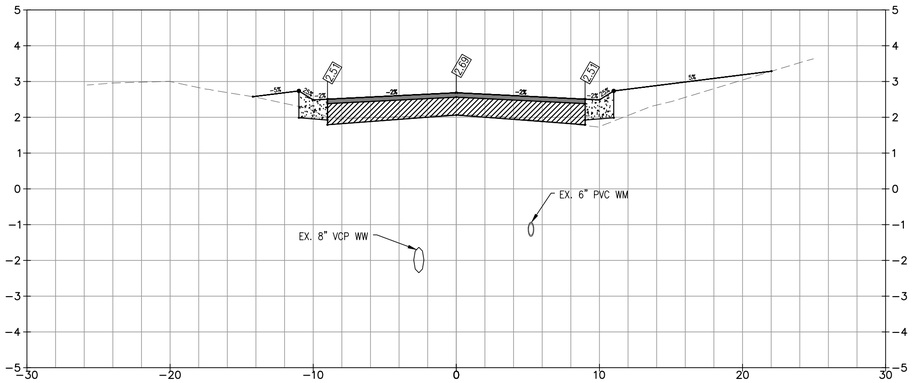

63+00

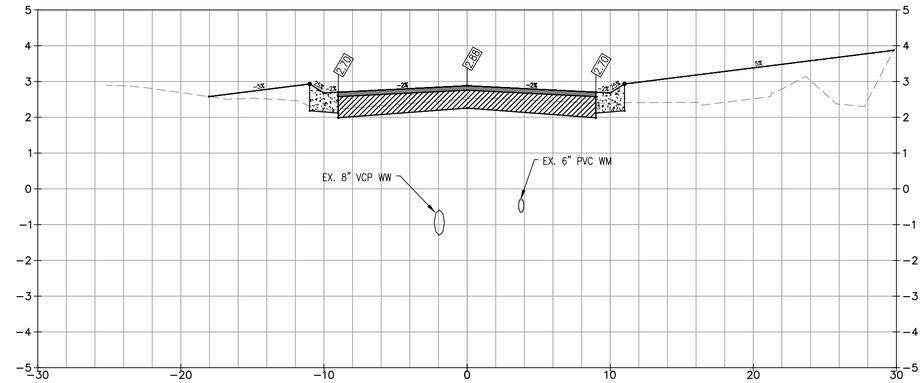

66+00

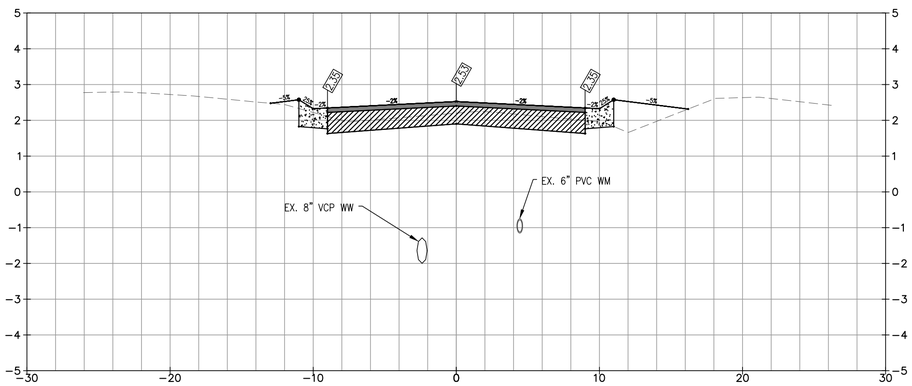

64+00

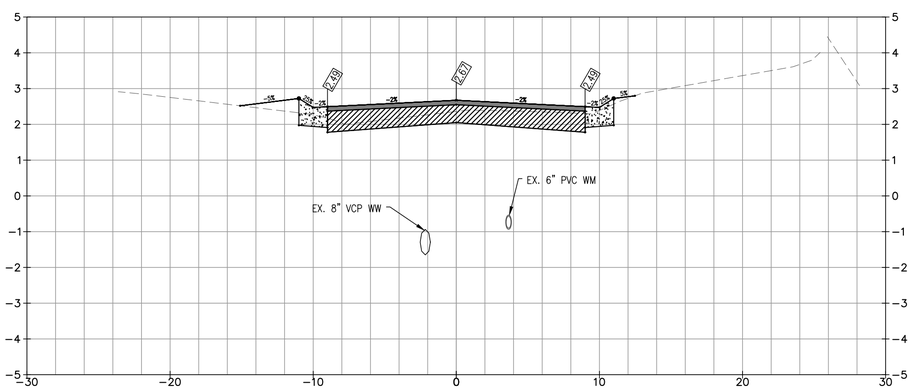

65+00

GRAPHIC SCALE

HOR. 0 5 1"=5'

VER. 0 2 1"=2'

NO.	DATE:	REVISION

10/8/2026 3:36:54 PM

INFRASTRUCTURE SOLUTION SERVICES

An HR Green Company

7319 Merchant Court
Sarasota, FL 34240
Phone: (941) 526-0813
FBPE CA# 29992

TOWN OF LONGBOAT KEY
PUBLIC WORKS DEPARTMENT
600 GENERAL HARRIS STREET
LONGBOAT KEY, FL 34228
PHONE (941) 316-1988

SLEEPY LAGOON
GENERAL HARRIS, PENFIELD, MARBURY

DRAWING TITLE: **CROSS SECTIONS (MARBURY LANE)**

PROJ. MGR.:	DRWN. BY:	CHKD. BY:	PROJECT NO.:
DMB	WSH	MWM	LBK003
SCALE: AS NOTED	DATE: 05/15/2026		SHEET NO.: 33 OF 56

Z:\Projects\Sarasota Region\Longboat Key, Town of\LBK003 - 2504561 - Sleepy Lagoon Gen Harris, Penfield, Marbury\Drawings\ISS DWG\2 Eng\Final Dwg\LBK003 - 10 - CROSS_SECT.dwg

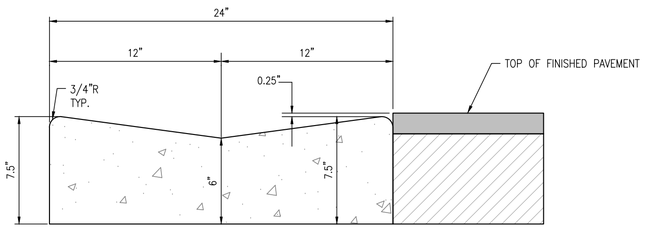

2" VALLEY CURB DETAIL

SECTION VIEW
N.T.S.

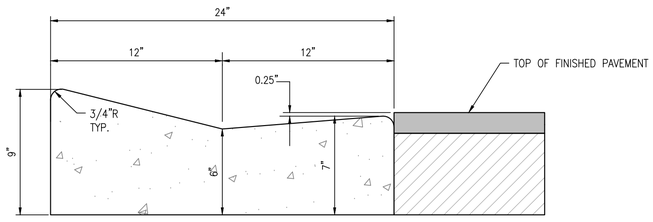

MIAMI CURB AND GUTTER DETAIL (TYPE "E" ALTERNATE)

SECTION VIEW
N.T.S.

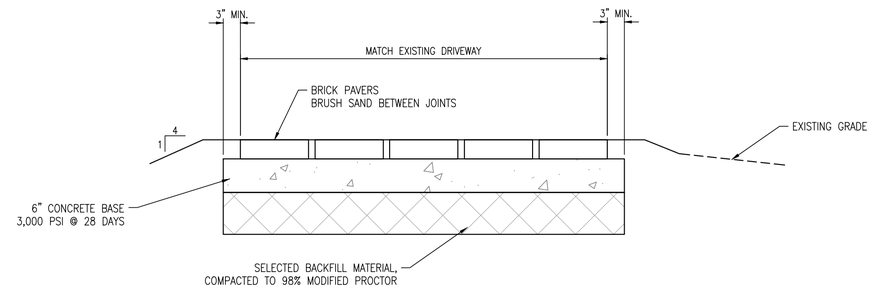

BRICK PAVER DRIVE DETAIL

SECTION VIEW
N.T.S.

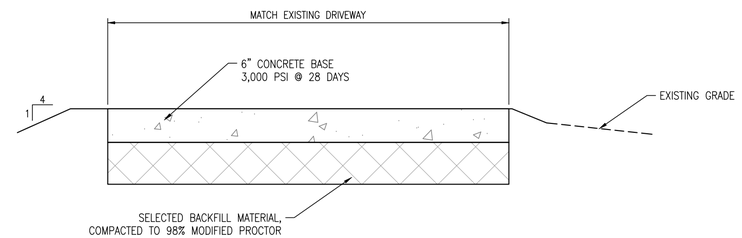

CONCRETE DRIVE DETAIL

SECTION VIEW
N.T.S.

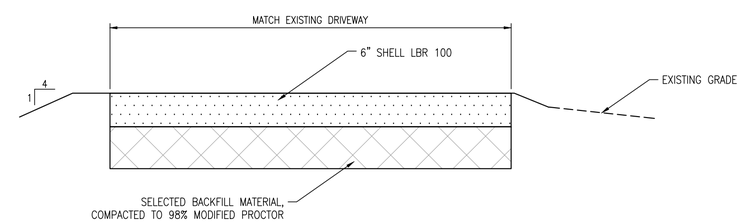

SHELL DRIVE DETAIL

SECTION VIEW
N.T.S.

10/16/2026 3:32:42 PM

NO.	DATE:	REVISION

INFRASTRUCTURE SOLUTION SERVICES
An HR Green Company

7319 Merchant Court
Sarasota, FL 34240
Phone: (941) 526-0813
FBPE CA# 29992

TOWN OF LONGBOAT KEY
PUBLIC WORKS DEPARTMENT
600 GENERAL HARRIS STREET
LONGBOAT KEY, FL 34228
PHONE (941) 316-1988

SLEEPY LAGOON
GENERAL HARRIS, PENFIELD, MARBURY

DRAWING TITLE: DETAILS			
PROJ. MGR.: DMB	DRWN. BY: WSH	CHKD. BY: MWM	PROJECT NO.: LBK003
SCALE: N.T.S.	DATE: 05/15/2026		SHEET NO.: 34 OF 56

Z:\Projects\Sarasota Region\Longboat Key, Town of\LBK003 – 2504561 – Sleepy Lagoon Gen Harris, Penfield, Marbury\Drawings\ISS DWG\2 Eng\Final Dwg\LBK003 – 11 – DETAILS.dwg

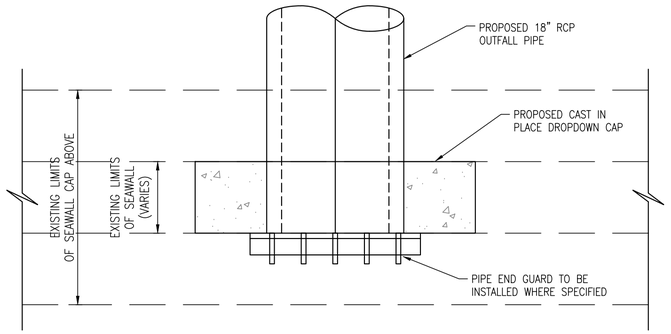

SEAWALL PIPE PENETRATION - PLAN

N.T.S.

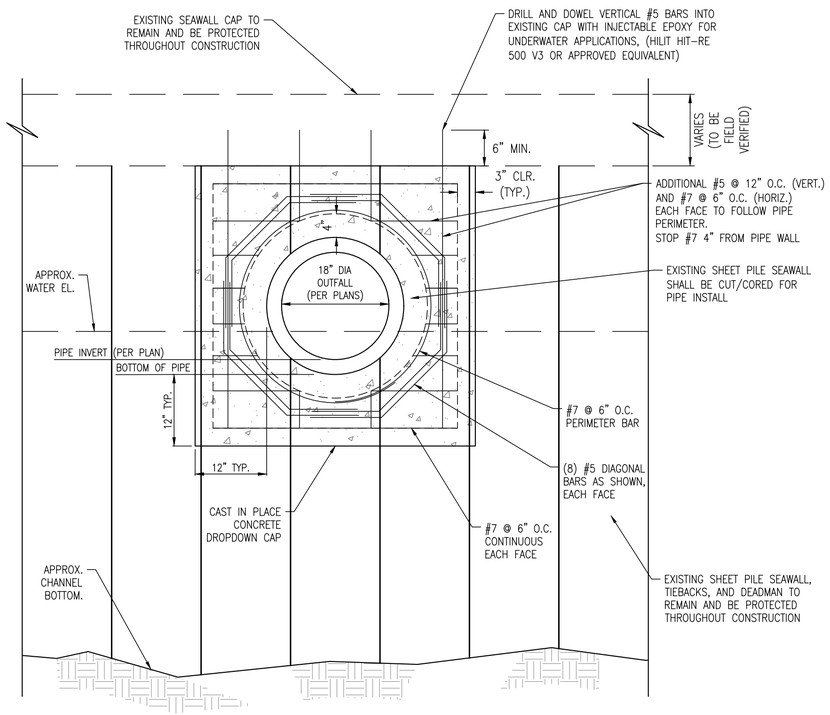

SEAWALL PIPE PENETRATION - ELEVATION

N.T.S.

NOTES:

1. ALL CONCRETE SHALL HAVE A MINIMUM 28-DAY COMPRESSIVE STRENGTH OF 4,000 PSI.
2. ALL CONCRETE SHALL BE PLACED IN THE DRY. DEWATERING MAY BE REQUIRED.
3. ALL REINFORCING STEEL SHALL BE MANUFACTURED IN ACCORDANCE WITH ASTM A615 WITH SUPPLEMENT, GRADE 60, MAX. WORKING STRESS OF 24,000 PSI.
4. CONTRACTOR SHALL PROTECT EXISTING SEAWALL, SEAWALL CAP, TIE RODS, AND DEADMAN.
5. COVER TO REINFORCING SHALL BE 3" U.O.N.
6. SEAWALL PIPE PENETRATION DETAIL IS PROVIDED FOR CONCEPTUAL INTENT. REFER TO DELEGATED DESIGN NOTES ON PLAN SHEET 3.
7. PIPE END GUARD TO BE INSTALLED FOR ALL PIPE OUTLETS WITHIN MANATEE PROTECTION ZONES.

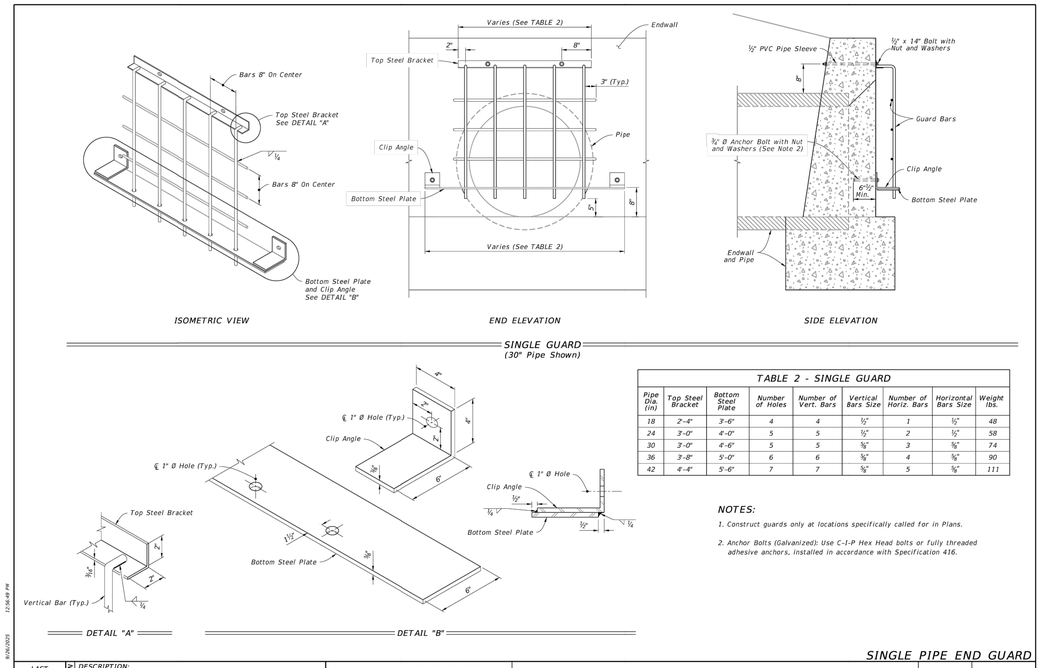

TABLE 2 - SINGLE GUARD

Pipe Dia. (in)	Top Steel Bracket	Bottom Steel Plate	Number of Holes	Number of Vert. Bars	Vertical Bars Size	Number of Horiz. Bars	Horizontal Bars Size	Weight lbs.
18	2'-4"	3'-6"	4	4	½"	1	½"	48
24	3'-0"	4'-0"	5	5	½"	2	½"	58
30	3'-0"	4'-6"	5	5	⅝"	3	⅝"	74
36	3'-8"	5'-0"	6	6	⅝"	4	⅝"	90
42	4'-4"	5'-6"	7	7	⅝"	5	⅝"	111

NOTES:

1. Construct guards only at locations specifically called for in Plans.
2. Anchor Bolts (Galvanized): Use C-I-P Hex Head bolts or fully threaded adhesive anchors, installed in accordance with Specification 416.

SINGLE PIPE END GUARD

LAST REVISION	DESCRIPTION:	FY 2026-27 STANDARD PLANS	MISCELLANEOUS DRAINAGE DETAILS	INDEX	SHEET
11/01/20				430-001	5 of 7

PIPE END GUARD DETAIL

N.T.S.

NOTES:

1. PIPE GUARD IS PURPOSED TO PROVIDE REQUIRED PROTECTION IN MANATEE PROTECTION ZONES IN ACCORDANCE WITH FLORIDA FISH AND WILDLIFE CONSERVATION COMMISSION REQUIREMENTS.
2. PIPE GUARD SHALL BE PROVIDED CONSISTENT WITH FDOT INDEX 430-001 AND MEET FDOT STANDARDS.
3. PREMANUFACTURED ASSEMBLIES MEETING THE REQUIREMENTS OF THE FDOT SPECIFICATIONS MAY BE USED; SUCH AS, BUT LIMITED TO, ENVIRO GUARD BY ENVIRONMENTAL COMPOSITES, OR APPROVED EQUIVALENT.

NO.	DATE:	REVISION

INFRASTRUCTURE SOLUTION SERVICES
An HR Green Company
7319 Merchant Court
Sarasota, FL 34240
Phone: (941) 526-0813
FBPE CA# 29992

TOWN OF LONGBOAT KEY
PUBLIC WORKS DEPARTMENT
600 GENERAL HARRIS STREET
LONGBOAT KEY, FL 34228
PHONE (941) 316-1988

SLEEPY LAGOON
GENERAL HARRIS, PENFIELD, MARBURY

DRAWING TITLE: DETAILS			
PROJ. MGR.: DMB	DRWN. BY: WSH	CHKD. BY: MWM	PROJECT NO.: LBK003
SCALE: N.T.S.	DATE: 05/15/2026		SHEET NO.: 35 OF 56

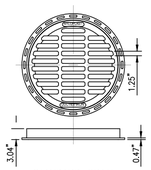

STANDARD GRATE

DIAMETER: GRATE = 24.75", FRAME = 28.5"
APPROX. DRAIN AREA = 194 SQ. IN.
APPROX. WEIGHT WITH FRAME = 124 LBS.

NOTE: STANDARD GRATE HAS H-25 HEAVY DUTY RATING. MATERIAL SHALL BE DUCTILE IRON AND SHALL CONFORM TO ASTM A536 GRADE 70-50-05. CASTINGS SHALL BE FURNISHED WITH A BLACK FINISH PER MANUFACTURER'S REQUIREMENTS.

STANDARD YARD DRAIN GRATE/COVER

(NYLOPLAST OR APPROVED EQUIVALENT) N.T.S.

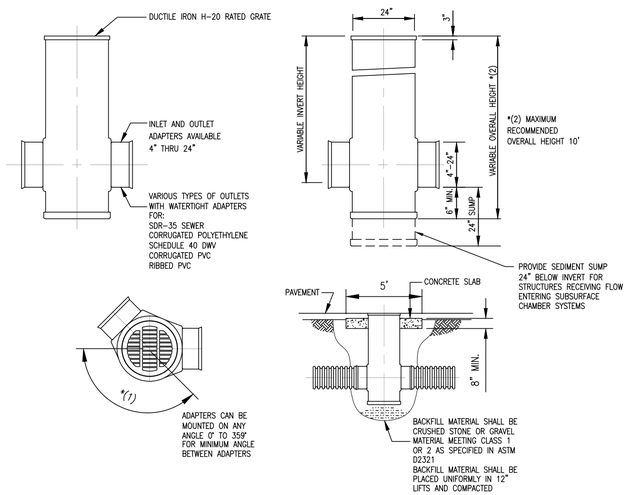

24" YARD DRAIN (DRAIN BASIN)

(NYLOPLAST OR APPROVED EQUIVALENT) N.T.S.

* FOR DRIVEWAYS THAT CAN DEMONSTRATE THE NEED FOR ADDITIONAL WIDTH, THE WIDTH MAY NOT BE GREATER THAN THE LESSER OF:

A) 30' TOTAL AT THE RIGHT-OF-WAY LINE.
B) 30% OF THE FRONT FOOTAGE AS DEFINED ON THE SURVEY (OR FIELD MEASUREMENTS, 36' MAX).

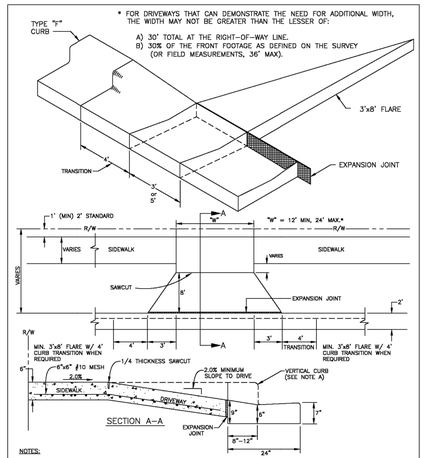

NOTES:

A. IF EXISTING CURB, REMOVE AND REPLACE WITH MIAMI CURB AND GUTTER. NO CHANGE WITH 3' VALLEY CROSSING.
B. IF EXISTING SIDEWALK, REMOVE AND REPLACE WITH 6" CONCRETE (3000 PSI AT 28 DAYS), WITH 6"x6" #10 MESH.
C. DRIVEWAY SHALL BE 6" CONCRETE (3000 PSI AT 28 DAYS) WITH 6"x6" #10 MESH.
D. EXPANSION JOINT SHALL BE 1/2" PREFORMED JOINT FILLER OR APPROVED ALTERNATE.
E. A MINIMUM 5' WIDE SIDEWALK IS REQUIRED ON LOCAL STREETS AND THOROUGHFARES. MIXED USE PATHS MAY REQUIRE 8'-12' WIDE SIDEWALKS PER LAND DEVELOPMENT CODE.
F. SAWCUT (1/4" THICKNESS MINIMUM) ON 10' CENTERS. IF DRIVE IS WIDER THAN 12', ADD JOINTS AT 10' CENTERS.

MANATEE COUNTY PUBLIC WORKS DEPARTMENT			
REV.BY	DATE	4/26/22 DATE OF B.O.C.C. APPROVAL	CURB CUT & TRANSITION W/ T-FLARE FOR RESIDENTIAL DRIVES	101.4

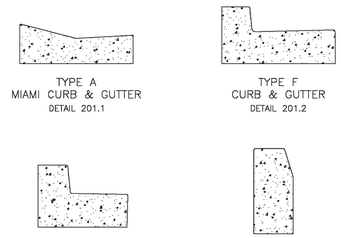

NOTES:

A. ALL CURB AND GUTTER SHALL HAVE A 1/8" TO 1/4" CONTRACTION JOINT AT 10' CENTERS.
B. ALL CURB AND GUTTER SHALL BE CONSTRUCTED IN COMPLIANCE WITH FDOT STANDARD PLANS, INDEX NO. 520-001, LATEST EDITION.
C. TOP OF FINISHED PAVEMENT SHALL BE 1/4" ABOVE LIP OF GUTTER ON THE LOW SIDE.

MANATEE COUNTY PUBLIC WORKS DEPARTMENT			
REV.BY	DATE	4/26/22 DATE OF APPROVAL	CURB & GUTTER CONTROL SHEET	201.0

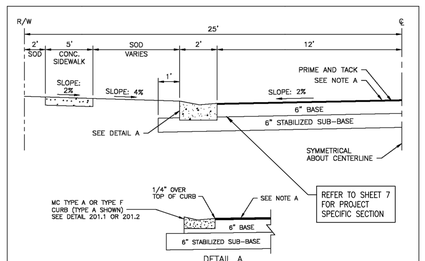

NOTES:

A. ASPHALTIC CONCRETE SURFACE COURSE SHALL BE 1-1/4" TYPE S-I OR SP EQUIVALENT (FIRST LIFT) AND 3/4" TYPE S-III OR SP EQUIVALENT (SECOND LIFT). TWO LIFTS OF ASPHALT SHALL BE REQUIRED. A PERFORMANCE BOND SHALL BE REQUIRED IF THE SECOND LIFT IS DELAYED BEYOND INITIAL ROAD ACCEPTANCE.
B. BASE SHALL BE 6" LIMEROCK, LBR 100 PER FDOT STANDARD SPECIFICATIONS, SECTION 285, LATEST EDITION. OTHER BASE MATERIALS FOR OPTIONAL BASE GROUP 4 PER FDOT STANDARD SPECIFICATIONS, SECTION 285, LATEST EDITION MAY BE USED WITH PRIOR APPROVAL BY THE DEPARTMENT DIRECTOR OR DESIGNEE.
C. 6" STABILIZED SUB-BASE SHALL BE PER FDOT STANDARD SPECIFICATIONS, SECTIONS 160 AND 914, LATEST EDITION.
D. LABORATORY TESTS ARE REQUIRED TO SUBSTANTIATE STRUCTURAL SECTION DESIGN. SPECIFICATIONS SHOWN ON THIS SHEET ARE MINIMUM REQUIREMENTS.
E. NO PORTION OF THE DRAINAGE PIPE SHALL BE ALLOWED IN THE SUB-BASE.
F. SUBSOIL INVESTIGATION REPORT ALONG WITH BORINGS SHALL BE REQUIRED.
G. UNDERDRAIN MAY BE REQUIRED IF DEEMED NECESSARY. SEE MANATEE COUNTY PUBLIC WORKS STANDARDS SECTION 3.3.3 UNDERDRAIN.

MANATEE COUNTY PUBLIC WORKS DEPARTMENT			
REV.BY	DATE	4/26/22 DATE OF B.O.C.C. APPROVAL	TYPICAL LOCAL URBAN RESIDENTIAL	401.9

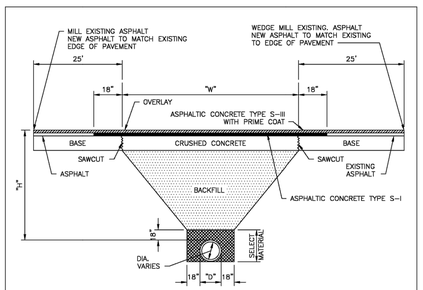

A. CRUSHED CONCRETE BASE SHALL BE A MINIMUM OF 8" OR MATCH EXISTING, WHICH EVER IS GREATER. AND A MINIMUM OF "W" IN WIDTH, OR GREATER, WHERE DISTURBED AREA IS GREATER THAN "W" FROM EQUATION: "W"=(2 X "H") + "D" + (2 X 18"). ASPHALTIC BASE COURSE III WILL BE AN ACCEPTABLE ALTERNATE.
B. BACKFILL, AASHTO M145-66 SHALL BE PLACED IN LAYERS NOT TO EXCEED 6", EACH LAYER WILL BE THOROUGHLY TAMPED AND/OR ROLLED TO 98% OF MODIFIED PROCTOR MAXIMUM DENSITY (AASHTO T-180). NON-SHRINK, HIGH SLUMP, 1,500 PSI CONCRETE. BACKFILL MAY BE USED AS AN ALTERNATIVE IF APPROVED BY MANATEE COUNTY TRANSPORTATION DEPARTMENT.
C. SELECT MATERAL, AASHTO M-146-70, SHALL MEET FDOT CURRENT STANDARD SPECIFICATIONS AND BE PLACED ON BOTH SIDES OF THE PIPE SIMUTANEOUSLY, COMPACT AREA UNDER HAUNCHES OF THE PIPE W/ MECHANICAL TAMPERS, AND THROUGHOUT THE REMAINDER OF THE SELECT MATERIAL.
D. ASPHALTIC CONCRETE STRUCTURAL COURSE, SHALL BE THE SAME DEPTH AND TYPE AS EXISTING OR A MINIMUM OF 1 1/4", WHICHEVER IS GREATER.
E. "H" = THE DEPTH FROM TOP OF PIPE TO THE CENTERLINE OF THE ROAD (MINIMUM OF 36") MINIMUM OF 30" UNDER FLOWLINE OF SIDE DITCHES.
F. RESTORE EXISTING SIGNAGE & MARKING WITH THERMOPLASTIC PER FDOT STANDARDS, LATEST EDITION.
G. OVERLAY LIMITS AT DESCRETION OF PAVEMENT MANAGER.

MANATEE COUNTY PUBLIC WORKS DEPARTMENT			
REV.BY	DATE	4/26/22 DATE OF B.O.C.C. APPROVAL	UTILITY ROAD CUT REPLACEMENT	403.2

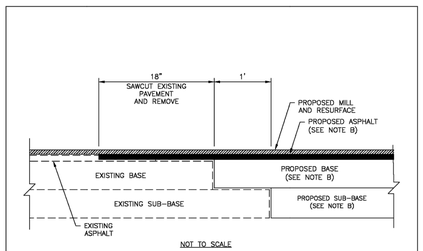

NOT TO SCALE

NOTES:

A. LIMITS OF MILL AND RESURFACE - EDGE OF PAVEMENT TO EDGE OF PAVEMENT AND 25' BEYOND LIMITS OF CONSTRUCTION.
B. ASPHALT, BASE, AND SUB-BASE SHALL MATCH EXISTING THICKNESS OR THE APPLICABLE COUNTY STANDARD TYPICAL SECTION, WHICHEVER IS GREATER.
C. SIGNAGE AND MARKING PLAN SHALL ACCOMPANY CONSTRUCTION PLAN.

MANATEE COUNTY PUBLIC WORKS DEPARTMENT			
REV.BY	DATE	4/26/22 DATE OF B.O.C.C. APPROVAL	ROAD CONNECTION DETAIL	403.3

NO.	DATE:	REVISION

INFRASTRUCTURE SOLUTION SERVICES
An HR Green Company
7319 Merchant Court
Sarasota, FL 34240
Phone: (941) 526-0813
FBPE CA# 29992

TOWN OF LONGBOAT KEY
PUBLIC WORKS DEPARTMENT
600 GENERAL HARRIS STREET
LONGBOAT KEY, FL 34228
PHONE (941) 316-1988

SLEEPY LAGOON
GENERAL HARRIS, PENFIELD, MARBURY

DRAWING TITLE: DETAILS			
PROJ. MGR.: DMB	DRWN. BY: WSH	CHKD. BY: MWM	PROJECT NO.: LBK003
SCALE: N.T.S.	DATE: 05/15/2026		SHEET NO.: 36 OF 56

10/8/2026 3:26:13 PM

Z:\Projects\Sarasota Region\Longboat Key, Town of\LBK003 - 2504561 - Sleepy Lagoon Gen Harris, Penfield, Marbury\Drawings\ISS DWG\2 Eng\Final Dwg\LBK003 - 11 - DETAILS.dwg

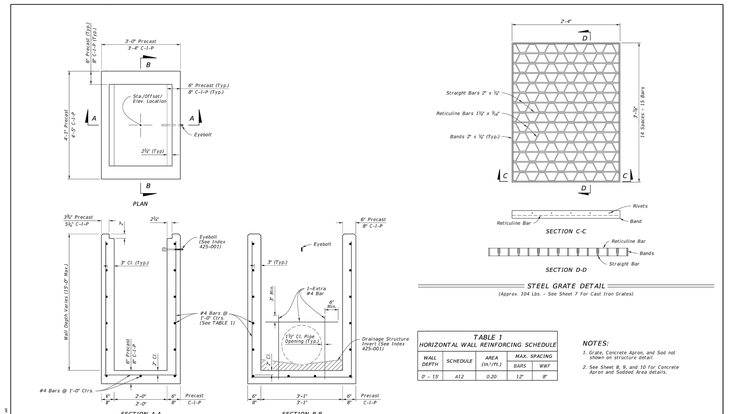

STEEL GRATE DETAIL
(Approx. 104 Lbs. - See Sheet 7 For Cast Iron Grates)

TABLE 1
HORIZONTAL WALL REINFORCING SCHEDULE

WALL DEPTH	SCHEDULE	AREA (in²/ft.)	MAX. SPACING BARS	MAX. SPACING WWF
0' - 15'	A12	0.20	12"	8"

NOTES:
1. Grate, Concrete Apron, and Sod not shown on structure detail.
2. See Sheet 6, 9, and 10 For Concrete Apron and Sodded Area details.

DIMENSIONAL AND REINFORCING DETAILS

TYPE C - DIMENSIONAL, REINFORCING, AND STEEL GRATE DETAILS

LAST REVISION	DESCRIPTION:	FDOT STANDARD PLANS	DITCH BOTTOM INLET TYPES C, D, E, AND H	INDEX 425-052	SHEET 2 of 14
11/01/20		FY 2025-26			

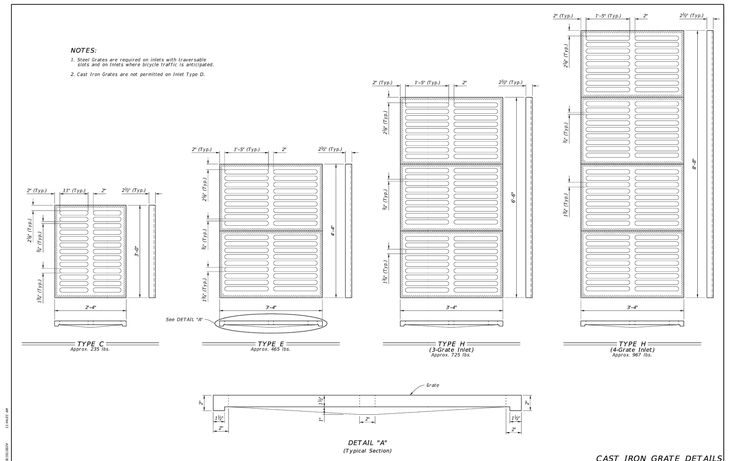

CAST IRON GRATE DETAILS

LAST REVISION	DESCRIPTION:	FDOT STANDARD PLANS	DITCH BOTTOM INLET TYPES C, D, E, AND H	INDEX 425-052	SHEET 7 of 14
11/01/20		FY 2025-26			

Configurations and Custom Designs

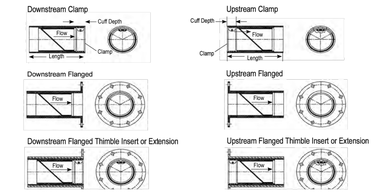

CheckMate® can be made for any pipe I.D.
Built to fit in sizes from 3-72" (75-1800mm).

Flange shape and bolt pattern can be customized.
Flangeless thimble inserts are available.

	NOMINAL PIPE SIZE I.D.		OVERALL LENGTH*		NUMBER OF CLAMPS	CUFF DEPTH		BACK PRESSURE RATING**		WEIGHT***	
	Inches	Millimeters	Inches	Millimeters		Inches	Millimeters	Feet	Meters	lbs	Kg
Cast Iron	3	75	5.1	130	1	1.5	38	10	3.0	0.7	0.3
	4	100	7.9	201	1	**1.5**	38	10	3.0	1.5	0.7
Standard Pressure	4	100	7.9	201	1	1.5	38	85	26.0	3	1.5
	5	125	9.5	241	1	1.5	38	83	25.3	4	2
	6	150	11.0	279	1	2.0	51	83	25.3	9	4
	7	175	12.8	325	1	2.0	51	79	24.1	11	5
	8	200	15.2	386	1	2.0	51	79	24.1	13	6
	9	225	15.4	391	1	2.0	51	75	22.9	17	8
	10	250	16.1	409	1	2.0	51	71	21.6	20	10
	12	300	19.8	503	1	2.0	51	68	20.1	37	17
	14	350	25.8	655	1	4.0	102	64	20.0	110	50
	15	381	25.8	655	1	4.0	102	62	18.9	120	55
	16	400	28.6	726	1	4.0	102	60	18.3	133	52
	18	450	31.0	787	1	4.0	102	56	17.1	143	65
	20	500	42.1	1069	2	8.0	203	53	16.2	223	102
	24	600	47.5	1207	2	8.0	203	45	13.7	304	137
	26	650	50.0	1270	2	8.0	203	42	12.8	370	168
	28	700	52.0	1321	2	8.0	203	40	12.2	434	197
	30	750	54.9	1395	2	8.0	203	38	11.6	500	227
	36	900	62.3	1582	2	8.0	203	30	9.1	828	376
	42	1050	70.6	1793	2	8.0	203	28	8.5	1423	646
	48	1200	79.0	2007	2	8.0	203	26	7.9	1801	817
	54	1350	86.4	2195	2	8.0	203	20	6.1	2700	1225
	60	1500	96.8	2459	2	9.0	229	18	5.5	3315	1504
	72	1800	119.0	3023	3	12.0	305	15	4.6	6100	2767

*Shorter lengths available.

**Back pressure measured from pipe invert.
Higher back pressure ratings available. Consult factory.
***Weights are approximate and do not include crating.

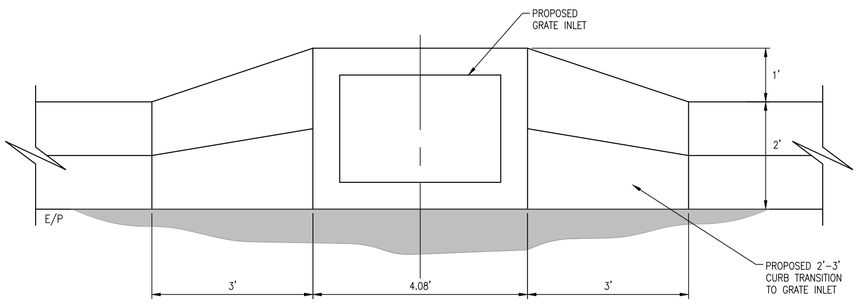

GRATE INLET AT MIAMI CURB & GUTTER

NOTE:

1. ALL CONCRETE SHALL HAVE A COMPRESSIVE STRENGTH OF AT LEAST 4000 P.S.I. @ 28 DAYS.
2. REINFORCING SHOWN IS THE MINIMUM REQUIRED. IF DIMENSIONS OF BOX REQUIRES ADDITIONAL REINFORCING, IN ORDER TO CARRY DESIGN LOADS, MANUFACTURER SHALL PROVIDE ADDITIONAL REINFORCING AS REQUIRED.
3. ALL REINFORCEMENT NO. 6 BARS EXCEPT 6– #8 BARS SHOWN. BARS SPACED @ 6" CENTERS BOTH WAYS EXCEPT MIDDLE BARS @ 7" CENTERS. ALL BARS WITH ACI STANDARD HOOKS CANTED APPROX. 45°, OR EMBEDDED IN ACCORDANCE WITH THE SLAB REINFORCEMENT DETAIL SHOWN UNDER OPTIONAL CONSTRUCTION JOINTS. IN ACCORDANCE WITH SUPPLEMENTAL DETAILS, FDOT INDEX 201. EXCEPT ALL # 8 BARS AND # 6 BARS AROUND MANHOLE OPENING SHALL BE HOOKED.

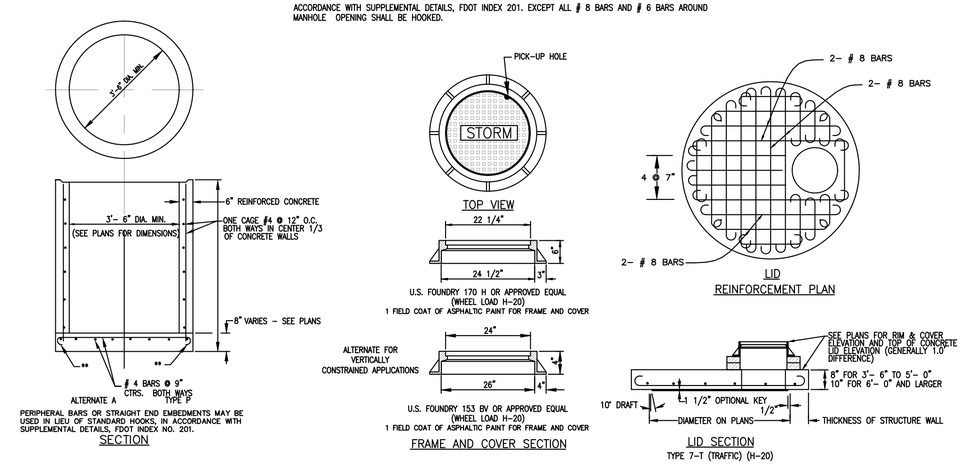

STANDARD JUNCTION BOX

N.T.S.

NO.	DATE:	REVISION

10/8/2026 3:28:53 PM

INFRASTRUCTURE SOLUTION SERVICES
An HR Green Company
7319 Merchant Court
Sarasota, FL 34240
Phone: (941) 526-0813
FBPE CA# 29992

TOWN OF LONGBOAT KEY
PUBLIC WORKS DEPARTMENT
600 GENERAL HARRIS STREET
LONGBOAT KEY, FL 34228
PHONE (941) 316-1988

SLEEPY LAGOON
GENERAL HARRIS, PENFIELD, MARBURY

DRAWING TITLE: DETAILS			
PROJ. MGR.: DMB	DRWN. BY: WSH	CHKD. BY: MWM	PROJECT NO.: LBK003
SCALE: N.T.S.	DATE: 05/15/2026		SHEET NO.: 37 OF 56

Z:\Projects\Sarasota Region\Longboat Key, Town of\LBK003 – 2504561 – Sleepy Lagoon Gen Harris, Penfield, Marbury\Drawings\ISS DWG\2 Eng\Final Dwg\LBK003 – 11 – DETAILS.dwg

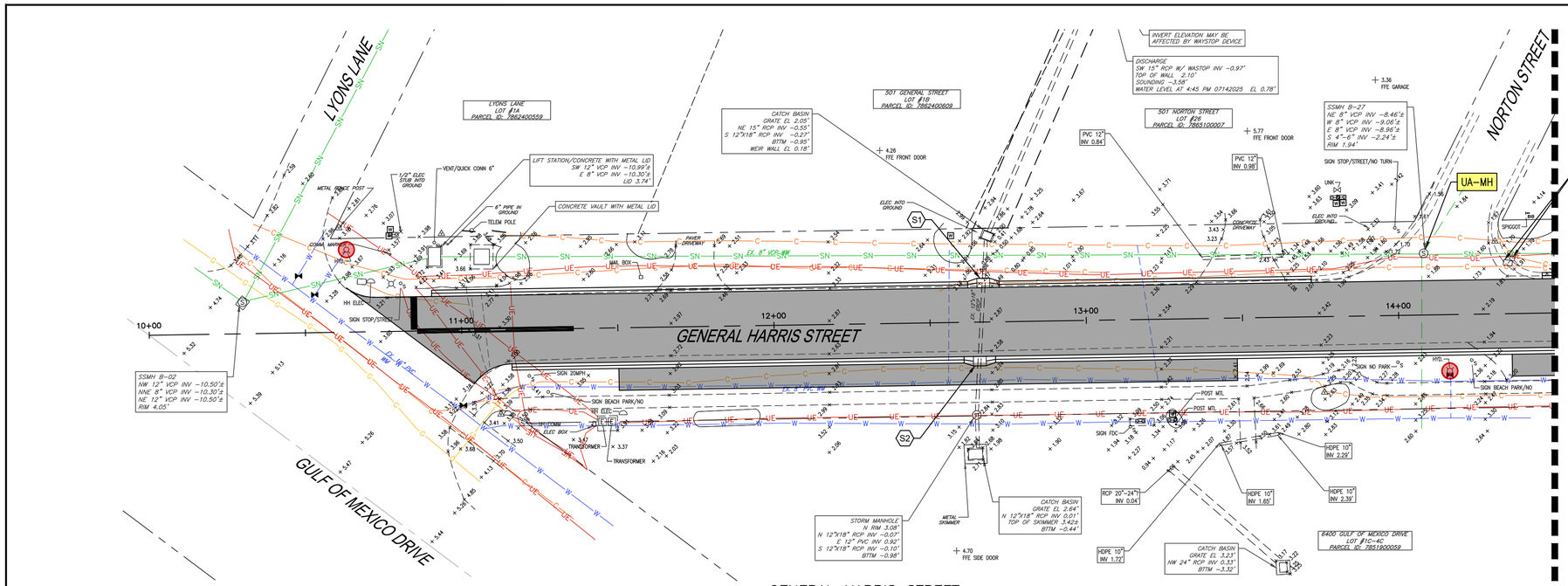

GENERAL HARRIS STREET

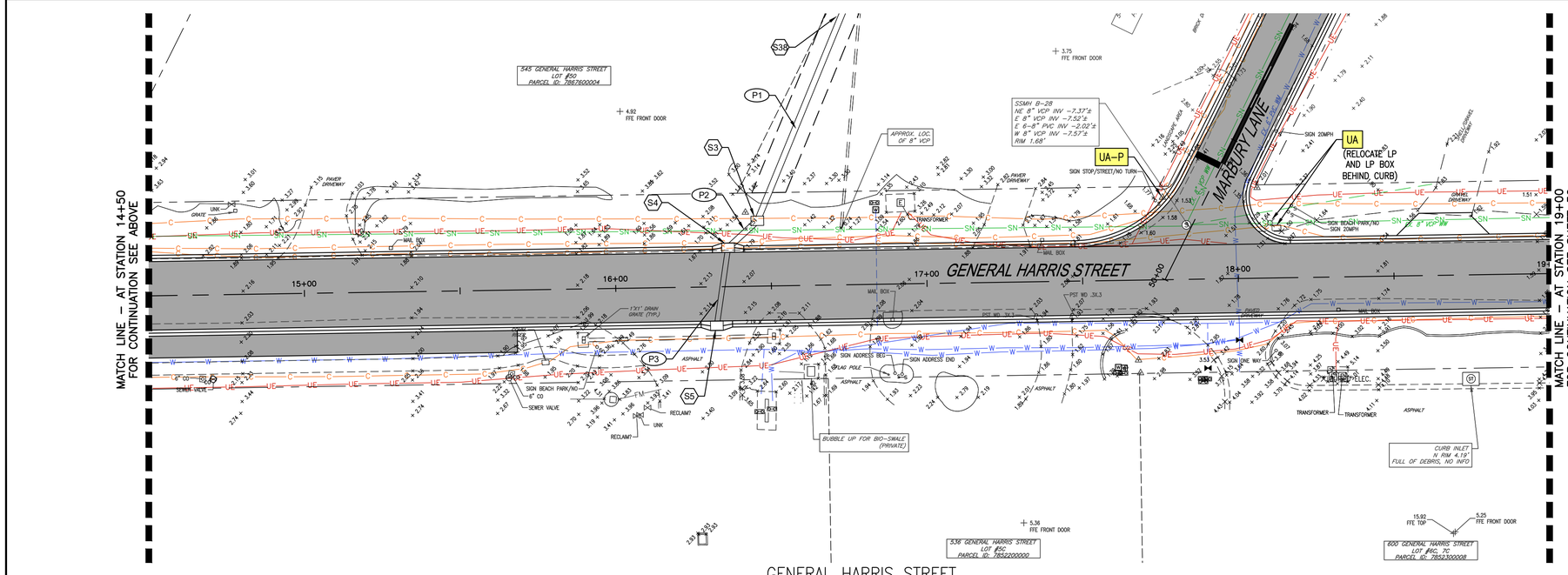

GENERAL HARRIS STREET

GRAPHIC SCALE

0 20 30 40

1"=20'

LEGEND

- EXISTING FIRE HYDRANT
- EXISTING WATER MAIN/SERVICE
- EXISTING WASTEWATER MAIN/SERVICE
- EXISTING GAS LINE
- EXISTING COMMUNICATIONS LINE
- EXISTING ELECTRIC LINE
- PROPOSED STORM STRUCTURE AND STORM PIPE

KEYNOTES

UA	PROPOSED UTILITY ADJUSTMENT (AS DESCRIBED)
UA–W	PROPOSED UTILITY ADJUSTMENT – WATER METER / BFP
UA–P	PROPOSED UTILITY ADJUSTMENT – PEDESTAL / HANDHOLE
UA–MH	PROPOSED MANHOLE LID ADJUSTMENT TO MATCH PROPOSED GRADE

GRAPHIC SCALE

0 20 30 40

1"=20'

LEGEND

- EXISTING FIRE HYDRANT
- EXISTING WATER MAIN/SERVICE
- EXISTING WASTEWATER MAIN/SERVICE
- EXISTING GAS LINE
- EXISTING COMMUNICATIONS LINE
- EXISTING ELECTRIC LINE
- PROPOSED STORM STRUCTURE AND STORM PIPE

KEYNOTES

UA	PROPOSED UTILITY ADJUSTMENT (AS DESCRIBED)
UA–W	PROPOSED UTILITY ADJUSTMENT – WATER METER / BFP
UA–P	PROPOSED UTILITY ADJUSTMENT – PEDESTAL / HANDHOLE
UA–MH	PROPOSED MANHOLE LID ADJUSTMENT TO MATCH PROPOSED GRADE

NO.	DATE:	REVISION

INFRASTRUCTURE SOLUTION SERVICES
An HR Green Company

7319 Merchant Court
Sarasota, FL 34240
Phone: (941) 526-0813
FBPE CA# 29992

TOWN OF LONGBOAT KEY
PUBLIC WORKS DEPARTMENT
600 GENERAL HARRIS STREET
LONGBOAT KEY, FL 34228
PHONE (941) 316-1988

SLEEPY LAGOON
GENERAL HARRIS, PENFIELD, MARBURY

DRAWING TITLE: **UTILITY ADJUSTMENT PLAN**

PROJ. MGR.:	DRWN. BY:	CHKD. BY:	PROJECT NO.:
DMB	WSH	MWM	LBK003
SCALE: 1" = 20'	DATE: 05/15/2026		SHEET NO.: 38 OF 56

10/8/2026 3:28:30 PM

Z:\Projects\Sarasota Region\Longboat Key, Town of\LBK003 – 2504561 – Sleepy Lagoon Gen Harris, Penfield, Marbury\Drawings\ISS DWG\2 Eng\Final Dwg\LBK003 – 12 – UTIL_ADJUST_PLAN.dwg

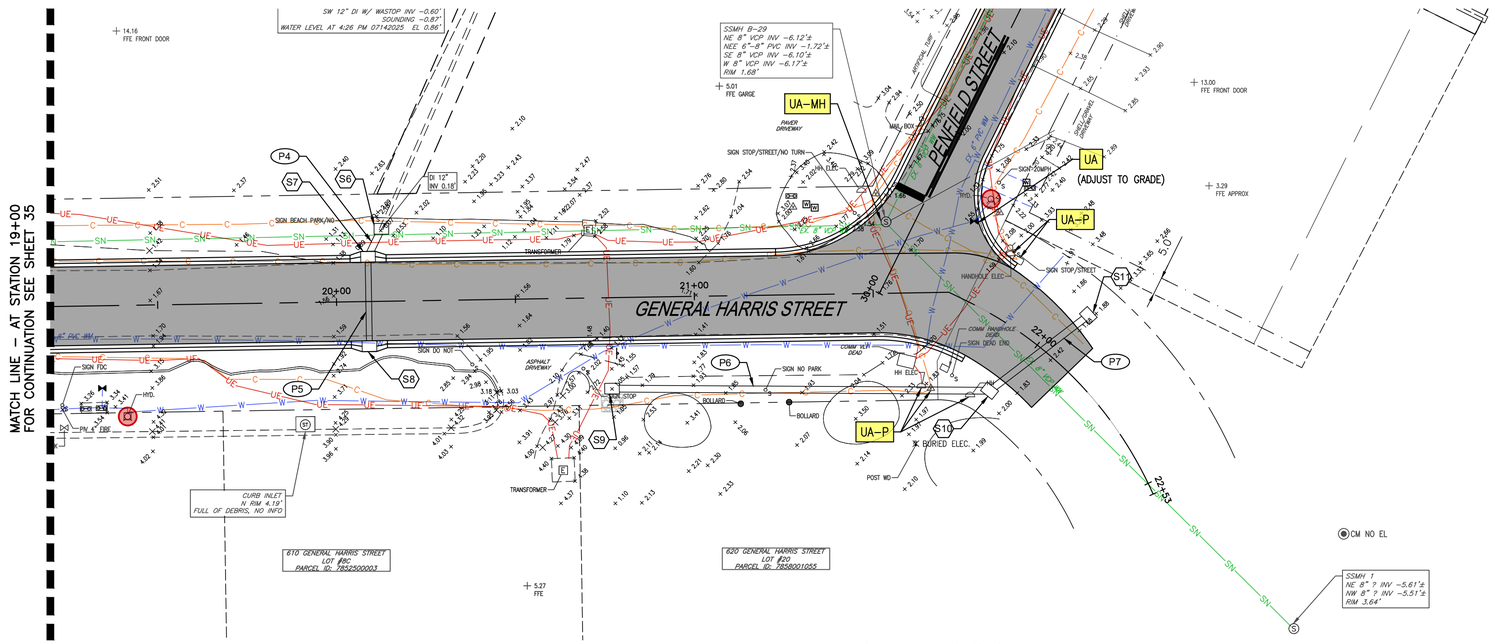

GENERAL HARRIS STREET

GRAPHIC SCALE

0 20 30 40

1"=20'

LEGEND

- EXISTING FIRE HYDRANT
- EXISTING WATER MAIN/SERVICE
- EXISTING WASTEWATER MAIN/SERVICE
- EXISTING GAS LINE
- EXISTING COMMUNICATIONS LINE
- EXISTING ELECTRIC LINE
- PROPOSED STORM STRUCTURE AND STORM PIPE

KEYNOTES

UA	PROPOSED UTILITY ADJUSTMENT (AS DESCRIBED)
UA-W	PROPOSED UTILITY ADJUSTMENT – WATER METER / BFP
UA-P	PROPOSED UTILITY ADJUSTMENT – PEDESTAL / HANDHOLE
UA-MH	PROPOSED MANHOLE LID ADJUSTMENT TO MATCH PROPOSED GRADE

10/8/2026 3:34:43 PM

NO.	DATE:	REVISION

INFRASTRUCTURE SOLUTION SERVICES
An HR Green Company

7319 Merchant Court
Sarasota, FL 34240
Phone: (941) 526-0813
FBPE CA# 29992

TOWN OF LONGBOAT KEY
PUBLIC WORKS DEPARTMENT
600 GENERAL HARRIS STREET
LONGBOAT KEY, FL 34228
PHONE (941) 316-1988

SLEEPY LAGOON
GENERAL HARRIS, PENFIELD, MARBURY

DRAWING TITLE: **UTILITY ADJUSTMENT PLAN**

PROJ. MGR.:	DRWN. BY:	CHKD. BY:	PROJECT NO.:
DMB	WSH	MWM	LBK003
SCALE: 1" = 20'	DATE: 05/15/2026		SHEET NO.: 39 OF 56

Z:\Projects\Sarasota Region\Longboat Key, Town of\LBK003 – 2504561 – Sleepy Lagoon Gen Harris, Penfield, Marbury\Drawings\ISS DWG\2 Eng\Final Dwg\LBK003 – 12 – UTIL_ADJUST_PLAN.dwg

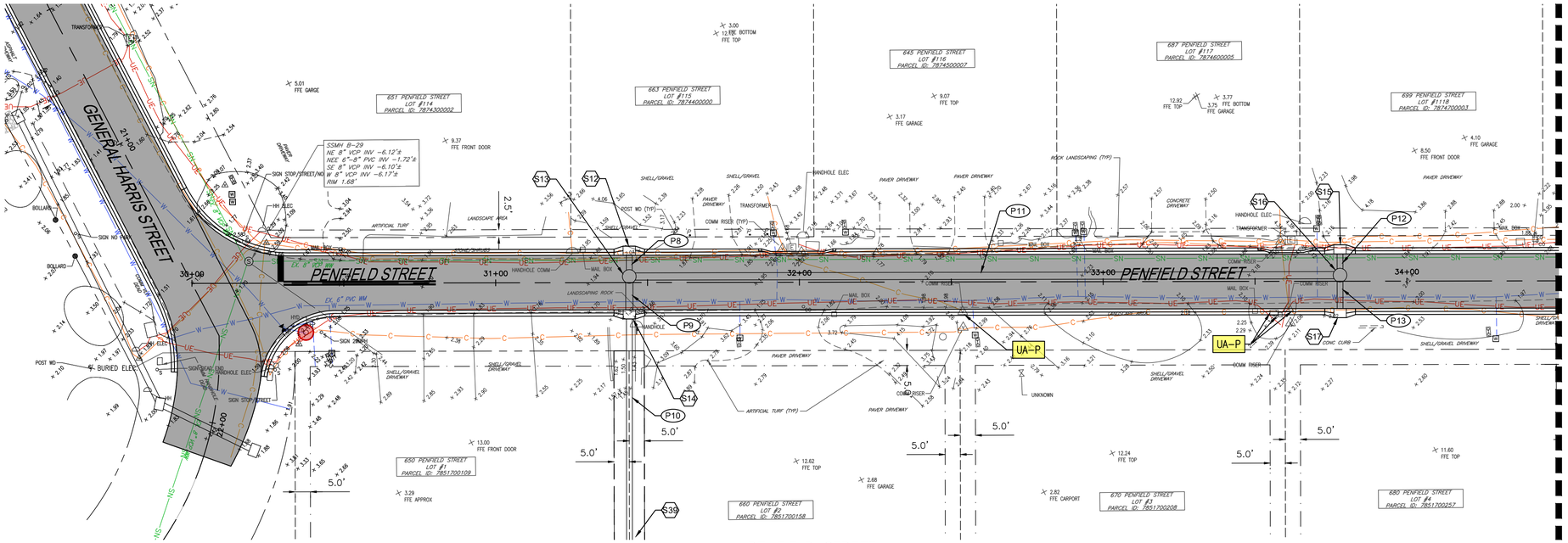

PENFIELD STREET

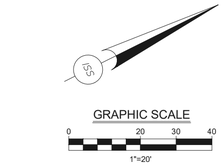

LEGEND

- EXISTING FIRE HYDRANT
- EXISTING WATER MAIN/SERVICE
- EXISTING WASTEWATER MAIN/SERVICE
- EXISTING GAS LINE
- EXISTING COMMUNICATIONS LINE
- EXISTING ELECTRIC LINE
- PROPOSED STORM STRUCTURE AND STORM PIPE

KEYNOTES

- UA — PROPOSED UTILITY ADJUSTMENT (AS DESCRIBED)
- UA-W — PROPOSED UTILITY ADJUSTMENT – WATER METER / BFP
- UA-P — PROPOSED UTILITY ADJUSTMENT – PEDESTAL / HANDHOLE
- UA-MH — PROPOSED MANHOLE LID ADJUSTMENT TO MATCH PROPOSED GRADE

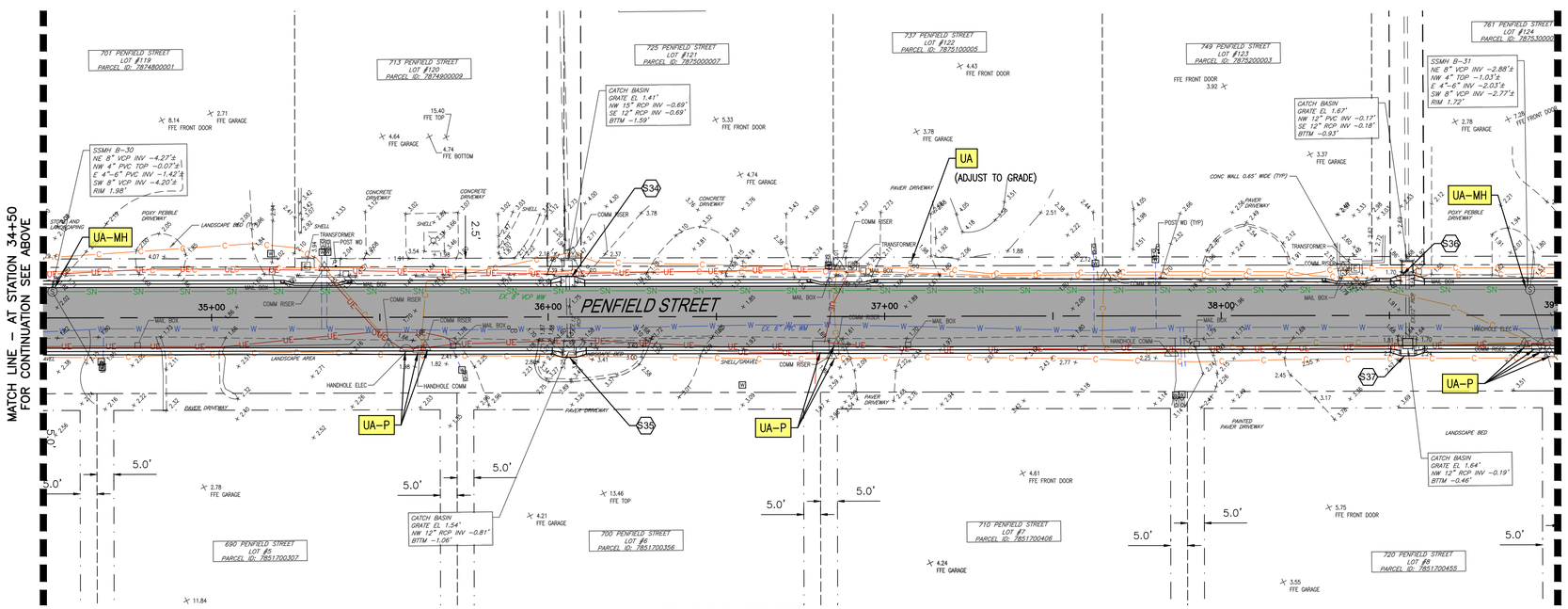

PENFIELD STREET

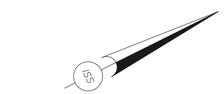

LEGEND

- EXISTING FIRE HYDRANT
- EXISTING WATER MAIN/SERVICE
- EXISTING WASTEWATER MAIN/SERVICE
- EXISTING GAS LINE
- EXISTING COMMUNICATIONS LINE
- EXISTING ELECTRIC LINE
- PROPOSED STORM STRUCTURE AND STORM PIPE

KEYNOTES

- UA — PROPOSED UTILITY ADJUSTMENT (AS DESCRIBED)
- UA-W — PROPOSED UTILITY ADJUSTMENT – WATER METER / BFP
- UA-P — PROPOSED UTILITY ADJUSTMENT – PEDESTAL / HANDHOLE
- UA-MH — PROPOSED MANHOLE LID ADJUSTMENT TO MATCH PROPOSED GRADE

NO.	DATE:	REVISION

10/8/2026 3:33:15 PM

INFRASTRUCTURE SOLUTION SERVICES
An HR Green Company
7319 Merchant Court
Sarasota, FL 34240
Phone: (941) 526-0813
FBPE CA# 29992

TOWN OF LONGBOAT KEY
PUBLIC WORKS DEPARTMENT
600 GENERAL HARRIS STREET
LONGBOAT KEY, FL 34228
PHONE (941) 316-1988

SLEEPY LAGOON
GENERAL HARRIS, PENFIELD, MARBURY

DRAWING TITLE: **UTILITY ADJUSTMENT PLAN**

PROJ. MGR.:	DRWN. BY:	CHKD. BY:	PROJECT NO.:
DMB	WSH	MWM	LBK003
SCALE: 1" = 20'	DATE: 05/15/2026		SHEET NO.: 40 OF 56

Z:\Projects\Sarasota Region\Longboat Key, Town of\LBK003 – 2504561 – Sleepy Lagoon Gen Harris, Penfield, Marbury\Drawings\ISS DWG\2 Eng\Final Dwg\LBK003 – 12 – UTIL_ADJUST_PLAN.dwg

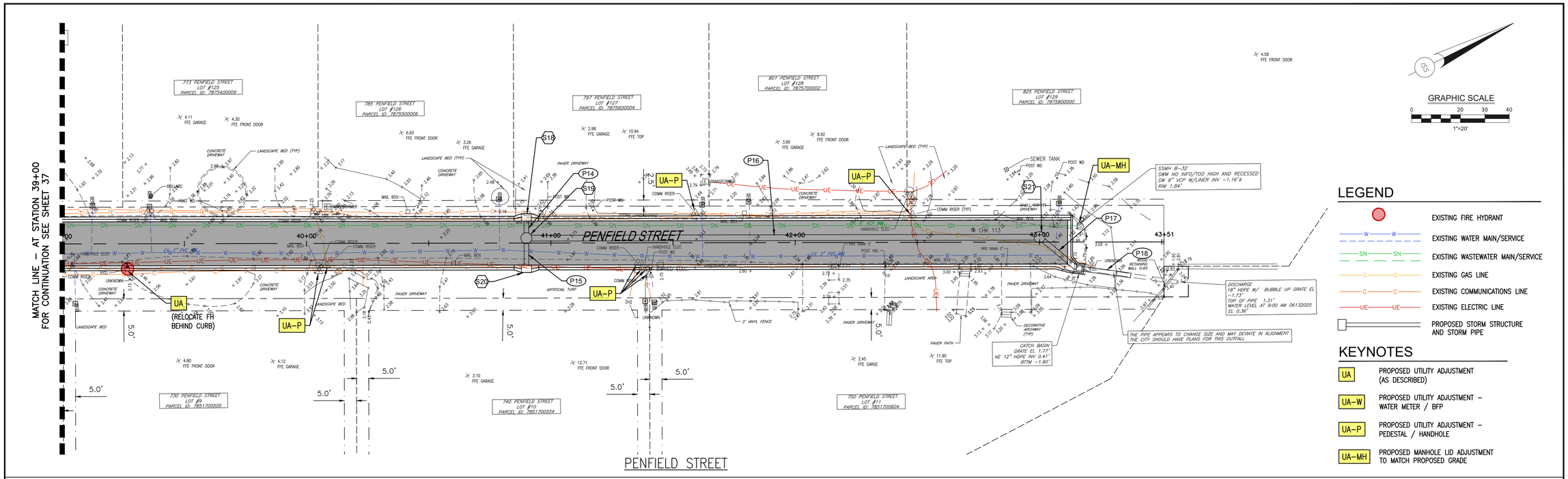

PENFIELD STREET

LEGEND

- EXISTING FIRE HYDRANT
- EXISTING WATER MAIN/SERVICE
- EXISTING WASTEWATER MAIN/SERVICE
- EXISTING GAS LINE
- EXISTING COMMUNICATIONS LINE
- EXISTING ELECTRIC LINE
- PROPOSED STORM STRUCTURE AND STORM PIPE

KEYNOTES

- UA — PROPOSED UTILITY ADJUSTMENT (AS DESCRIBED)
- UA–W — PROPOSED UTILITY ADJUSTMENT – WATER METER / BFP
- UA–P — PROPOSED UTILITY ADJUSTMENT – PEDESTAL / HANDHOLE
- UA–MH — PROPOSED MANHOLE LID ADJUSTMENT TO MATCH PROPOSED GRADE

10/8/2026 3:30:02 PM

NO.	DATE:	REVISION

INFRASTRUCTURE SOLUTION SERVICES
An HR Green Company
7319 Merchant Court
Sarasota, FL 34240
Phone: (941) 526-0813
FBPE CA# 29992

TOWN OF LONGBOAT KEY
PUBLIC WORKS DEPARTMENT
600 GENERAL HARRIS STREET
LONGBOAT KEY, FL 34228
PHONE (941) 316-1988

SLEEPY LAGOON
GENERAL HARRIS, PENFIELD, MARBURY

DRAWING TITLE: **UTILITY ADJUSTMENT PLAN**

PROJ. MGR.:	DRWN. BY:	CHKD. BY:	PROJECT NO.:
DMB	WSH	MWM	LBK003
SCALE: 1" = 20'	DATE: 05/15/2026		SHEET NO.: 41 OF 56

Z:\Projects\Sarasota Region\Longboat Key, Town of\LBK003 – 2504561 – Sleepy Lagoon Gen Harris, Penfield, Marbury\Drawings\ISS DWG\2 Eng\Final Dwg\LBK003 – 12 – UTIL_ADJUST_PLAN.dwg

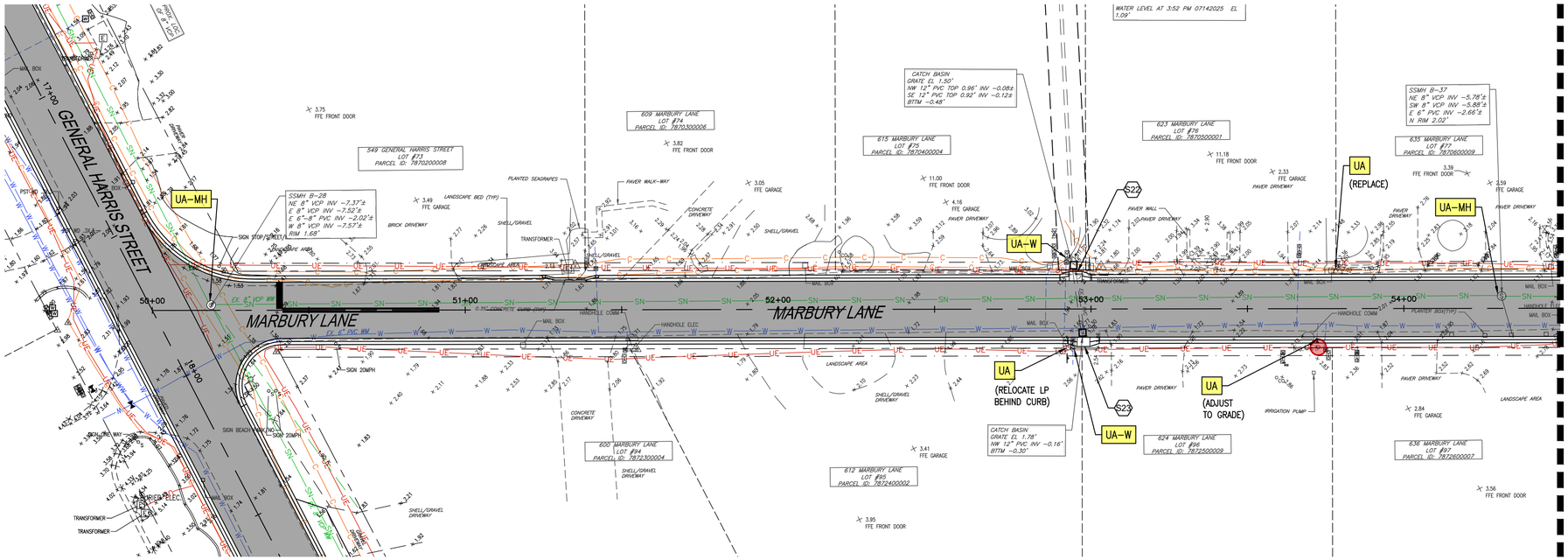

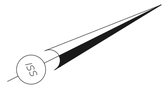

LEGEND

- EXISTING FIRE HYDRANT
- EXISTING WATER MAIN/SERVICE
- EXISTING WASTEWATER MAIN/SERVICE
- EXISTING GAS LINE
- EXISTING COMMUNICATIONS LINE
- EXISTING ELECTRIC LINE
- PROPOSED STORM STRUCTURE AND STORM PIPE

KEYNOTES

- UA — PROPOSED UTILITY ADJUSTMENT (AS DESCRIBED)
- UA–W — PROPOSED UTILITY ADJUSTMENT – WATER METER / BFP
- UA–P — PROPOSED UTILITY ADJUSTMENT – PEDESTAL / HANDHOLE
- UA–MH — PROPOSED MANHOLE LID ADJUSTMENT TO MATCH PROPOSED GRADE

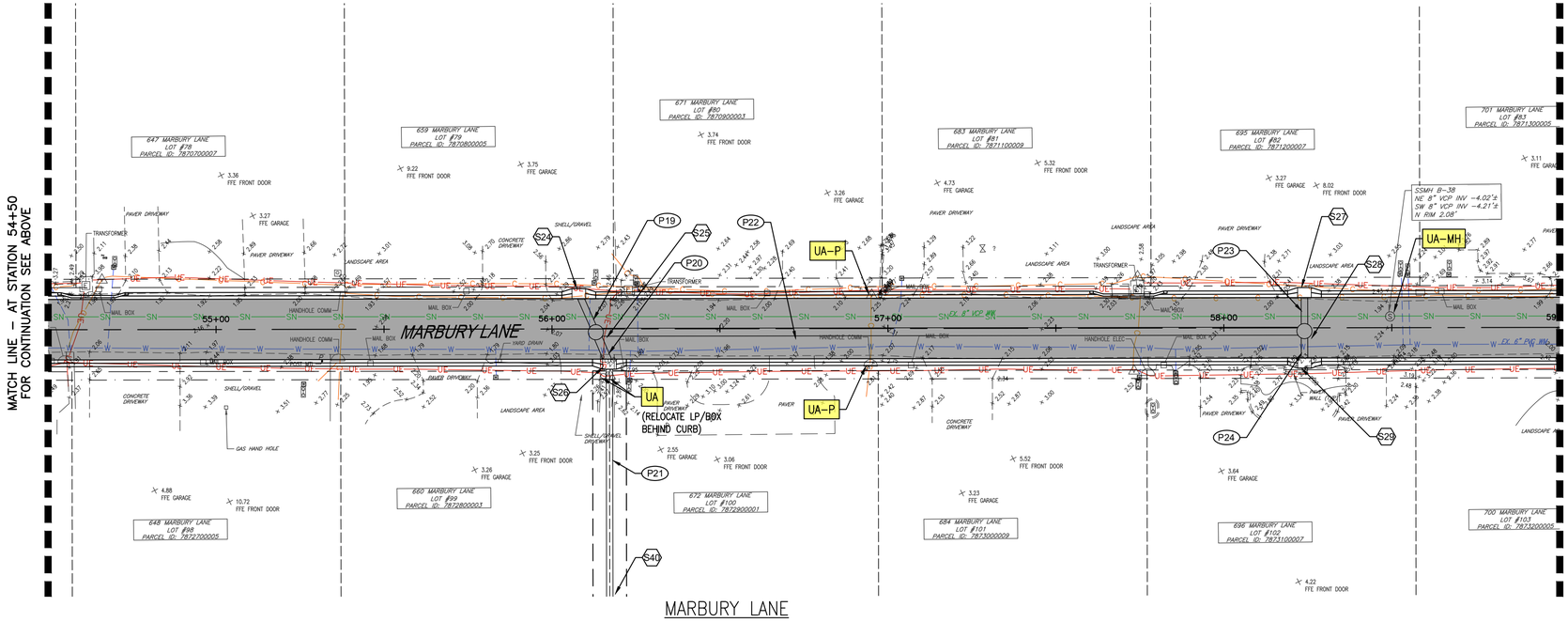

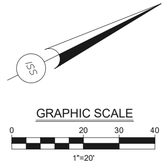

LEGEND

- EXISTING FIRE HYDRANT
- EXISTING WATER MAIN/SERVICE
- EXISTING WASTEWATER MAIN/SERVICE
- EXISTING GAS LINE
- EXISTING COMMUNICATIONS LINE
- EXISTING ELECTRIC LINE
- PROPOSED STORM STRUCTURE AND STORM PIPE

KEYNOTES

- UA — PROPOSED UTILITY ADJUSTMENT (AS DESCRIBED)
- UA–W — PROPOSED UTILITY ADJUSTMENT – WATER METER / BFP
- UA–P — PROPOSED UTILITY ADJUSTMENT – PEDESTAL / HANDHOLE
- UA–MH — PROPOSED MANHOLE LID ADJUSTMENT TO MATCH PROPOSED GRADE

NO.	DATE:	REVISION

10/8/2026 3:24:35 PM

INFRASTRUCTURE SOLUTION SERVICES
An HR Green Company
7319 Merchant Court
Sarasota, FL 34240
Phone: (941) 526-0813
FBPE CA# 29992

TOWN OF LONGBOAT KEY
PUBLIC WORKS DEPARTMENT
600 GENERAL HARRIS STREET
LONGBOAT KEY, FL 34228
PHONE (941) 316-1988

SLEEPY LAGOON
GENERAL HARRIS, PENFIELD, MARBURY

DRAWING TITLE: **UTILITY ADJUSTMENT PLAN**

PROJ. MGR.:	DRWN. BY:	CHKD. BY:	PROJECT NO.:
DMB	WSH	MWM	LBK003
SCALE: 1" = 20'	DATE: 05/15/2026		SHEET NO.: 42 OF 56

Z:\Projects\Sarasota Region\Longboat Key, Town of\LBK003 – 2504561 – Sleepy Lagoon Gen Harris, Penfield, Marbury\Drawings\ISS DWG\2 Eng\Final Dwg\LBK003 – 12 – UTIL_ADJUST_PLAN.dwg

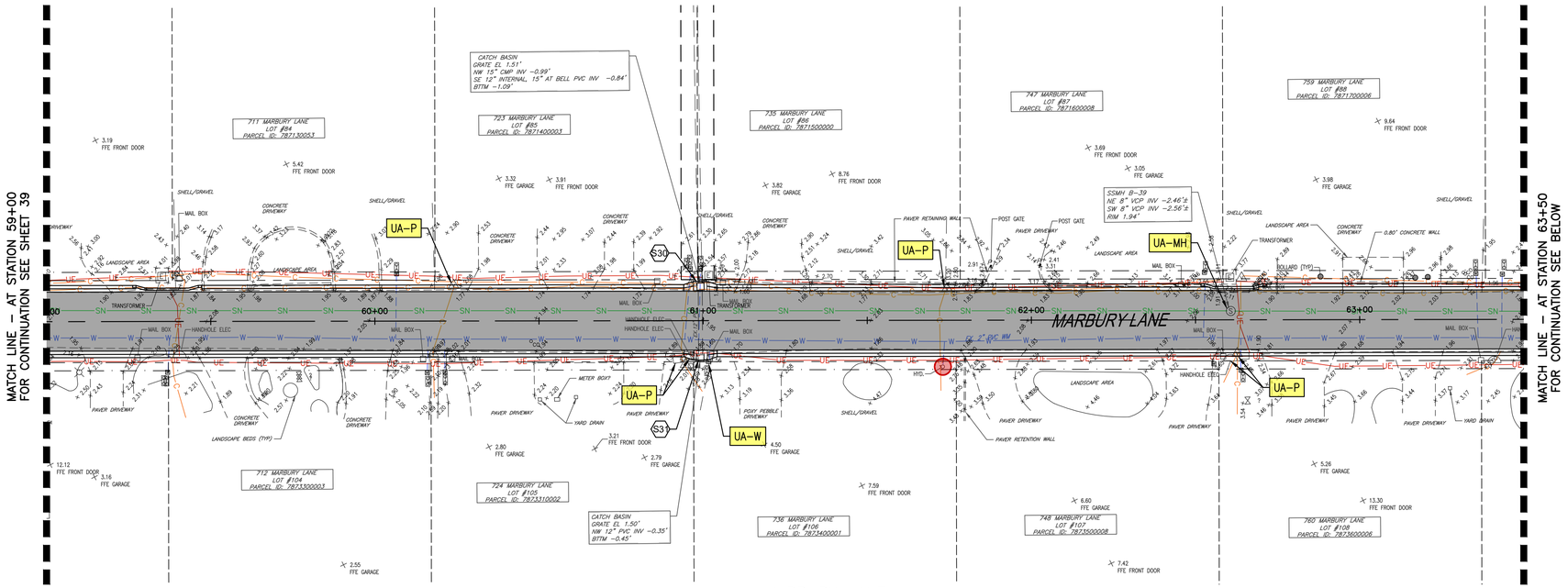

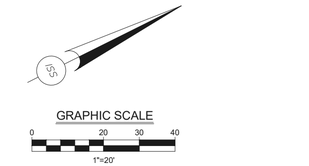

LEGEND

- EXISTING FIRE HYDRANT
- EXISTING WATER MAIN/SERVICE
- EXISTING WASTEWATER MAIN/SERVICE
- EXISTING GAS LINE
- EXISTING COMMUNICATIONS LINE
- EXISTING ELECTRIC LINE
- PROPOSED STORM STRUCTURE AND STORM PIPE

KEYNOTES

UA	PROPOSED UTILITY ADJUSTMENT (AS DESCRIBED)
UA–W	PROPOSED UTILITY ADJUSTMENT – WATER METER / BFP
UA–P	PROPOSED UTILITY ADJUSTMENT – PEDESTAL / HANDHOLE
UA–MH	PROPOSED MANHOLE LID ADJUSTMENT TO MATCH PROPOSED GRADE

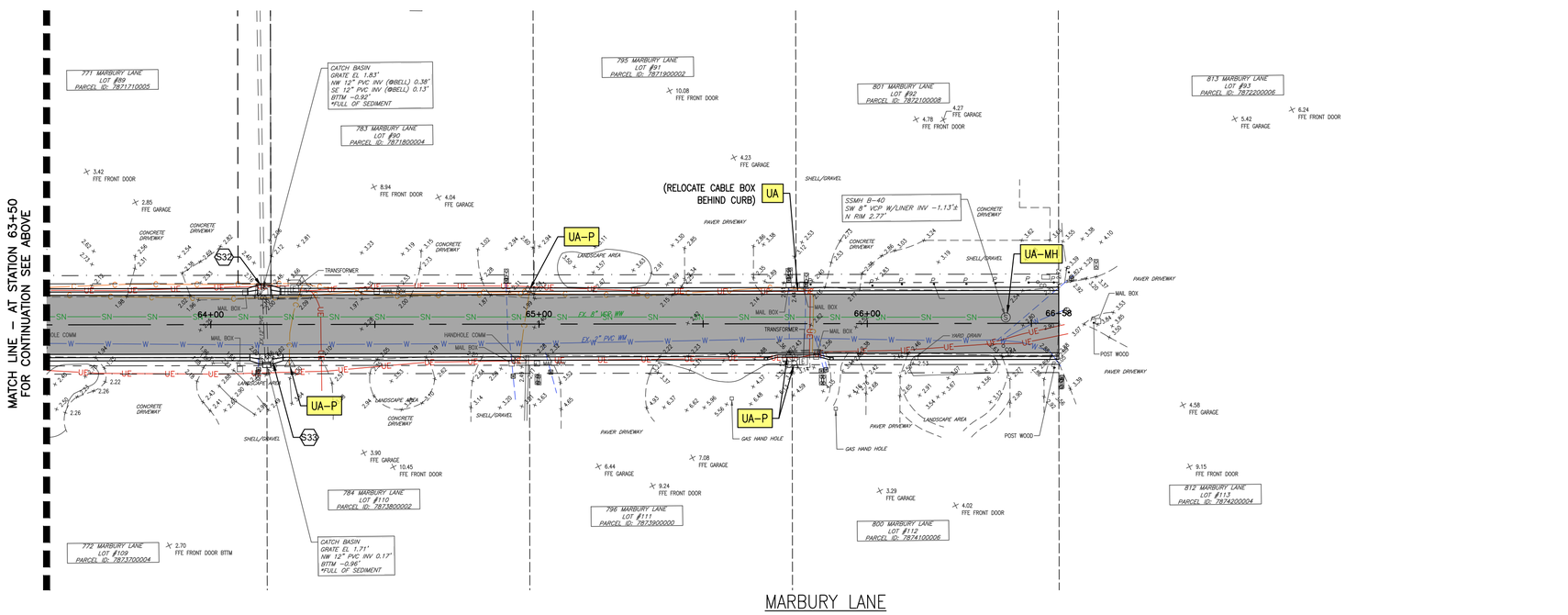

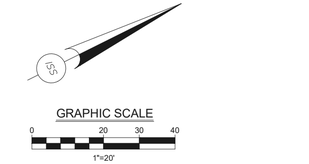

LEGEND

- EXISTING FIRE HYDRANT
- EXISTING WATER MAIN/SERVICE
- EXISTING WASTEWATER MAIN/SERVICE
- EXISTING GAS LINE
- EXISTING COMMUNICATIONS LINE
- EXISTING ELECTRIC LINE
- PROPOSED STORM STRUCTURE AND STORM PIPE

KEYNOTES

UA	PROPOSED UTILITY ADJUSTMENT (AS DESCRIBED)
UA–W	PROPOSED UTILITY ADJUSTMENT – WATER METER / BFP
UA–P	PROPOSED UTILITY ADJUSTMENT – PEDESTAL / HANDHOLE
UA–MH	PROPOSED MANHOLE LID ADJUSTMENT TO MATCH PROPOSED GRADE

NO.	DATE:	REVISION

10/8/2026 3:32:33 PM

INFRASTRUCTURE SOLUTION SERVICES
An HR Green Company
7319 Merchant Court
Sarasota, FL 34240
Phone: (941) 526-0813
FBPE CA# 29992

TOWN OF LONGBOAT KEY
PUBLIC WORKS DEPARTMENT
600 GENERAL HARRIS STREET
LONGBOAT KEY, FL 34228
PHONE (941) 316-1988

SLEEPY LAGOON
GENERAL HARRIS, PENFIELD, MARBURY

DRAWING TITLE: **UTILITY ADJUSTMENT PLAN**

PROJ. MGR.:	DRWN. BY:	CHKD. BY:	PROJECT NO.:
DMB	WSH	MWM	LBK003
SCALE: 1" = 20'	DATE: 05/15/2026		SHEET NO.: 43 OF 56

Z:\Projects\Sarasota Region\Longboat Key, Town of\LBK003 – 2504561 – Sleepy Lagoon Gen Harris, Penfield, Marbury\Drawings\ISS DWG\2 Eng\Final Dwg\LBK003 – 12 – UTIL_ADJUST_PLAN.dwg

SIGNING & PAVEMENT MARKING NOTES

1. STRIPING AND SIGNAGE SHALL CONFORM WITH THE MANUAL OF UNIFORM TRAFFIC CONTROL DEVICES AND F.D.O.T. STANDARD INDEX DRAWINGS FOR SUCH (LATEST EDITIONS).
2. REFER TO ARCHITECTURAL PLANS FOR ALL INTERNAL PAVEMENT MARKINGS IN PARKING GARAGE.
3. ALL PAVEMENT MARKINGS SHALL BE INSTALLED USING "ALKYD" THERMOPLASTIC 90 MIL IN THICKNESS.
4. ALL SIGNAGE SHALL INCLUDE THE PROPER ERECTION AND HARDWARE (POST, BRACKETS, ETC.) IN CONFORMANCE WITH THE F.D.O.T. STANDARD INDEX DRAWINGS. WHERE SHOWN ADJACENT TO LIGHT POLES, PROPOSED SIGNS SHALL BE POLE MOUNTED. ALL PROPOSED SIGNS SHALL BE CITY STANDARD BLACK DECORATIVE SIGNS (BACKING, POLE, ETC.)
5. ALL SIGN FACE MATERIAL SHALL MEET F.D.O.T. SPECIFICATIONS FOR ROAD AND BRIDGE CONSTRUCTION (LATEST EDITION) AND SUPPLEMENTS THERETO.
6. ALL EXISTING ROADWAY PAVEMENT MARKINGS SHALL REMAIN UNLESS OTHERWISE NOTED. ALL EXISTING MARKINGS IMPACTED BY CONSTRUCTION ACTIVITIES SHALL BE RECONSTRUCTED UNLESS OTHERWISE NOTED.
7. ALL SIGNS TO BE REMOVED AND NOT REINSTALLED SHALL BE RETURNED TO THE TOWN OF LONGBOAT KEY TRAFFIC ENGINEERING AND OPERATIONS DEPARTMENT.
8. ALL SIGNS TO BE RELOCATED SHALL BE REINSTALLED WITH ALL DAMAGED SIGN AND HARDWARE REPLACED.
9. ALL PROPOSED SIGNS SHALL BE DESIGNED FOR 90 MPH WIND LOADING.
10. BI-DIRECTIONAL BLUE RAISED REFLECTIVE PAVEMENT MARKERS SHALL BE INSTALLED ADJACENT TO ALL FIRE HYDRANT LOCATIONS, IN ACCORDANCE WITH TOWN OF LONGBOAT KEY FIRE DEPARTMENT REQUIREMENTS.

PAVEMENT MARKING LEGEND

1		WHITE – 6" WIDE SOLID STRIPE (LANE LINE)
2		YELLOW – 6" WIDE DOUBLE STRIPE (LANE LINE)
3		WHITE – 24" WIDE SOLID STRIPE (STOP BAR)
4		WHITE – PAVEMENT SYMBOL (DIRECTION AS SHOWN)
5	6'CLR.	WHITE – 12" SOLID CROSSWALK STRIPE (STANDARD); (THERMOPLASTIC)
6		WHITE 24" SOLID CROSSWALK STRIPE (HIGH EMPHASIS) (THERMOPLASTIC)

SIGN LEGEND

A	STOP	STOP SIGN R1–1 W/R 30"X30"
B	SPEED LIMIT 20	SPEED LIMIT R2–1 B/W 24"X30"
C		TYPE 4 OBJECT MARKER OM4–1 R/R 18"X18"
D		CHEVRON ALIGNMENT W1–8 B/Y 18"X24"
E		CHEVRON ALIGNMENT W1–8 B/Y 18"X24"
F		CURVE AHEAD W1–2R B/Y 30"X30"
G	NO OUTLET	NO OUTLET SIGN W14–2 B/Y 30"X30"
RM		EXISTING SIGN(S) TO REMAIN
RX		EXISTING SIGN(S) TO BE REMOVED
RC		EXISTING SIGN(S) TO BE RELOCATED TO ACCOMMODATE PROPOSED PAVEMENT / INFRASTRUCTURE MODIFICATION

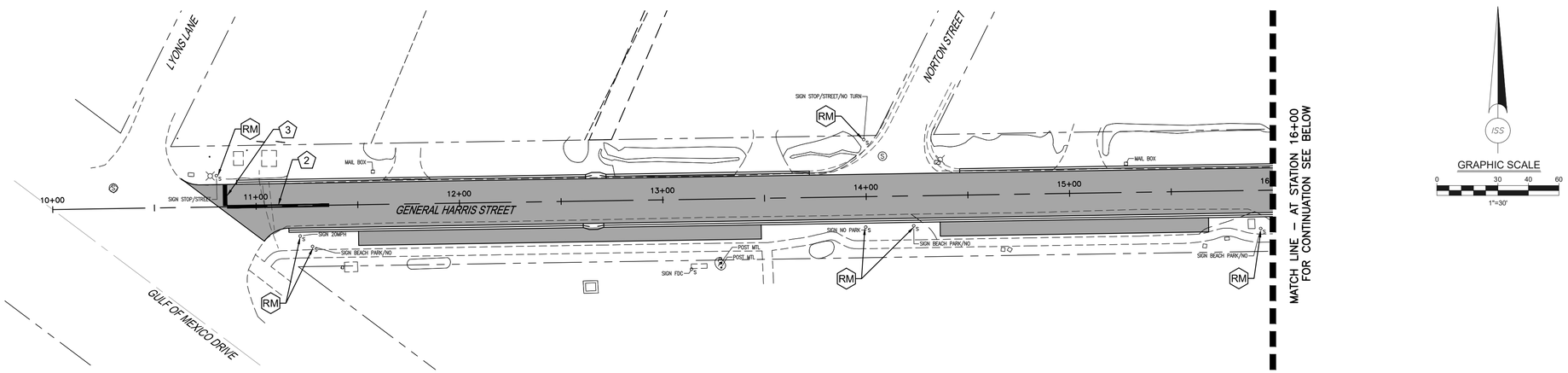

GENERAL HARRIS STREET

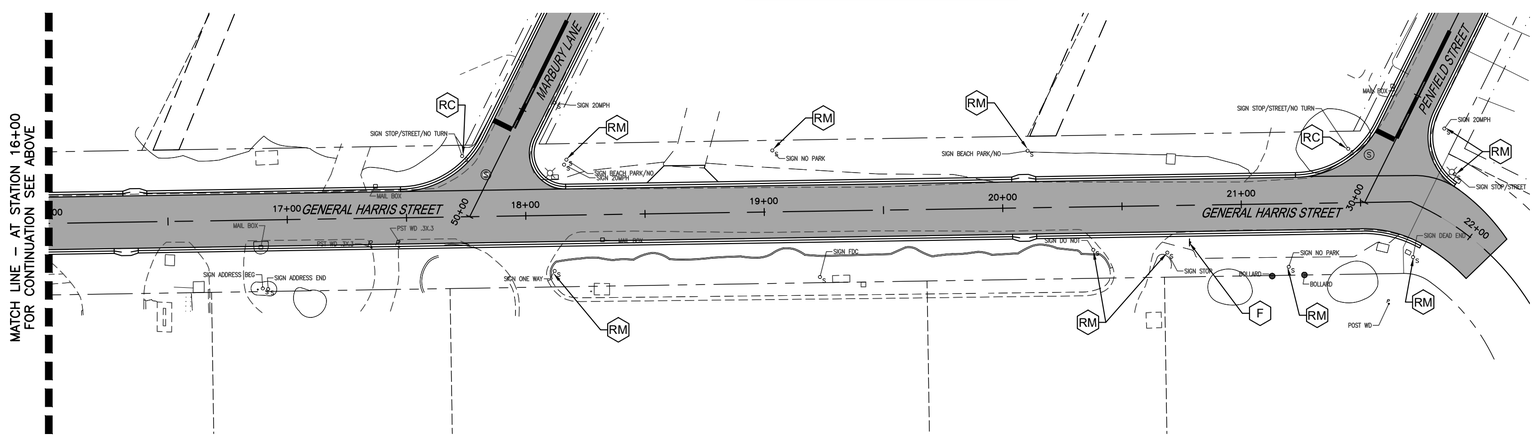

GENERAL HARRIS STREET

GRAPHIC SCALE
0 30 40 60
1"=30'

NO.	DATE:	REVISION

10/8/2026 3:35:05 PM

INFRASTRUCTURE SOLUTION SERVICES
An HR Green Company
7319 Merchant Court
Sarasota, FL 34240
Phone: (941) 526-0813
FBPE CA# 29992

TOWN OF LONGBOAT KEY
PUBLIC WORKS DEPARTMENT
600 GENERAL HARRIS STREET
LONGBOAT KEY, FL 34228
PHONE (941) 316-1988

SLEEPY LAGOON
GENERAL HARRIS, PENFIELD, MARBURY

DRAWING TITLE: **SIGN AND PAVEMENT MARKING PLAN**

PROJ. MGR.:	DRWN. BY:	CHKD. BY:	PROJECT NO.:
DMB	WSH	MWM	LBK003
SCALE: 1" = 30'	DATE: 05/15/2026		SHEET NO.: 44 OF 56

Z:\Projects\Sarasota Region\Longboat Key, Town of\LBK003 – 2504561 – Sleepy Lagoon Gen Harris, Penfield, Marbury\Drawings\ISS DWG\2 Eng\Final Dwg\LBK003 – 13 – SIGN_PVMT_PLAN.dwg

SIGNING & PAVEMENT MARKING NOTES

1. STRIPING AND SIGNAGE SHALL CONFORM WITH THE MANUAL OF UNIFORM TRAFFIC CONTROL DEVICES AND F.D.O.T. STANDARD INDEX DRAWINGS FOR SUCH (LATEST EDITIONS).
2. REFER TO ARCHITECTURAL PLANS FOR ALL INTERNAL PAVEMENT MARKINGS IN PARKING GARAGE.
3. ALL PAVEMENT MARKINGS SHALL BE INSTALLED USING "ALKYD" THERMOPLASTIC 90 MIL IN THICKNESS.
4. ALL SIGNAGE SHALL INCLUDE THE PROPER ERECTION AND HARDWARE (POST, BRACKETS, ETC.) IN CONFORMANCE WITH THE F.D.O.T. STANDARD INDEX DRAWINGS. WHERE SHOWN ADJACENT TO LIGHT POLES, PROPOSED SIGNS SHALL BE POLE MOUNTED. ALL PROPOSED SIGNS SHALL BE CITY STANDARD BLACK DECORATIVE SIGNS (BACKING, POLE, ETC.)
5. ALL SIGN FACE MATERIAL SHALL MEET F.D.O.T. SPECIFICATIONS FOR ROAD AND BRIDGE CONSTRUCTION (LATEST EDITION) AND SUPPLEMENTS THERETO.
6. ALL EXISTING ROADWAY PAVEMENT MARKINGS SHALL REMAIN UNLESS OTHERWISE NOTED. ALL EXISTING MARKINGS IMPACTED BY CONSTRUCTION ACTIVITIES SHALL BE RECONSTRUCTED UNLESS OTHERWISE NOTED.
7. ALL SIGNS TO BE REMOVED AND NOT REINSTALLED SHALL BE RETURNED TO THE TOWN OF LONGBOAT KEY TRAFFIC ENGINEERING AND OPERATIONS DEPARTMENT.
8. ALL SIGNS TO BE RELOCATED SHALL BE REINSTALLED WITH ALL DAMAGED SIGN AND HARDWARE REPLACED.
9. ALL PROPOSED SIGNS SHALL BE DESIGNED FOR 90 MPH WIND LOADING.
10. BI-DIRECTIONAL BLUE RAISED REFLECTIVE PAVEMENT MARKERS SHALL BE INSTALLED ADJACENT TO ALL FIRE HYDRANT LOCATIONS, IN ACCORDANCE WITH TOWN OF LONGBOAT KEY FIRE DEPARTMENT REQUIREMENTS.

PAVEMENT MARKING LEGEND

1. WHITE – 6" WIDE SOLID STRIPE (LANE LINE)
2. YELLOW – 6" WIDE DOUBLE STRIPE (LANE LINE)
3. WHITE – 24" WIDE SOLID STRIPE (STOP BAR)
4. WHITE – PAVEMENT SYMBOL (DIRECTION AS SHOWN)
5. 6'CLR. WHITE – 12" SOLID CROSSWALK STRIPE (STANDARD); (THERMOPLASTIC)
6. WHITE 24" SOLID CROSSWALK STRIPE (HIGH EMPHASIS) (THERMOPLASTIC)

SIGN LEGEND

- A — STOP — STOP SIGN R1–1 W/R 30"X30"
- B — SPEED LIMIT 20 — SPEED LIMIT R2–1 B/W 24"X30"
- C — TYPE 4 OBJECT MARKER OM4–1 R/R 18"X18"
- D — CHEVRON ALIGNMENT W1–8 B/Y 18"X24"
- E — CHEVRON ALIGNMENT W1–8 B/Y 18"X24"
- F — CURVE AHEAD W1–2R B/Y 30"X30"
- G — NO OUTLET — NO OUTLET SIGN W14–2 B/Y 30"X30"
- RM — EXISTING SIGN(S) TO REMAIN
- RX — EXISTING SIGN(S) TO BE REMOVED
- RC — EXISTING SIGN(S) TO BE RELOCATED TO ACCOMMODATE PROPOSED PAVEMENT / INFRASTRUCTURE MODIFICATION

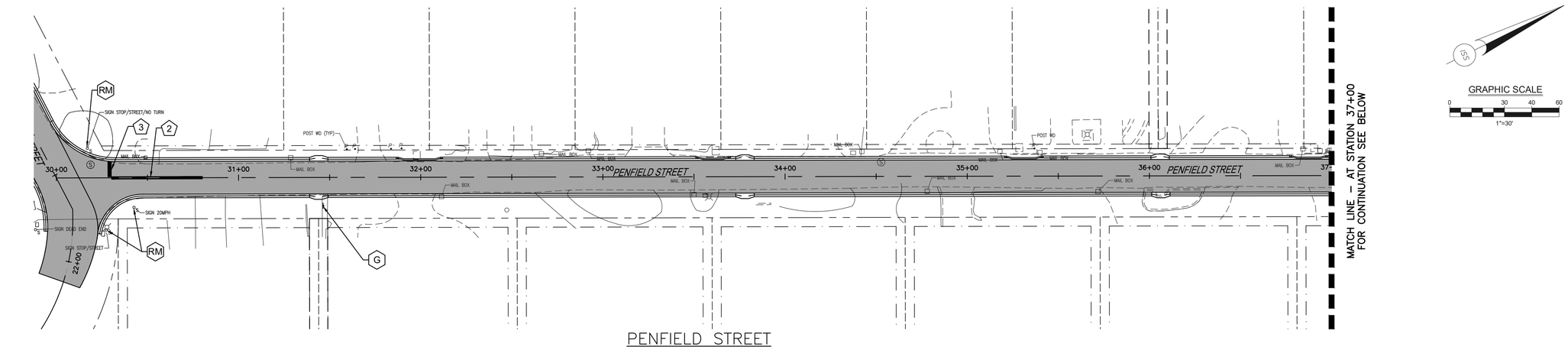

PENFIELD STREET

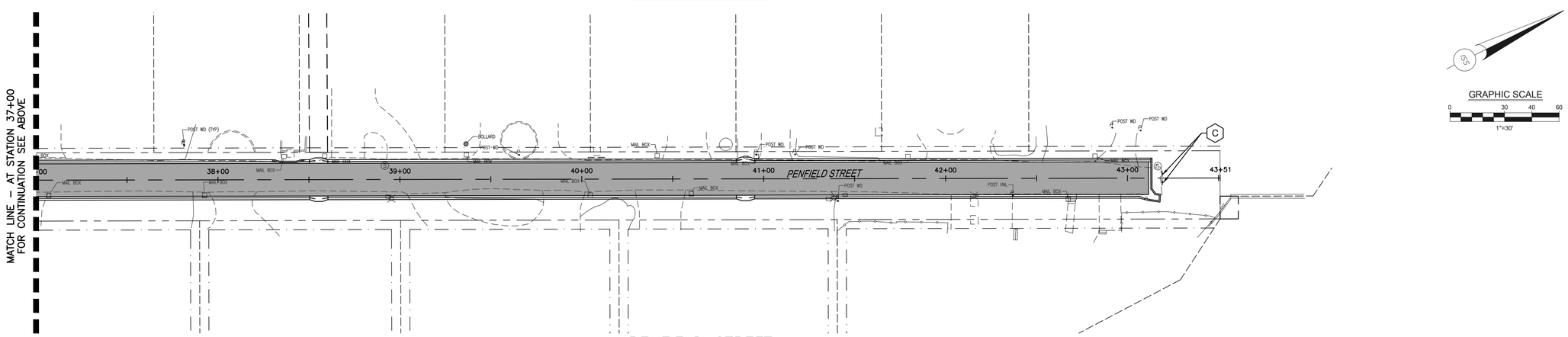

PENFIELD STREET

NO.	DATE:	REVISION

INFRASTRUCTURE SOLUTION SERVICES
An HR Green Company
7319 Merchant Court
Sarasota, FL 34240
Phone: (941) 526-0813
FBPE CA# 29992

TOWN OF LONGBOAT KEY
PUBLIC WORKS DEPARTMENT
600 GENERAL HARRIS STREET
LONGBOAT KEY, FL 34228
PHONE (941) 316-1988

SLEEPY LAGOON
GENERAL HARRIS, PENFIELD, MARBURY

DRAWING TITLE: **SIGN AND PAVEMENT MARKING PLAN**

PROJ. MGR.:	DRWN. BY:	CHKD. BY:	PROJECT NO.:
DMB	WSH	MWM	LBK003
SCALE: 1" = 30'	DATE: 05/15/2026		SHEET NO.: 45 OF 56

10/8/2026 3:31:59 PM

Z:\Projects\Sarasota Region\Longboat Key, Town of\LBK003 – 2504561 – Sleepy Lagoon Gen Harris, Penfield, Marbury\Drawings\ISS DWG\2 Eng\Final Dwg\LBK003 – 13 – SIGN_PVMT_PLAN.dwg

SIGNING & PAVEMENT MARKING NOTES

1. STRIPING AND SIGNAGE SHALL CONFORM WITH THE MANUAL OF UNIFORM TRAFFIC CONTROL DEVICES AND F.D.O.T. STANDARD INDEX DRAWINGS FOR SUCH (LATEST EDITIONS).
2. REFER TO ARCHITECTURAL PLANS FOR ALL INTERNAL PAVEMENT MARKINGS IN PARKING GARAGE.
3. ALL PAVEMENT MARKINGS SHALL BE INSTALLED USING "ALKYD" THERMOPLASTIC 90 MIL IN THICKNESS.
4. ALL SIGNAGE SHALL INCLUDE THE PROPER ERECTION AND HARDWARE (POST, BRACKETS, ETC.) IN CONFORMANCE WITH THE F.D.O.T. STANDARD INDEX DRAWINGS. WHERE SHOWN ADJACENT TO LIGHT POLES, PROPOSED SIGNS SHALL BE POLE MOUNTED. ALL PROPOSED SIGNS SHALL BE CITY STANDARD BLACK DECORATIVE SIGNS (BACKING, POLE, ETC.)
5. ALL SIGN FACE MATERIAL SHALL MEET F.D.O.T. SPECIFICATIONS FOR ROAD AND BRIDGE CONSTRUCTION (LATEST EDITION) AND SUPPLEMENTS THERETO.
6. ALL EXISTING ROADWAY PAVEMENT MARKINGS SHALL REMAIN UNLESS OTHERWISE NOTED. ALL EXISTING MARKINGS IMPACTED BY CONSTRUCTION ACTIVITIES SHALL BE RECONSTRUCTED UNLESS OTHERWISE NOTED.
7. ALL SIGNS TO BE REMOVED AND NOT REINSTALLED SHALL BE RETURNED TO THE TOWN OF LONGBOAT KEY TRAFFIC ENGINEERING AND OPERATIONS DEPARTMENT.
8. ALL SIGNS TO BE RELOCATED SHALL BE REINSTALLED WITH ALL DAMAGED SIGN AND HARDWARE REPLACED.
9. ALL PROPOSED SIGNS SHALL BE DESIGNED FOR 90 MPH WIND LOADING.
10. BI-DIRECTIONAL BLUE RAISED REFLECTIVE PAVEMENT MARKERS SHALL BE INSTALLED ADJACENT TO ALL FIRE HYDRANT LOCATIONS, IN ACCORDANCE WITH TOWN OF LONGBOAT KEY FIRE DEPARTMENT REQUIREMENTS.

PAVEMENT MARKING LEGEND

1	—	WHITE – 6" WIDE SOLID STRIPE (LANE LINE)
2	═	YELLOW – 6" WIDE DOUBLE STRIPE (LANE LINE)
3	▬	WHITE – 24" WIDE SOLID STRIPE (STOP BAR)
4	←	WHITE – PAVEMENT SYMBOL (DIRECTION AS SHOWN)
5	6'CLR.	WHITE – 12" SOLID CROSSWALK STRIPE (STANDARD); (THERMOPLASTIC)
6	▌▌▌▌▌	WHITE 24" SOLID CROSSWALK STRIPE (HIGH EMPHASIS) (THERMOPLASTIC)

SIGN LEGEND

A	STOP	STOP SIGN R1–1 W/R 30"X30"
B	SPEED LIMIT 20	SPEED LIMIT R2–1 B/W 24"X30"
C		TYPE 4 OBJECT MARKER OM4–1 R/R 18"X18"
D		CHEVRON ALIGNMENT W1–8 B/Y 18"X24"
E		CHEVRON ALIGNMENT W1–8 B/Y 18"X24"
F		CURVE AHEAD W1–2R B/Y 30"X30"
G	NO OUTLET	NO OUTLET SIGN W14–2 B/Y 30"X30"
RM		EXISTING SIGN(S) TO REMAIN
RX		EXISTING SIGN(S) TO BE REMOVED
RC		EXISTING SIGN(S) TO BE RELOCATED TO ACCOMMODATE PROPOSED PAVEMENT / INFRASTRUCTURE MODIFICATION

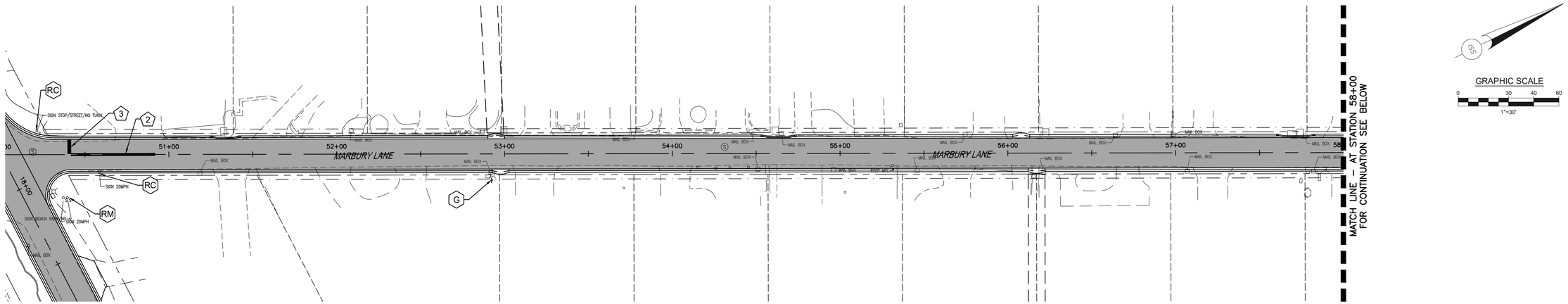

MARBURY LANE

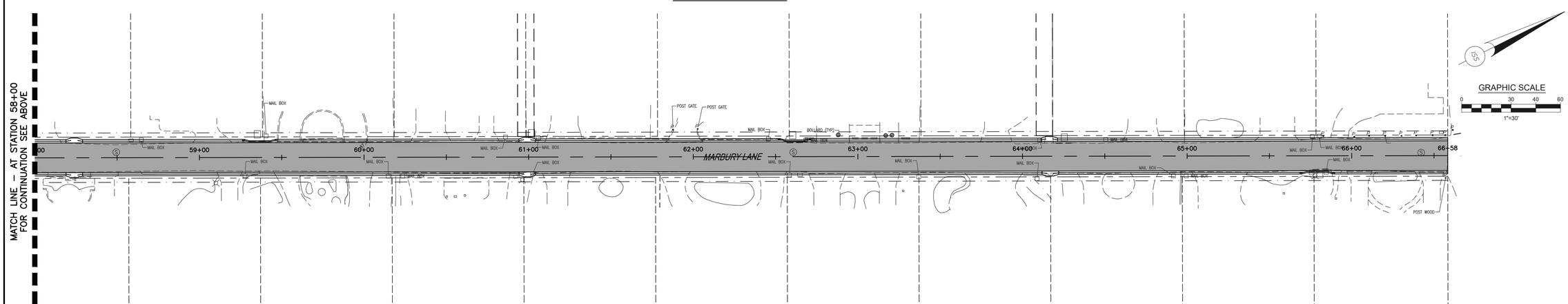

MARBURY LANE

NO.	DATE:	REVISION

INFRASTRUCTURE SOLUTION SERVICES
An HR Green Company
7319 Merchant Court
Sarasota, FL 34240
Phone: (941) 526-0813
FBPE CA# 29992

TOWN OF LONGBOAT KEY
PUBLIC WORKS DEPARTMENT
600 GENERAL HARRIS STREET
LONGBOAT KEY, FL 34228
PHONE (941) 316-1988

SLEEPY LAGOON
GENERAL HARRIS, PENFIELD, MARBURY

DRAWING TITLE: **SIGN AND PAVEMENT MARKING PLAN**

PROJ. MGR.:	DRWN. BY:	CHKD. BY:	PROJECT NO.:
DMB	WSH	MWM	LBK003
SCALE: 1" = 30'	DATE: 05/15/2026		SHEET NO.: 46 OF 56

10/8/2026 3:40:45 PM

Z:\Projects\Sarasota Region\Longboat Key, Town of\LBK003 – 2504561 – Sleepy Lagoon Gen Harris, Penfield, Marbury\Drawings\ISS DWG\2 Eng\Final Dwg\LBK003 – 13 – SIGN_PVMT_PLAN.dwg

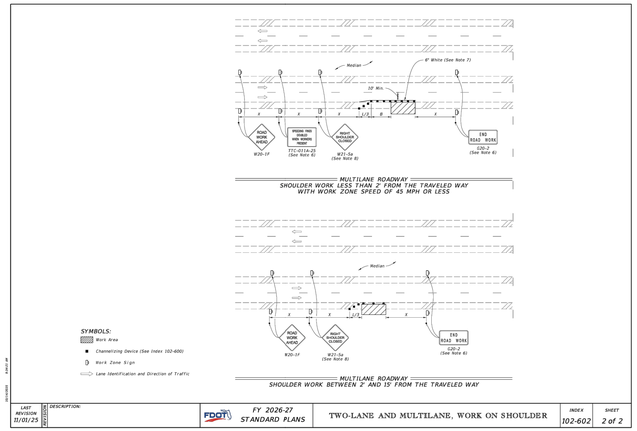

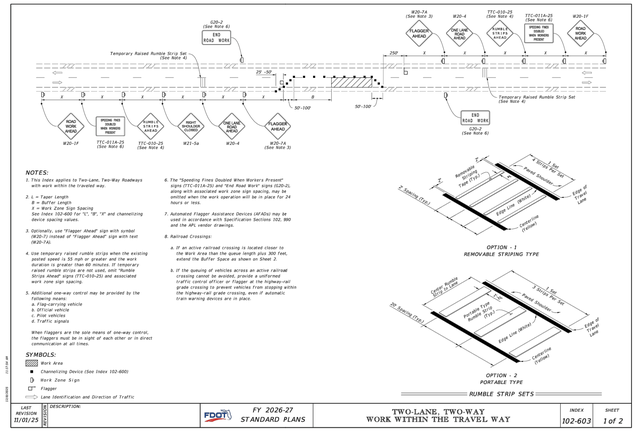

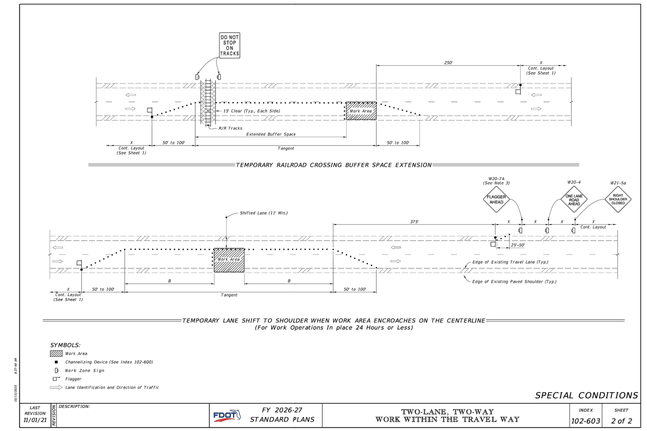

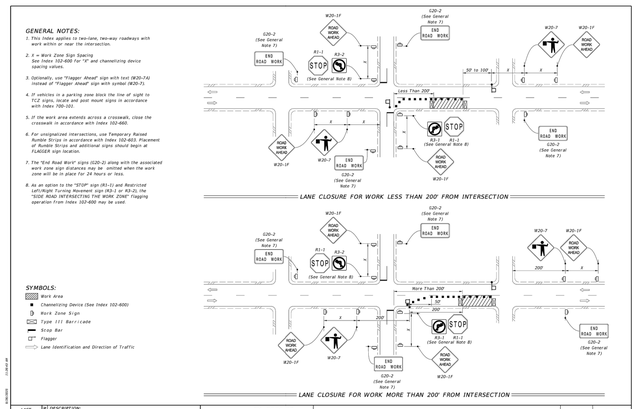

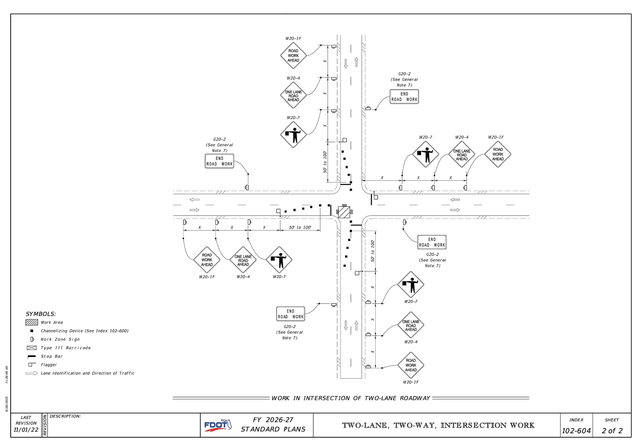

MAINTENANCE OF TRAFFIC NOTES

1. THE CONTRACTOR SHALL USE ANY APPLICABLE INDEX FROM THE FDOT STANDARD PLANS FY 2026–27 (102 SERIES) PERTAINING TO TRAFFIC CONTROL THROUGH WORK ZONES.
2. THE CONTRACTOR SHALL HAVE A WORKSITE TRAFFIC SUPERVISOR QUALIFIED PER FDOT STANDARD SPECIFICATIONS FOR ROAD AND BRIDGE CONSTRUCTION (SECTION 105–8) WHO SHALL EXECUTE THE DUTIES DESCRIBED IN FDOT STANDARD SPECIFICATIONS FOR ROAD AND BRIDGE CONSTRUCTION (SECTION 102–3).
3. CONTRACTOR TO INSTALL TRAFFIC CONTROL IN WORK ZONE SIGNS 48 HOURS PRIOR TO BEGINNING OF CONSTRUCTION.
4. THE CONTRACTOR SHALL REDUCE THE POSTED SPEED LIMIT TO PROVIDE A SAFE ENVIRONMENT. SIGNS SHALL BE PROPERLY PLACED IN ACCORDANCE WITH FDOT DESIGN STANDARDS, FDOT STANDARD PLANS, AND FDOT STANDARD SPECIFICATIONS FOR ROAD AND BRIDGE CONSTRUCTION.
5. IT SHALL BE THE CONTRACTOR'S SOLE RESPONSIBILITY TO MAINTAIN ADEQUATE TRAFFIC CONTROL AND TO PROVIDE DETOURS AROUND CONSTRUCTION ACTIVITIES.
6. THE CONTRACTOR SHALL NOTIFY LOCAL LAW ENFORCEMENT AGENCIES AND FIRE STATIONS AT LEAST 48 HOURS IN ADVANCE OF ANY LANE CLOSURES.
7. AT LEAST ONE LANE OF ROAD SHALL BE KEPT OPEN TO TRAFFIC AT ALL TIMES.
8. CONTRACTOR AT CONTRACTOR'S EXPENSE SHALL GIVE RESIDENTS AND BUSINESSES LOCATED ON THE PROJECT RIGHT–OF–WAY 48 HOURS NOTICE OF START OF CONSTRUCTION AND HAVE MAINTENANCE OF TRAFFIC SIGNAGE IN PLACE PRIOR TO BEGINNING ANY CONSTRUCTION. THE TOWN OF LONGBOAT KEY WILL PROVIDE DOOR HANGER TYPE NOTICES TO THE CONTRACTOR. CONTRACTOR PERSONNEL SHALL DISTRIBUTE TO EACH BUSINESS AND RESIDENT 24 HOURS PRIOR TO STARTING ANY OPERATIONS THAT COULD PREVENT ACCESS TO ANY RESIDENCE OR BUSINESS. THE CONTRACTOR SHALL ALSO NOTIFY LOCAL LAW ENFORCEMENT AGENCIES AND FIRE STATIONS AT LEAST 48 HOURS IN ADVANCE OF ANY LANE CLOSURES.
9. ROADWAY CLOSURES WILL ONLY BE ALLOWED FOR THE REPLACEMENT OF THE CROSS DRAINS. CONTRACTOR SHOULD REFERENCE THE TOWN OF LONGBOAT KEY DISTRICT SCHOOLS CALENDAR AND SCHEDULE CLOSURES DURING ACADEMIC HOLIDAYS TO LIMIT SCHOOL BUS AND REGULAR TRAFFIC DISRUPTIONS.
10. ROADWAYS WILL BE PERMITTED TO BE CLOSED FOR NO MORE THAN 2 DAYS CONSECUTIVELY PER CROSSING LOCATION. CONTRACTOR WILL BE ASSESSED LIQUIDATED DAMAGES IN THE AMOUNT OF $1,665.00 A DAY IF THE CONTRACTOR EXCEEDS THE TOTAL CONTRACT TIME AND/OR THE APPROVED ROAD CLOSURE DAYS. SPECIAL DETOUR MUST BE IN PLACE PRIOR TO CLOSING THE ROADWAY. TWO WAY TRAFFIC MUST BE MAINTAINED DURING THE REMAINDER OF THE CONSTRUCTION PERIOD.
11. ROADWAY CLOSURES SHALL BE LIMITED TO THE CROSS DRAIN REPLACEMENT LOCATIONS.
12. ALL ROAD CLOSURES REQUIRE LAW ENFORCEMENT, EMERGENCY SERVICES AND TOWN OF LONGBOAT KEY DISTRICT SCHOOLS TO BE NOTIFIED IN ADVANCE OF THE CLOSURE. ANY ROAD CLOSURES WILL REQUIRE A MINIMUM OF TEN (10) WORKING DAYS NOTICE PRIOR TO CLOSURE.
13. TWO (2) WORKING DAYS IN ADVANCE OF ANY ROAD CLOSURE, THE CONTRACTOR SHALL POST PORTABLE CHANGEABLE (VARIABLE) MESSAGE SIGNS (PCMS) THAT CAN BE CLEARLY READ BY THE TRAVELING PUBLIC NOTIFYING THE PUBLIC OF THE ROAD CLOSURE. CHANGEABLE MESSAGE SIGNS MESSAGES AS FOLLOWS: "NEHI RD CLOSED" / "MM, DD–DD". "CLOSED TO THRU TRAFFIC" / "LOCAL TRAFFIC ONLY" MESSAGE SHALL BE DISPLAYED, AS NECESSARY, DURING CONSTRUCTION. PORTABLE CHANGEABLE MESSAGE SIGNS SHALL BE USED IN ACCORDANCE WITH STANDARD PLANS INDEX 102 SERIES DURING ROADWAY CLOSURE PERIODS OR AS DIRECTED BY TOWN OF LONGBOAR KEY AND/OR FDOT. PCMS SHALL BE INCLUDED WITH PAY ITEM 102–1.
14. THE CONTRACTOR SHALL COOPERATE WITH LOCAL RESIDENTS IN GAINING ACCESS TO THEIR HOMES AND BUSINESSES DURING WORKING HOURS AND SHALL ASSIST AT ALL TIMES WHEN VEHICLES EXPERIENCE TROUBLE DUE TO CONSTRUCTION ACTIVITIES.
15. THE CONTRACTOR SHALL PUT FORTH EVERY REASONABLE EFFORT TO MINIMIZE DISRUPTION AND DISTURBANCE OF ADJACENT PROPERTIES. ACCESS BY PROPERTY OWNERS TO THEIR PROPERTY SHALL BE MAINTAINED AT ALL TIMES, AND ANY BARRICADING OF ACCESS MUST BE COORDINATED WITH THE AFFECTED PROPERTY OWNERS.
16. THE CONTRACTOR, AT CONTRACTOR'S EXPENSE, SHALL BE RESPONSIBLE FOR DESIGNING AND IMPLEMENTING A DETOUR PLAN, TO INCLUDE SIGNAGE.
17. THE ROADWAY CONSTRUCTION SEQUENCE IS TO BE DETERMINED BY THE CONTRACTOR.
18. WHEN TRAFFIC SIGNS ARE LOCATED WITHIN THE AREA OF CONSTRUCTION, THE CONTRACTOR SHALL NOTIFY THE TOWN INSPECTOR FOR APPROVAL TO REMOVE, RE–SET, OR RELOCATE ANY SIGN. THE CONTRACTOR SHALL REINSTALL ANY DISTURBED MAILBOXES OR SIGNS TO EXISTING OR ACCEPTABLE CONDITIONS.
19. IF WORK IS REQUIRED AFTER SUNSET, ALL ELEMENTS OF THE NIGHT REQUIREMENTS FOR TRAFFIC CONTROL THROUGH WORK ZONES AS SPECIFIED IN THE FDOT DESIGN STANDARDS SHALL BE IN PLACE PRIOR TO BEGINNING WORK.
20. AT THE DIRECTION OF THE TOWN ENGINEER, IF LANE CLOSURE CAUSES EXTENDED CONGESTION, THE CONTRACTOR SHALL BE DIRECTED TO RE–OPEN THE CLOSED LANE(S) UNTIL SUCH TIME AS THE TRAFFIC FLOW HAS RETURNED TO NORMAL.
21. CONTRACTOR SHALL INSTALL WARNING SIGNS IN AREAS WHERE THERE IS A PAVING LANE OR SHOULDER DROP–OFF CAUSED BY THE CONSTRUCTION ACTIVITY.
22. IN THE EVENT THAT LAW ENFORCEMENT IS REQUIRED FOR MAINTENANCE OF TRAFFIC, THE CONTRACTOR SHALL PAY ALL COSTS.
23. THE CONTRACTOR SHALL REMOVE OR COVER ANY EXISTING OR PROPOSED SIGNS OR PAVEMENT MARKINGS THAT CONFLICT WITH THE TRAFFIC CONTROL PLANS. WHEN THE TOWN NO LONGER REQUIRES, THE CONTRACTOR SHALL RESTORE THE SIGNS OR PAVEMENT MARKINGS TO THEIR ORIGINAL POSITION.
24. SPEED REDUCTION SIGNS ARE TO BE USED ONLY IN THE AREAS WHERE ACTUAL WORK IS BEING PERFORMED. ANY SPEED REDUCTION SIGN IN AREAS WHERE WORK IS NOT CURRENTLY BEING PERFORMED SHALL BE COVERED.
25. ALL LANES MUST BE RETURNED TO NORMAL TRAFFIC WITHIN 12 HOURS OF AN EVACUATION NOTICE FOR A HURRICANE OR OTHER CATASTROPHIC EVENT AND SHALL REMAIN OPEN FOR THE DURATION OF THE EVACUATION EVENT AS DIRECTED BY THE TOWN ENGINEER.
26. WHEN A ROAD IS CLOSED TO THRU–TRAFFIC, IN ADDITION TO INSTALLING THE APPLICABLE CLOSURE AND DETOUR SIGNAGE TO ROUTE THE THRU–TRAFFIC AROUND THE CLOSURE, THE CONTRACTOR SHALL COMPLY WITH ALL APPLICABLE PORTIONS OF THE FDOT DESIGN STANDARDS AND STANDARD SPECIFICATIONS TO PROVIDE FOR THE CONTROL AND PROTECTION OF LOCAL TRAFFIC THROUGH DESIGN SECTION OF ROADWAY. THROUGHOUT THE DURATION OF THE CLOSURE, DAY AND NIGHT, TO INCLUDE ADVANCED WARNING SIGNS, PROJECTING THE NEEDED TWO–WAY (SINGLE LANE) TRAFFIC OPERATIONS INTO THE FLAGGING AREAS, AS APPLICABLE.
27. TRAFFIC CONTROL DEVICES REQUIRED BY FDOT STANDARD PLANS INDEX 102 SERIES AND THE MUTCD SHALL BE PROVIDED AS CONDITIONS WARRANT IN EACH CONSTRUCTION PHASE. THE COORDINATION OF MAINTENANCE OF TRAFFIC CONDITIONS BETWEEN SUCCESSIVE WORK ZONE LOCATIONS OR ADJACENT CONTRACTORS SHALL BE THE RESPONSIBILITY OF THE CONTRACTOR WITH APPROVAL OF THE TOWN OF LONGBOAT KEY.
28. SEE FDOT STANDARD SPECIFICATIONS FOR ROAD AND BRIDGE CONSTRUCTION SECTION 102 (MAINTENANCE OF TRAFFIC) FOR ANY ADDITIONAL REQUIREMENTS.

NO.	DATE:	REVISION

INFRASTRUCTURE SOLUTION SERVICES
An HR Green Company
7319 Merchant Court
Sarasota, FL 34240
Phone: (941) 526-0813
FBPE CA# 29992

TOWN OF LONGBOAT KEY
PUBLIC WORKS DEPARTMENT
600 GENERAL HARRIS STREET
LONGBOAT KEY, FL 34228
PHONE (941) 316-1988

SLEEPY LAGOON
GENERAL HARRIS, PENFIELD, MARBURY

DRAWING TITLE: **TRAFFIC CONTROL PLAN**

PROJ. MGR.:	DRWN. BY:	CHKD. BY:	PROJECT NO.:
DMB	WSH	MWM	LBK003
SCALE: N.T.S.	DATE: 05/15/2026		SHEET NO.: 47 OF 56

SWPPP / EROSION CONTROL PLAN FOR RENOVATION OF SLEEPY LAGOON: GENERAL HARRIS STREET, PENFIELD STREET, AND MARBURY LANE

1.0 SITE DESCRIPTION

1.A NATURE OF CONSTRUCTION ACTIVITY:

THE PROJECT IS THE RENOVATION OF SLEEPY LAGOON: GENERAL HARRIS STREET, PENFIELD STREET, AND MARBURY LANE, IN THE TOWN OF LONGBOAY KEY, MANATEE COUNTY. THIS INVOLVES ELEVATING THE ROADWAY SURFACE, ADDING MIAMI CURB AND GUTTER, ADDING VALLEY GUTTER, AND ADDING STORM DRAIN SYSTEMS. THE PROJECT EXTENDS FROM GULF OF MEXICO DRIVE TO THE NORTH END OF THE STREET FOR ROADWAYS; GENERAL HARRIS STREET, PENFIELD STREET, AND MARBURY LANE.

THE PROJECT LENGTH IS APPROXIMATELY 3,450 FEET.

1.B SEQUENCE OF MAJOR SOIL DISTURBING ACTIVITIES:

IN THE SECTION 104 EROSION CONTROL PLAN, THE CONTRACTOR SHALL PROVIDE A DETAILED SEQUENCE OF CONSTRUCTION FOR ALL CONSTRUCTION ACTIVITIES. THE CONTRACTOR SHALL FOLLOW THE SEQUENCE OF MAJOR ACTIVITIES DESCRIBED BELOW, UNLESS THE CONTRACTOR PROPOSES A DIFFERENT SEQUENCE THAT IS EQUAL OR BETTER AT CONTROLLING EROSION AND TRAPPING SEDIMENT AND IS APPROVED BY THE ENGINEER.

FOR EACH CONSTRUCTION PHASE, INSTALL PERIMETER CONTROLS AFTER CLEARING AND GRUBBING NECESSARY FOR INSTALLATION OF CONTROLS BUT BEFORE OTHER WORK FOR THE CONSTRUCTION PHASE. REMOVE PERIMETER CONTROLS ONLY AFTER ALL UPSTREAM AREAS ARE STABILIZED.

1. CLEARING AND GRUBBING EARTHWORK, UTILITIES, AND STORM DRAIN CONSTRUCTION FOR THE ROADWAY IMPROVEMENTS.
2. STORM DRAIN CONSTRUCTION. CONSTRUCT THE STORM DRAIN PIPE IN THE UPSTREAM DIRECTION.
3. EARTHWORK ASSOCIATED WITH ROADWAY, AND CONSTRUCTION OF CURB, SUBGRADE, BASE, PAVEMENT, AND SIDEWALK.

1.C AREA ESTIMATES:

TOTAL PROJECT AREA: 9.6± ACRES

TOTAL AREA TO BE DISTURBED: (TBD) ACRES

1.D RUNOFF DATA:

RUNOFF COEFFICIENTS:

BEFORE: RANGES BETWEEN 0.22 AND 0.83

DURING: RANGES BETWEEN 0.2 AND 0.83

AFTER: 0.83

SOILS DATA: THE RESULTS OF THE SOIL BORINGS ALONG THE ROADWAY ARE SHOWN IN THE SUBSURFACE SOIL EXPLORATION AND HYDROGEOLOGIC EVALUATION REPORT.

OUTFALL INFORMATION:

THERE ARE 8 EXISTING AND 3 PROPOSED OUTFALLS.

#1 DESCRIPTION: PROPOSED OUTFALL 1 (GENERAL HARRIS STREET)

LOCATION: LAT: 27°25'37"N LONG: 82°40'23"W
EST. DRAINAGE AREA SIZE: (TBD) ACRES
RECEIVING WATER NAME: OPEN CANAL CONNECTED TO SARASOTA BAY

#2 DESCRIPTION: PROPOSED OUTFALL 2 (PENFIELD STREET)

LOCATION: LAT: 27°25'36"N LONG: 82°40'16"W
EST. DRAINAGE AREA SIZE: (TBD) ACRES
RECEIVING WATER NAME: OPEN CANAL CONNECTED TO SARASOTA BAY

#3 DESCRIPTION: PROPOSED OUTFALL 3 (MARBURY LANE)

LOCATION: LAT: 27°25'40"N LONG: 82°40'18"W
EST. DRAINAGE AREA SIZE: (TBD) ACRES
RECEIVING WATER NAME: OPEN CANAL CONNECTED TO SARASOTA BAY

1.E SITE MAP:

THE CONSTRUCTION PLANS ARE BEING USED AS THE SITE MAPS. THE LOCATION OF THE REQUIRED INFORMATION IS DESCRIBED BELOW. THE SHEET NUMBERS FOR THE PLAN SHEETS REFERENCED ARE IDENTIFIED ON THE KEY SHEET OF THESE CONSTRUCTION PLANS.

- APPROXIMATE SLOPES: THE SLOPES AT THE SITE CAN BE SEEN IN THE CROSS SECTION SHEETS, PLAN SHEETS AND PROFILE SHEETS.
- AREAS OF SOIL DISTURBANCE: THE AREAS TO BE DISTURBED ARE INDICATED ON THE PLAN SHEETS, THE CROSS SECTION SHEETS, AND THE DETAIL SHEETS. ANY AREA OF NEW CONSTRUCTION WILL BE DISTURBED.
- AREAS NOT TO BE DISTURBED: THE AREAS NOT TO BE DISTURBED ARE THE EXISTING BANKS BEYOND THE LIMITS OF CONSTRUCTION ACTIVITIES.
- LOCATIONS OF TEMPORARY CONTROLS: THESE ARE SHOWN ON THE EROSION CONTROL PLAN SHEETS.
- AREAS TO BE STABILIZED: TEMPORARY STABILIZATION PRACTICES ARE SHOWN IN THE SAME LOCATION AS THE TEMPORARY CONTROLS MENTIONED ABOVE. PERMANENT STABILIZATION IS SHOWN ON THE TYPICAL SECTION SHEETS AND THE PLAN SHEETS.
- DISCHARGE POINTS TO SURFACE WATERS: THE DISCHARGE POINTS ARE SHOWN ON THE PLAN SHEETS.

1.F. RECEIVING WATERS:

SEE ITEM 1.D FOR THE OUTFALL LOCATIONS AND RECEIVING WATER NAMES.

1.G SEQUENCE OF CONSTRUCTION:

THE SEQUENCE OF CONSTRUCTION ACTIVITIES ABOVE IS A GENERAL OVERVIEW AND IS INTENDED TO CONVEY THE GENERAL CONCEPTS OF THE EROSION CONTROL DESIGN AND SHOULD NOT BE RELIED UPON FOR CONSTRUCTION PURPOSES. THE CONTRACTOR IS SOLELY RESPONSIBLE FOR DETAILED PHASING AND CONSTRUCTION SEQUENCING NECESSARY TO CONSTRUCT THE PROPOSED IMPROVEMENTS INCLUDED IN THESE PLANS. THE CONTRACTOR SHALL NOTIFY THE ENGINEER IN WRITING IMMEDIATELY PRIOR TO AND/OR DURING CONSTRUCTION IF ANY ADDITIONAL INFORMATION ON THE CONSTRUCTION SEQUENCE IS NECESSARY. THE CONTRACTOR IS SOLELY RESPONSIBLE FOR COMPLYING WITH THE REQUIREMENTS OF THE AUTHORITY HAVING JURISDICTION AND ALL OTHER APPLICABLE LAWS.

2.0 CONTROLS

2.A EROSION AND SEDIMENT CONTROLS:

IN THE SECTION 104 EROSION CONTROL PLAN, THE CONTRACTOR SHALL DESCRIBE THE PROPOSED STABILIZATION AND STRUCTURAL PRACTICES BASED ON THE CONTRACTOR'S PROPOSED TRAFFIC CONTROL PLAN. THE FOLLOWING RECOMMENDED GUIDELINES ARE BASED ON THE EROSION CONTROL PLANS OUTLINED IN THE CONSTRUCTION PLANS. THE CONTRACTOR MAY CHOOSE TO ACCEPT THE FOLLOWING GUIDELINES OR MODIFY THEM IN THE SECTION 104 EROSION CONTROL PLAN, SUBJECT TO APPROVAL OF THE ENGINEER. AS WORK PROGRESSES, THE CONTRACTOR SHALL MODIFY THE PLAN TO ADAPT TO SEASONAL VARIATION, CHANGES IN CONSTRUCTION ACTIVITIES, AND THE NEED FOR BETTER PRACTICES.

- SEDIMENT BARRIER.
- STAKED AND FLOATING TURBIDITY BARRIER.
- SANDBAGS TO CONTROL EROSION AND TRAP SILT.
- INLET PROTECTION IN ACCORDANCE WITH DESIGN STANDARD 102.
- NO HAY BALES SHALL BE USED FOR INLET PROTECTION OR IN ROADS. ONLY SYNTHETIC HAY BALES OR OTHER TYPES OF INLET PROTECTION SHALL BE USED.

PERMANENT:

- ALL SOD SHALL BE PLACED WITHIN SEVEN WORKING DAYS OF FINAL GRADING IN AREAS THAT ARE TO BE SODDED.

2.B STORMWATER MANAGEMENT:

CONTRACTOR WILL BE RESPONSIBLE FOR TAKING ALL REQUIRED MEASURES TO ENSURE THAT ALL STORMWATER RUNOFF FROM CONTRACTOR'S WORK SITE FULLY COMPLIES WITH VOLUME AND WATER QUALITY CRITERIA AS ESTABLISHED IN THE SITE-WIDE SWPPP AND ALL STORMWATER PERMITS. CONTRACTOR WILL BE REQUIRED TO IMPLEMENT ALL NECESSARY MEASURES TO ENSURE THAT STORMWATER RUNOFF FROM CONTRACTOR'S WORK SITE DOES NOT ADVERSELY IMPACT OTHER CONTRACTORS OR PROPERTY. THE CONTRACTOR MUST CLEAN ALL NEW AND EXISTING STORM STRUCTURES AND PIPES OF DEBRIS AND SEDIMENTS WHEN CONSTRUCTION IS COMPLETED. IN ADDITION, CONTRACTOR MUST CLEAN ANY OFF-SITE STRUCTURES AND PIPES OF SEDIMENT AND DEBRIS, IF THESE WERE THE RESULT OF CONSTRUCTION ACTIVITY.

2.C OTHER CONTROLS:

2.C.1 WASTE DISPOSAL:

IN THE SECTION 104 EROSION CONTROL PLAN, THE CONTRACTOR SHALL DESCRIBE THE PROPOSED METHODS TO PREVENT THE DISCHARGE OF SOLID MATERIALS, INCLUDING BUILDING MATERIALS, TO WATERS OF THE UNITED STATES. THE PROPOSED METHODS SHALL INCLUDE AT LEAST THE FOLLOWING, UNLESS OTHERWISE APPROVED BY THE ENGINEER.

- PROVIDING LITTER CONTROL AND COLLECTION WITHIN THE PROJECT DURING CONSTRUCTION ACTIVITIES.
- DISPOSING OF ALL FERTILIZER OR OTHER CHEMICAL CONTAINERS ACCORDING TO EPA'S STANDARD PRACTICES AS DETAILED BY THE MANUFACTURER.
- DISPOSING OF SOLID MATERIALS INCLUDING BUILDING AND CONSTRUCTION MATERIALS OFF THE PROJECT SITE BUT NOT IN SURFACE WATERS, OR WETLANDS.

2.C.2 OFF-SITE VEHICLE TRACKING AND DUST CONTROL:

IN THE SECTION 104 EROSION CONTROL PLAN, THE CONTRACTOR SHALL DESCRIBE THE PROPOSED METHODS FOR MINIMIZING OFFSITE VEHICLE TRACKING OF SEDIMENTS AND GENERATING DUST. THE PROPOSED METHODS SHALL INCLUDE AT LEAST THE FOLLOWING, UNLESS OTHERWISE APPROVED BY THE ENGINEER.

- COVERING LOADED HAUL TRUCKS WITH TARPAULINS.
- REMOVING EXCESS DIRT FROM PAVED AREAS DAILY.
- USING ROADWAY SWEEPERS DURING DUST GENERATING ACTIVITIES SUCH AS EXCAVATION AND MILLING OPERATIONS.

2.C.3 STATE AND LOCAL REGULATIONS FOR WASTE DISPOSAL, SANITARY SEWER, OR SEPTIC TANK REGULATIONS:

IN THE SECTION 104 EROSION CONTROL PLAN, THE CONTRACTOR SHALL DESCRIBE THE PROPOSED PROCEDURES TO COMPLY WITH THE APPLICABLE STATE AND LOCAL REGULATIONS FOR WASTE DISPOSAL AND SANITARY SEWER OR SEPTIC SYSTEMS.

2.C.4 FERTILIZERS AND PESTICIDES:

IN THE SECTION 104 EROSION CONTROL PLAN, THE CONTRACTOR SHALL DESCRIBE THE PROCEDURES FOR APPLYING FERTILIZERS AND PESTICIDES. THE PROPOSED PROCEDURES SHALL COMPLY WITH APPLICABLE SUBSECTIONS OF EITHER SECTION 570 OR 571 OF THE SPECIFICATIONS.

2.C.5 TOXIC/HAZARDOUS SUBSTANCES:

IN THE SECTION 104 EROSION CONTROL PLAN, THE CONTRACTOR SHALL PROVIDE TO THE ENGINEER AND THE OWNER'S REPRESENTATIVE CURRENT COPIES OF SAFETY DATA SHEETS (SDS'S) FOR ALL TOXIC/HAZARDOUS SUBSTANCES AND MATERIALS THAT CONTRACTOR PLANS TO USE ON THE JOB AND PROVIDE A PLAN ADDRESSING THE GENERATION, APPLICATION, MIGRATION AND STORAGE OF THESE SUBSTANCES. CONTRACTOR TO CATEGORIZE, LABEL AND TEMPORARILY STORE ALL WASTE TOXIC/HAZARDOUS SUBSTANCES FOR FURTHER MANAGEMENT AND DISPOSAL BY PROPERTY OWNER. CONTRACTOR WILL BE CHARGED FOR THE OWNER'S COSTS TO MANAGE AND DISPOSE OF ALL HAZARDOUS AND REGULATED SUBSTANCES.

2.D APPROVED STATE AND LOCAL PLANS AND PERMITS:

- SWFWMD ENVIRONMENTAL RESOURCE PERMIT

3.0 MAINTENANCE:

IN THE SECTION 104 EROSION CONTROL PLAN, THE CONTRACTOR SHALL PROVIDE A PLAN FOR MAINTAINING ALL EROSION AND SEDIMENT CONTROLS THROUGHOUT CONSTRUCTION. THE MAINTENANCE PLAN SHALL AT A MINIMUM, COMPLY WITH THE FOLLOWING:

- SILT FENCE: MAINTAIN PER SPECIFICATION SECTION 104. ANTICIPATE REPLACING SILT FENCE ON 12 MONTH INTERVALS.
- SEDIMENT BARRIERS: REMOVE SEDIMENT AS PER MANUFACTURER'S RECOMMENDATIONS OR WHEN WATER PONDS IN UNACCEPTABLE AMOUNTS OR AREAS.
- STABILIZED CONSTRUCTION ENTRANCES SHALL BE MAINTAINED TO PREVENT CLOGGING OF ROCK BEDDING WHICH MAY IMPEDE THE USEFULNESS OF THE STRUCTURE.

4.0 INSPECTIONS:

THE CONTRACTOR SHALL INSPECT THE FOLLOWING ITEMS AT LEAST ONCE EVERY SEVEN (7) CALENDAR DAYS AND WITHIN 24 HOURS OF THE END OF A STORM THAT IS 0.50 INCHES OR GREATER. TO COMPLY, THE CONTRACTOR SHALL INSTALL AND MAINTAIN RAIN GAGES AND RECORD DAILY RAINFALL. WHERE SITES HAVE BEEN PERMANENTLY STABILIZED, INSPECTIONS SHALL BE CONDUCTED AT LEAST ONCE EVERY MONTH. THE CONTRACTOR SHALL ALSO INSPECT THAT CONTROLS INSTALLED IN THE FIELD AGREE WITH THE LATEST STORMWATER POLLUTION PREVENTION PLAN.

- POINTS OF DISCHARGE TO WATERS OF THE UNITED STATES.
- POINTS OF DISCHARGE TO MUNICIPAL SEPARATE STORM DRAIN SYSTEMS.
- DISTURBED AREAS OF THE SITE THAT HAVE NOT BEEN FINALLY STABILIZED.
- AREAS USED FOR STORAGE OF MATERIALS THAT ARE EXPOSED TO PRECIPITATION.
- STRUCTURAL CONTROLS.
- STORMWATER MANAGEMENT SYSTEMS.
- LOCATIONS WHERE VEHICLES ENTER OR EXIT THE SITE.

THE CONTRACTOR SHALL INITIATE REPAIRS WITHIN 24 HOURS OF INSPECTIONS THAT INDICATE ITEMS ARE NOT IN GOOD WORKING ORDER.

IF INSPECTIONS INDICATE THAT THE INSTALLED STABILIZATION AND STRUCTURAL PRACTICES ARE NOT SUFFICIENT TO MINIMIZE EROSION, RETAIN SEDIMENT, AND PREVENT DISCHARGE POLLUTANTS, THE CONTRACTOR SHALL PROVIDE ADDITIONAL MEASURES, AS APPROVED BY THE ENGINEER.

5.0 NON–STORMWATER DISCHARGES:

IN THE SECTION 104 EROSION CONTROL PLAN, THE CONTRACTOR SHALL IDENTIFY ALL ANTICIPATED NON–STORMWATER DISCHARGES (EXCEPT FLOWS FROM FIRE FIGHTING ACTIVITIES). THE CONTRACTOR SHALL DESCRIBE THE PROPOSED MEASURES TO PREVENT POLLUTION OF THESE NON–STORMWATER DISCHARGES. IF THE CONTRACTOR ENCOUNTERS CONTAMINATED SOIL OR GROUNDWATER, CONTACT DAVE LETTERMAN, DISTRICT HAZARDOUS MATERIALS COORDINATOR, AT (888) 274–5343.

6.0 WATER QUALITY MONITORING:

6.A MONITORING FOR TURBIDITY AS MEASURED IN NEPHELOMETRIC TURBIDITY UNITS (NTUS) SHALL BE CONDUCTED FOR THE DURATION OF CONSTRUCTION ACTIVITIES. SAMPLING WILL COMMENCE 24 HOURS BEFORE INITIATION OF CONSTRUCTION ACTIVITIES, AND WILL BE CONDUCTED ACCORDING TO THE APPROVED WATER QUALITY MONITORING PLAN AS SUBMITTED BY THE CONTRACTOR. SEE THE SWFWMD ERP FOR WATER QUALITY MONITORING SITE LOCATIONS.

6.A.1 A MINIMUM OF SEVEN (7) WATER QUALITY MONITORING SITES AND FOUR (4) BACKGROUND CHECK SITES WILL BE ESTABLISHED AS SHOWN IN THE PERMIT.

6.A.2 THE BACKGROUND SITES WILL BE MARKED BY TEMPORARY BUOYS AND SHALL BE MAINTAINED FOR THE DURATION OF THE SAMPLING PROGRAM. THESE SITES CANNOT BE CHANGED WITHOUT SPECIFIC WRITTEN AUTHORIZATION FROM THE SWFWMD SARASOTA REGULATION DEPARTMENT.

6.B THE FOLLOWING INFORMATION MUST BE RECORDED FOR EACH SAMPLE TAKEN IN A MONITORING REPORT

6.B.1 SITE NUMBER;
6.B.2 DATE AND TIME OF DAY WHEN SAMPLE WAS COLLECTED;
6.B.3 TOTAL DEPTH AND SAMPLE DEATH;
6.B.4 ANTECEDENT WEATHER CONDITIONS, INCLUDING WIND DIRECTION AND VELOCITY; AND,
6.B.5 TIDAL STAGE AND/OR FLOW DIRECTION

6.C IN ADDITION TO THE DATA MENTIONED, EACH MONITORING REPORT MUST INCLUDE THE FOLLOWING:

6.C.1 A STATEMENT OF METHODOLOGY INCLUDING TYPES OF SAMPLING EQUIPMENT AND ANALYTICAL INSTRUMENTATION, PRESERVATION, AND HANDLING;
6.C.2 PERMIT NUMBER;
6.C.3 A MAP INDICATING NUMBERED LOCATIONS OF ALL SAMPLING SITES;
6.C.4 COPIES OF THE QUALITY ASSURANCE/QUALITY CONTROL LOG; AND,
6.C.5 A STATEMENT BY THE QUALITY CONTROL OFFICER AS TO THE AUTHENTICITY OF THE DATA.

6.D ALL TURBIDITY MONITORING RECORDS SHALL BE SUBMITTED TO THE SARASOTA REGULATION DEPARTMENT OF THE DISTRICT. ATTENTION ENVIRONMENTAL MANAGER WITHIN SEVEN (7) DAYS OF SAMPLE COLLECTION. ALL CORRESPONDENCE SHOULD INCLUDE THE PERMITTEE NAME AND PERMIT NUMBER. FAILURE TO SUBMIT REPORTS IN A TIMELY MANNER CONSTITUTES A VIOLATION OF THE PERMIT AND MAY BE GROUNDS FOR REVOCATION.

6.E THE FOLLOWING QA/QC PROTOCOL IS REQUIRED FOR EACH SAMPLE COLLECTED:

6.E.1 ALL TURBIDITY ANALYSIS SHALL BE PERFORMED ON INSTRUMENTS THAT CAN PERFORM NEPHELOMETRIC MEASUREMENTS;
6.E.2 THE INSTRUMENT MUST BE CALIBRATED EACH MORNING AND EACH TIME THE INSTRUMENT IS TURNED ON, AND RECALIBRATED EVERY FOUR HOURS THEREAFTER;
6.E.3 CALIBRATION MUST BE PERFORMED AGAINST A BLANK SAMPLE AND AT LEASE ONE FORMALIN OR GEL–TYPE STANDARD. THE STANDARD VALUE SHOULD BE IN THE SAME RANGE AS THE SAMPLE READINGS;
6.E.4 ALL CALIBRATION PROCEDURES MUST BE RECORDED IN A PERMANENT LOGBOOK, AND COPIES MUST BE SUBMITTED WITH THE DATA; AND,
6.E.5 DATE AND TIME OF COLLECTION, DATE AND TIME OF ANALYSES, WARM–UP TIME, AND THE NAME OF THE ANALYST MUST BE INCLUDED IN THE LOG.

6.F IF NTU'S EXCEED BACKGROUND AMBIENT WATER QUALITY, ALL CONSTRUCTION ACTIVITIES SHALL IMMEDIATELY CEASE. ANY VIOLATIONS SHALL BE IMMEDIATELY REPORTED TO THE DISTRICT AT (941) 377–3722. THE VIOLATION REPORT SHALL INCLUDE THE DESCRIPTION OF THE CORRECTIVE ACTIONS BEING TAKEN OR PROPOSED TO BE TAKEN. IF VIOLATIONS ARE NOTED AFTER NORMAL BUSINESS HOURS, ON HOLIDAYS OR ON WEEKENDS, THE REPORT SHALL BE MADE TO THE DISTRICT AS SOON AS NORMAL BUSINESS HOURS RESUME. A COPY OF ALL MONITORING DATA SHEETS, WHICH INDICATED VIOLATIONS, SHALL BE FORWARDED IMMEDIATELY TO THE SARASOTA REGULATION DEPARTMENT OF THE DISTRICT, ATTENTION ENVIRONMENTAL MANAGER AND INCLUDE A COPY TO (SWFWMD) AND THE TOWN OF LONGBOAT KEY.

6.G WHEN A TURBIDITY VIOLATION IS FOUND, CONSTRUCTION OPERATIONS MAY NOT RESUME UNTIL A COMPLIANCE INSPECTION BY DISTRICT PERSONNEL HAS BEEN CONDUCTED AND A SET OF SAMPLES HAS BEEN TAKEN WHICH DEMONSTRATES THAT WATER QUALITY STANDARDS DESIGNATED ABOVE ARE NO LONGER EXCEEDED. INTERIM SAMPLES TAKEN FOLLOWING THE VIOLATION SHALL BE TAKEN IN THE SAME MANNER AS THE ROUTINE MONITORING AND THE SAME LOCATIONS. IF SAMPLES DEMONSTRATE THE WATER QUALITY STANDARDS SPECIFIED ABOVE FOR TURBIDITY ARE STILL BEING VIOLATED, SAMPLING SHALL CONTINUE AT TWO–HOUR INTERVALS UNTIL THE INTERIM SAMPLE DEMONSTRATES THAT NO VIOLATION IS OCCURRING.

6.H FAILURE TO REPORT VIOLATIONS OR TO FOLLOW CORRECT PROCEDURES BEFORE RESUMING WORK WILL CONSTITUTE GROUNDS FOR REVOCATION OF THE DISTRICT PERMIT AND MAY ALSO RENDER THE PERMITTEE SUBJECT TO ENFORCEMENT ACTION.

7.0 TRACKING AND REPORTING:

7.A THE CONTRACTOR SHALL SUBMIT A WEEKLY REPORT TO THE TOWN OF LONGBOAT KEY DOCUMENTING THE DAILY INSPECTIONS AND MAINTENANCE OR REPAIRS TO THE EROSION AND SEDIMENT CONTROL DEVICES. THE CONTRACTOR SHALL MAINTAIN ALL REQUIRED REPORTS AND COMPLETE ALL SWPPP INSPECTION FORMS.

7.B PREPARATION OF ALL THE CONTRACTOR'S REPORTS OF INSPECTION, MAINTENANCE AND REPAIRS REQUIRED FOR THE CONTROL AND ABATEMENT OF EROSION AND WATER POLLUTION, SHALL BE INCLUDED IN THE INDIVIDUAL COSTS OF THE EROSION AND SEDIMENT CONTROL DEVICES OF THE PROJECT.

7.C THE CONTRACTOR SHALL USE THE FDOT'S STANDARD SWPPP CONSTRUCTION INSPECTION REPORT FORM #650–040–03, FOR DAILY INSPECTIONS.

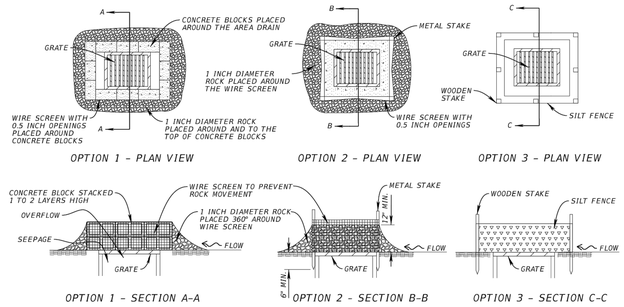

DITCH BOTTOM INLET PROTECTION

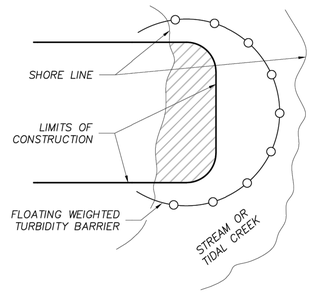

NOTE: TURBIDITY BARRIERS FOR FLOWING STREAMS AND TIDAL CREEKS MAY BE EITHER FLOATING, STAKED TYPES OR ANY COMBINATION THAT WILL SUIT THE SITES CONDITION AND MEET EROSION CONTROL AND WATER QUALITY REQUIREMENTS. THE BARRIER TYPE(S) WILL BE AT THE CONTRACTORS OPTION UNLESS OTHERWISE SPECIFIED IN THE PLANS. HOWEVER, PAYMENT WILL BE UNDER THE PAY ITEM(S) ESTABLISHED IN THE PLANS FOR THE FLOATING TURBIDITY BARRIER. POSTS IN STAKED TURBIDITY BARRIERS TO BE INSTALLED IN VERTICAL POSITION UNLESS OTHERWISE DIRECTED BY THE ENGINEER.

TURBIDITY DETAIL FOR SEDIMENTATION CONTROL

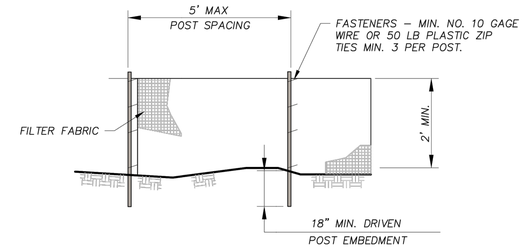

ELEVATION

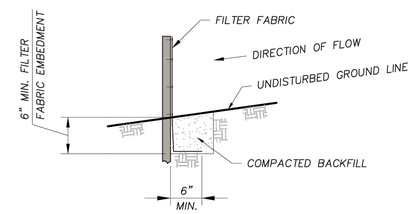

FABRIC ANCHOR DETAIL

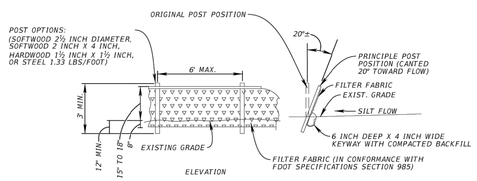

TYPE III SILT FENCE DETAIL

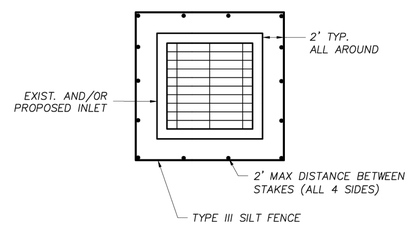

NOTE: SEE TYPE III SILT FENCE FOR ADDITIONAL INSTALLATION REQUIREMENTS.

SILT FENCE PROTECTION AROUND DITCH BOTTOM INLETS

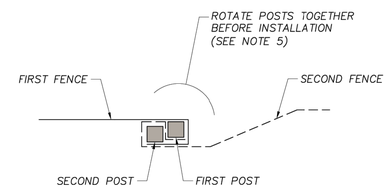

SPLICE DETAIL – PLAN VIEW

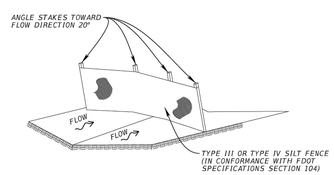

SILT FENCE CHECK DAM

NOTES FOR SILT FENCES:

1. TEMPORARY SILT FENCE SHALL BE INSTALLED PRIOR TO ANY GRADING WORK IN THE AREA TO BE PROTECTED. FENCE SHALL BE MAINTAINED THROUGHOUT THE CONSTRUCTION PERIOD AND REMOVED IN CONJUNCTION WITH THE FINAL GRADING AND SITE STABILIZATION.
2. TYPE III SILT FENCE TO BE USED AT MOST LOCATIONS.
3. DO NOT CONSTRUCT SILT FENCES ACROSS PERMANENT FLOWING WATERCOURSES. SILT FENCES ARE TO BE AT UPLAND LOCATIONS AND TURBIDITY BARRIERS USED AT PERMANENT BODIES OF WATER.
4. WHERE USED AS SLOPE PROTECTION, SILT FENCE IS TO CONSTRUCTED ON 0% LONGITUDINAL GRADE TO AVOID CHANNEL RUNOFF ALONG THE LENGTH OF THE FENCE
5. WHEN SPLICES ARE NECESSARY MAKE SPLICE AT POST ACCORDING TO SPLICE DETAIL. PLACE THE END POST OF THE SECOND FENCE INSIDE THE END POST OF THE FIRST FENCE. ROTATE BOTH POSTS TOGETHER AT LEAST 180 DEGREES TO CREATE A TIGHT SEAL WITH THE FABRIC MATERIAL. CUT THE FABRIC NEAR THE BOTTOM OF THE POSTS TO ACCOMMODATE THE 6 INCH FLAP. THEN DRIVE BOTH POSTS AND BURY THE FLAP. COMPACT BACKFILL WELL.

NO.	DATE:	REVISION

10/8/2026 3:33:49 PM

INFRASTRUCTURE SOLUTION SERVICES
An HR Green Company
7319 Merchant Court
Sarasota, FL 34240
Phone: (941) 526-0813
FBPE CA# 29992

TOWN OF LONGBOAT KEY
PUBLIC WORKS DEPARTMENT
600 GENERAL HARRIS STREET
LONGBOAT KEY, FL 34228
PHONE (941) 316-1988

SLEEPY LAGOON
GENERAL HARRIS, PENFIELD, MARBURY

DRAWING TITLE: **EROSION CONTROL DETAILS**

PROJ. MGR.:	DRWN. BY:	CHKD. BY:	PROJECT NO.:
DMB	WSH	MWM	LBK003
SCALE: N.T.S.	DATE: 05/15/2026		SHEET NO.: 50 OF 56

Z:\Projects\Sarasota Region\Longboat Key, Town of\LBK003 – 2504561 – Sleepy Lagoon Gen Harris, Penfield, Marbury\Drawings\ISS DWG\2 Eng\Final Dwg\LBK003 – 16 – EC_DETAILS_PLAN.dwg

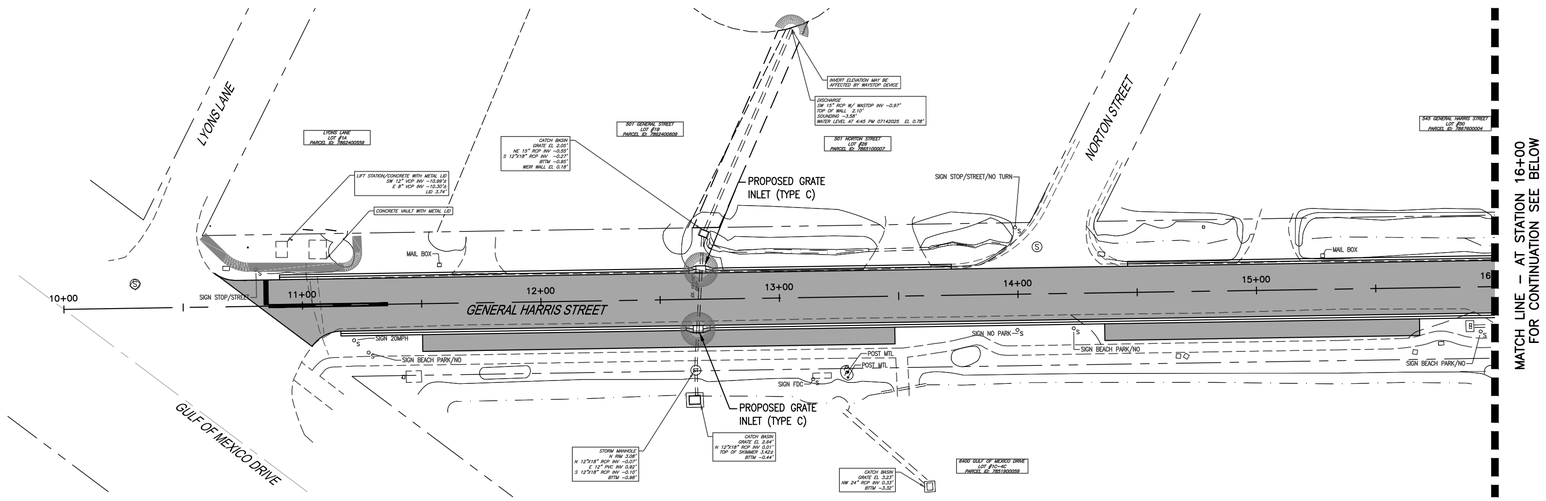

GENERAL HARRIS STREET

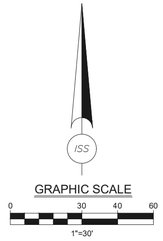

BMP LEGEND

PROPOSED BMP DEVICE LOCATION

PROPOSED FLOATING TURBIDITY BARRIER ADJACENT TO SEAWALL

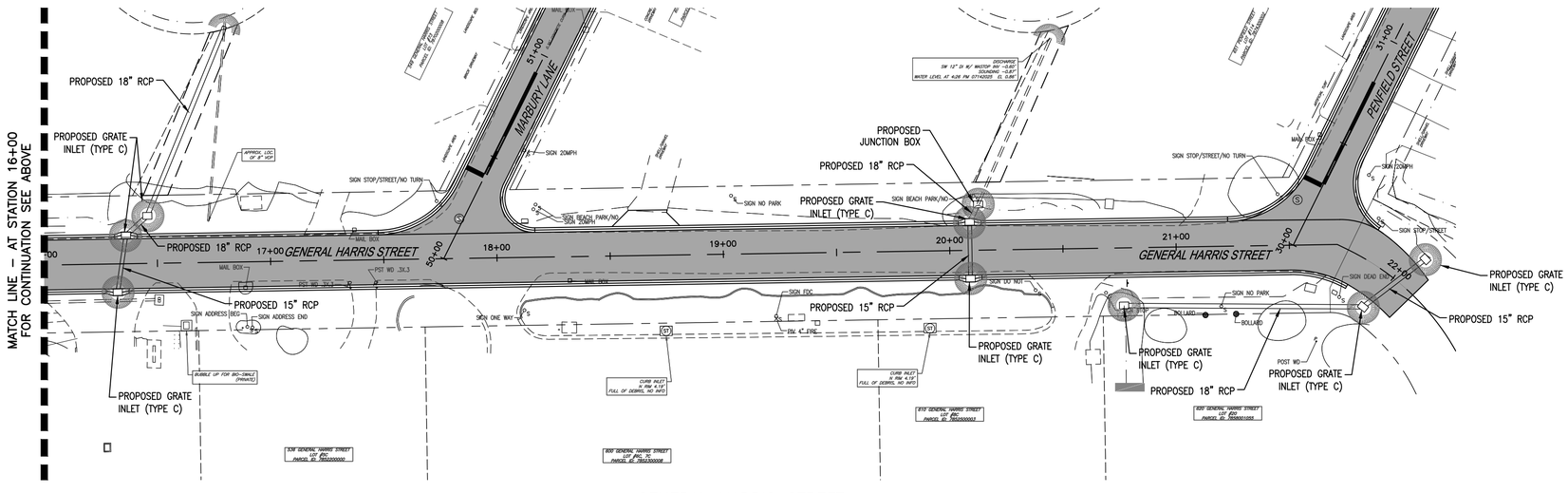

GENERAL HARRIS STREET

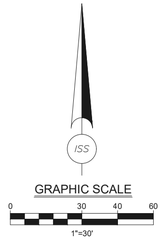

NO.	DATE:	REVISION

10/8/2026 3:36:14 PM

INFRASTRUCTURE SOLUTION SERVICES
An HR Green Company

7319 Merchant Court
Sarasota, FL 34240
Phone: (941) 526-0813
FBPE CA# 29992

TOWN OF LONGBOAT KEY
PUBLIC WORKS DEPARTMENT
600 GENERAL HARRIS STREET
LONGBOAT KEY, FL 34228
PHONE (941) 316-1988

SLEEPY LAGOON
GENERAL HARRIS, PENFIELD, MARBURY

DRAWING TITLE: **EROSION CONTROL DETAILS**

PROJ. MGR.:	DRWN. BY:	CHKD. BY:	PROJECT NO.:
DMB	WSH	MWM	LBK003
SCALE: 1" = 30'	DATE: 05/15/2026		SHEET NO.: 50 OF 56

Z:\Projects\Sarasota Region\Longboat Key, Town of\LBK003 – 2504561 – Sleepy Lagoon Gen Harris, Penfield, Marbury\Drawings\ISS DWG\2 Eng\Final Dwg\LBK003 – 16 – EC_DETAILS_PLAN.dwg

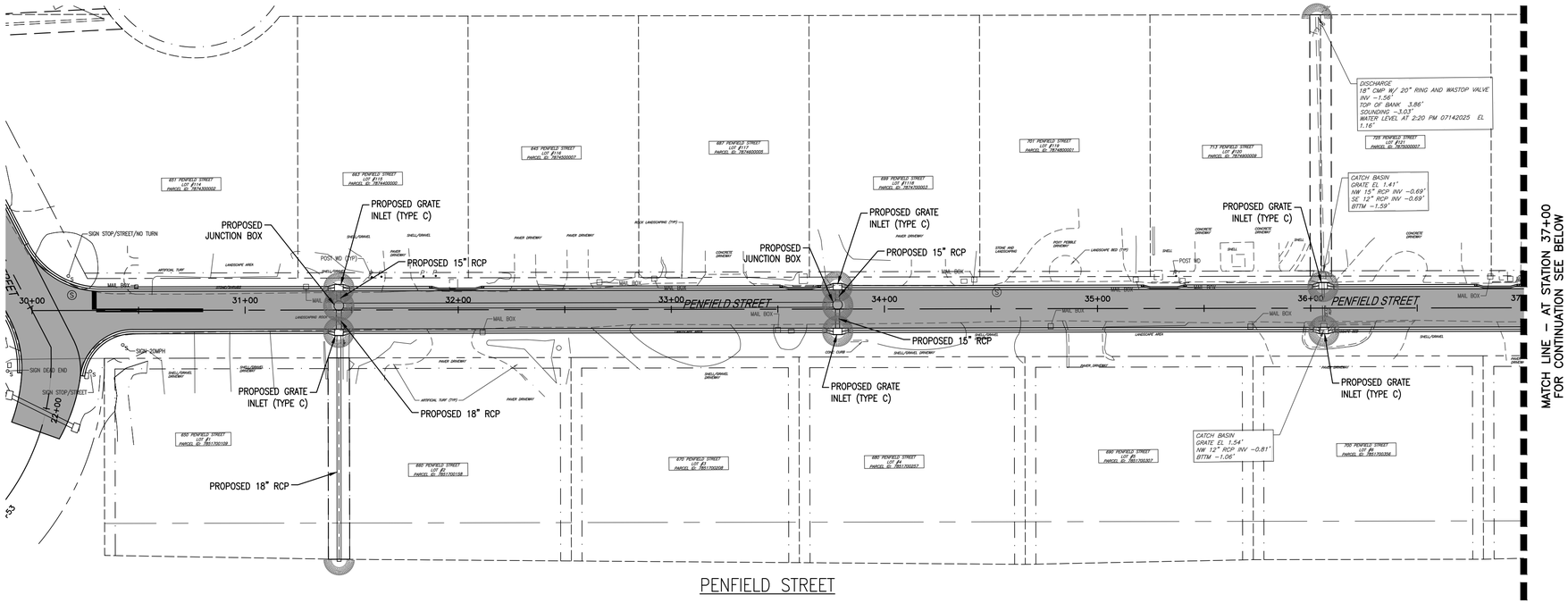

PENFIELD STREET

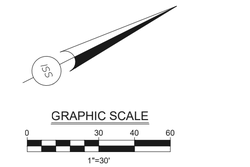

BMP LEGEND

- PROPOSED BMP DEVICE LOCATION
- PROPOSED FLOATING TURBIDITY BARRIER ADJACENT TO SEAWALL

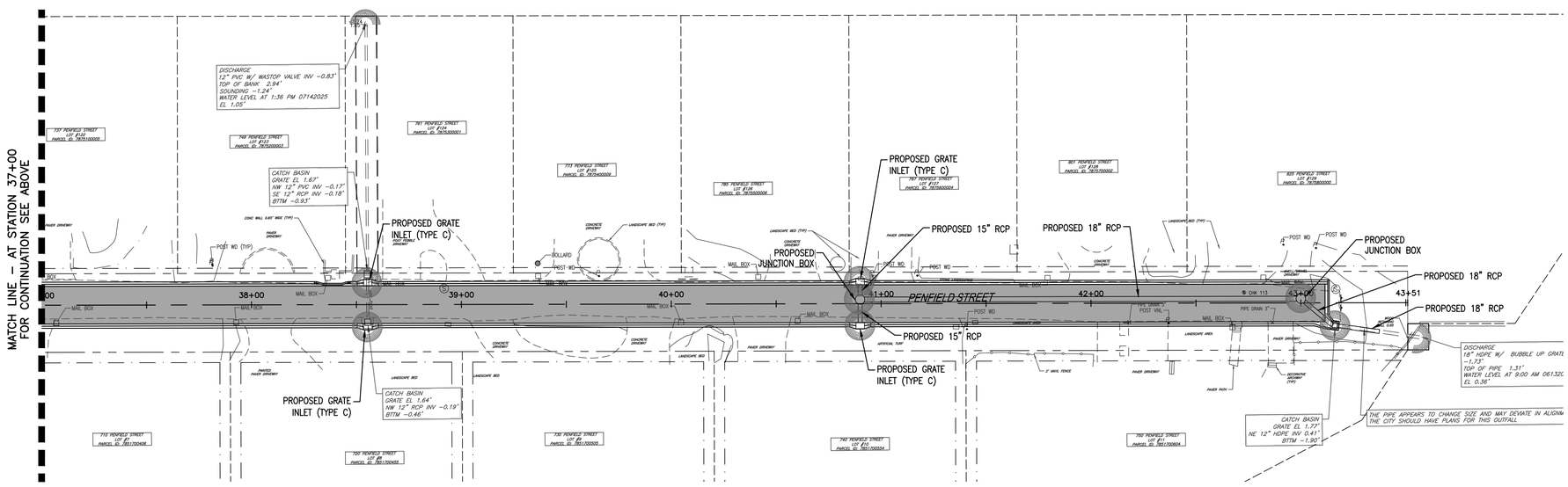

PENFIELD STREET

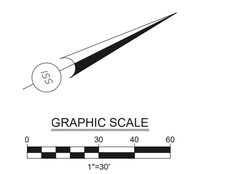

NO.	DATE:	REVISION

INFRASTRUCTURE SOLUTION SERVICES
An HR Green Company

7319 Merchant Court
Sarasota, FL 34240
Phone: (941) 526-0813
FBPE CA# 29992

TOWN OF LONGBOAT KEY
PUBLIC WORKS DEPARTMENT
600 GENERAL HARRIS STREET
LONGBOAT KEY, FL 34228
PHONE (941) 316-1988

SLEEPY LAGOON
GENERAL HARRIS, PENFIELD, MARBURY

DRAWING TITLE: **EROSION CONTROL PLAN**

PROJ. MGR.:	DRWN. BY:	CHKD. BY:	PROJECT NO.:
DMB	WSH	MWM	LBK003
SCALE: 1" = 30'	DATE: 05/15/2026		SHEET NO.: 52 OF 56

10/8/2026 3:29:22 PM

Z:\Projects\Sarasota Region\Longboat Key, Town of\LBK003 – 2504561 – Sleepy Lagoon Gen Harris, Penfield, Marbury\Drawings\ISS DWG\2 Eng\Final Dwg\LBK003 – 16 – EC_DETAILS_PLAN.dwg

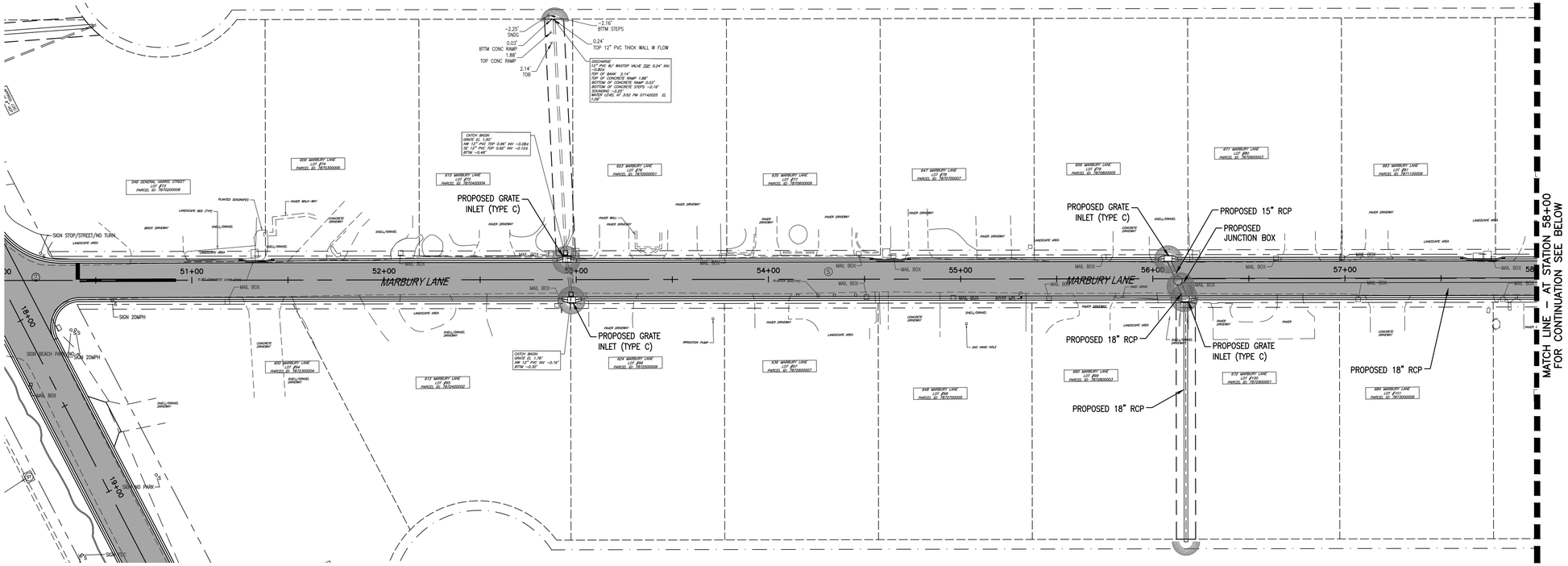

MARBURY LANE

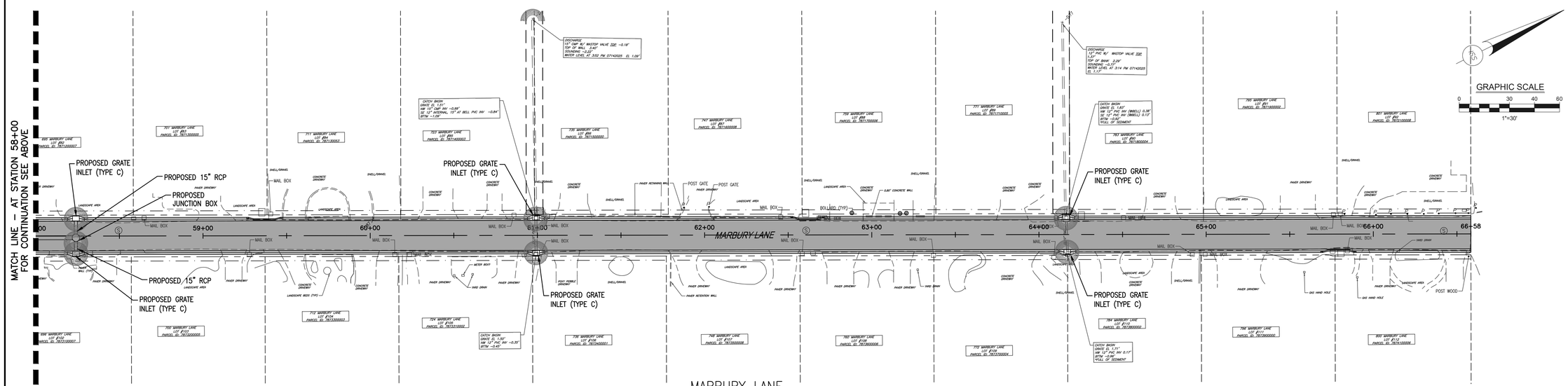

MARBURY LANE

GRAPHIC SCALE

0 30 40 60

1"=30'

BMP LEGEND

PROPOSED BMP DEVICE LOCATION

PROPOSED FLOATING TURBIDITY BARRIER ADJACENT TO SEAWALL

NO.	DATE:	REVISION

10/8/2026 3:21:06 PM

INFRASTRUCTURE SOLUTION SERVICES

An HR Green Company

7319 Merchant Court
Sarasota, FL 34240
Phone: (941) 526-0813
FBPE CA# 29992

TOWN OF LONGBOAT KEY
PUBLIC WORKS DEPARTMENT
600 GENERAL HARRIS STREET
LONGBOAT KEY, FL 34228
PHONE (941) 316-1988

SLEEPY LAGOON
GENERAL HARRIS, PENFIELD, MARBURY

DRAWING TITLE: **EROSION CONTROL PLAN**

PROJ. MGR.:	DRWN. BY:	CHKD. BY:	PROJECT NO.:
DMB	WSH	MWM	LBK003
SCALE: 1" = 30'	DATE: 05/15/2026		SHEET NO.: 53 OF 56

Z:\Projects\Sarasota Region\Longboat Key, Town of\LBK003 – 2504561 – Sleepy Lagoon Gen Harris, Penfield, Marbury\Drawings\ISS DWG\2 Eng\Final Dwg\LBK003 – 16 – EC_DETAILS_PLAN.dwg

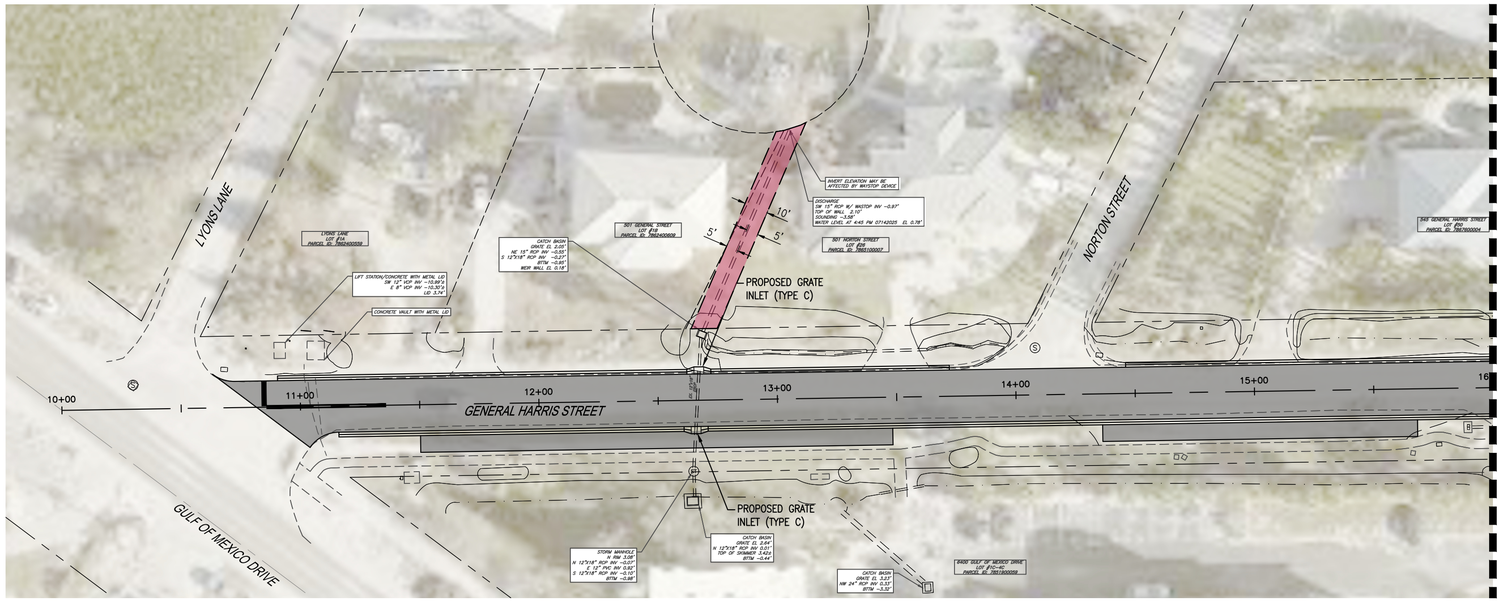

GENERAL HARRIS STREET

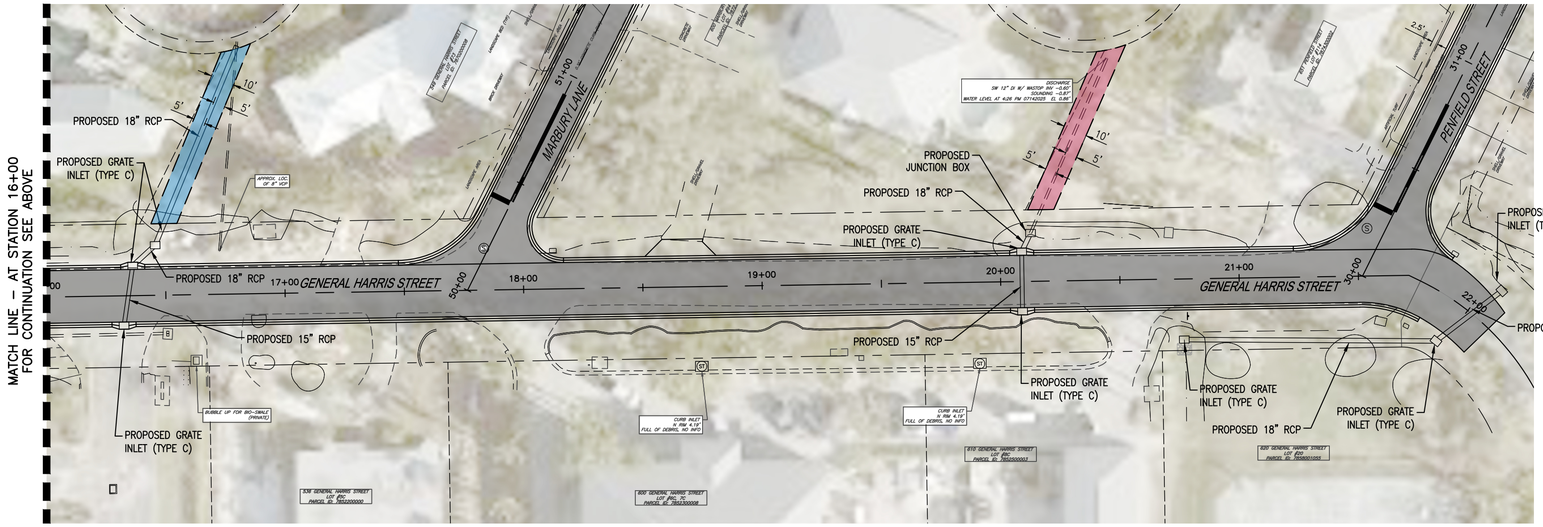

GENERAL HARRIS STREET

GRAPHIC SCALE

0 30 40 60

1"=30'

LEGEND

- PROPOSED EASEMENT FOR EXISTING FACILITIES
- PROPOSED EASEMENT FOR PROPOSED FACILITIES
- EXISTING EASEMENT

NO.	DATE:	REVISION

INFRASTRUCTURE SOLUTION SERVICES

An HR Green Company

7319 Merchant Court
Sarasota, FL 34240
Phone: (941) 526-0813
FBPE CA# 29992

TOWN OF LONGBOAT KEY
PUBLIC WORKS DEPARTMENT
600 GENERAL HARRIS STREET
LONGBOAT KEY, FL 34228
PHONE (941) 316-1988

SLEEPY LAGOON
GENERAL HARRIS, PENFIELD, MARBURY

DRAWING TITLE: **EASEMENT PLAN**

PROJ. MGR.:	DRWN. BY:	CHKD. BY:	PROJECT NO.:
DMB	WSH	MWM	LBK003
SCALE: 1" = 30'	DATE: 05/15/2026		SHEET NO.: 54 OF 56

10/16/2026 3:35:40 PM

Z:\Projects\Sarasota Region\Longboat Key, Town of\LBK003 – 2504561 – Sleepy Lagoon Gen Harris, Penfield, Marbury\Drawings\ISS DWG\2 Eng\Final Dwg\LBK003 – 17 – ESMT_PLAN.dwg

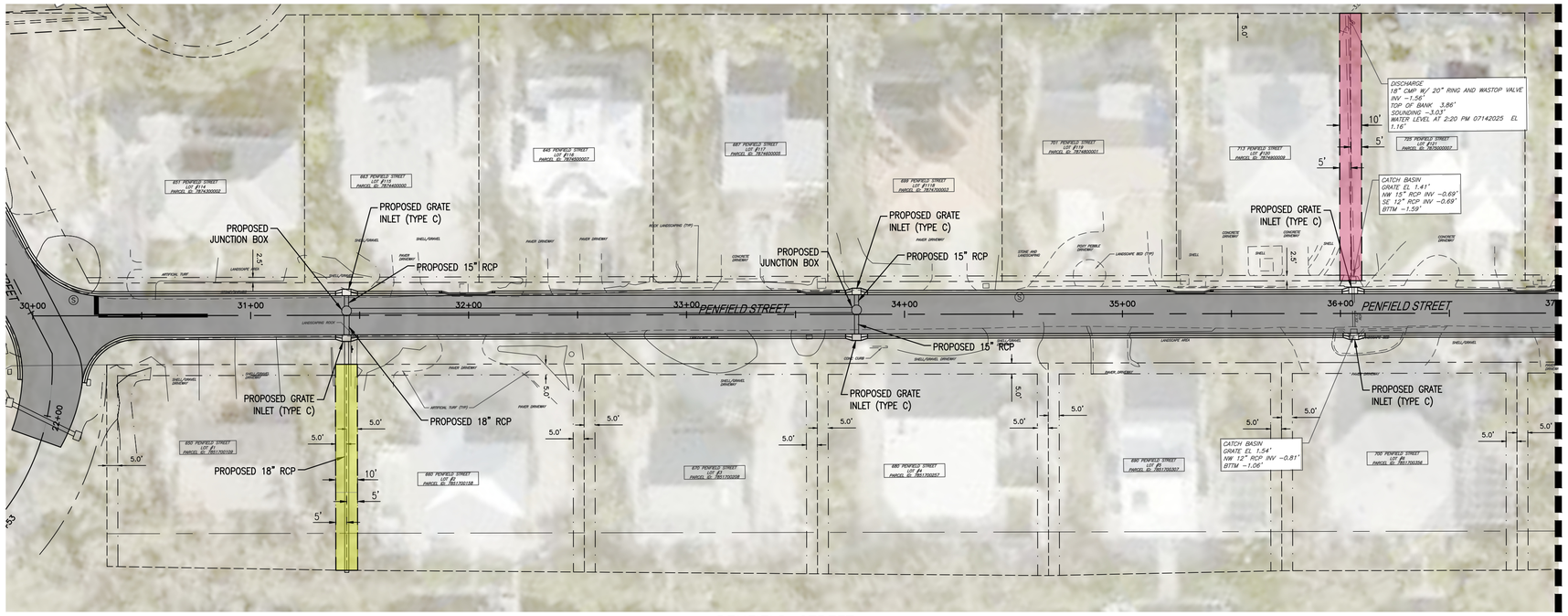

PENFIELD STREET

GRAPHIC SCALE

0 30 40 60

1"=30'

LEGEND

- PROPOSED EASEMENT FOR EXISTING FACILITIES
- PROPOSED EASEMENT FOR PROPOSED FACILITIES
- EXISTING EASEMENT

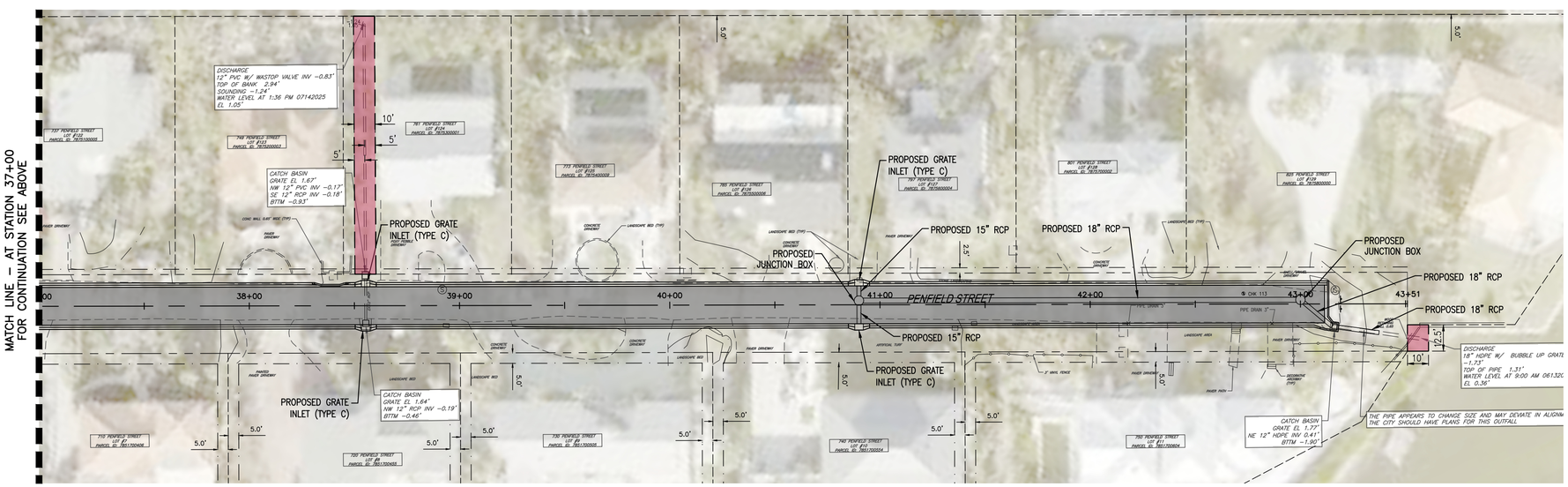

PENFIELD STREET

GRAPHIC SCALE

0 30 40 60

1"=30'

LEGEND

- PROPOSED EASEMENT FOR EXISTING FACILITIES
- PROPOSED EASEMENT FOR PROPOSED FACILITIES
- EXISTING EASEMENT

NO.	DATE:	REVISION

10/8/2026 3:24:03 PM

INFRASTRUCTURE SOLUTION SERVICES

An HR Green Company

7319 Merchant Court
Sarasota, FL 34240
Phone: (941) 526-0813
FBPE CA# 29992

TOWN OF LONGBOAT KEY
PUBLIC WORKS DEPARTMENT
600 GENERAL HARRIS STREET
LONGBOAT KEY, FL 34228
PHONE (941) 316-1988

SLEEPY LAGOON
GENERAL HARRIS, PENFIELD, MARBURY

DRAWING TITLE: **EASEMENT PLAN**

PROJ. MGR.:	DRWN. BY:	CHKD. BY:	PROJECT NO.:
DMB	WSH	MWM	LBK003
SCALE: 1" = 30'	DATE: 05/15/2026		SHEET NO.: 55 OF 56

Z:\Projects\Sarasota Region\Longboat Key, Town of\LBK003 – 2504561 – Sleepy Lagoon Gen Harris, Penfield, Marbury\Drawings\ISS DWG\2 Eng\Final Dwg\LBK003 – 17 – ESMT_PLAN.dwg

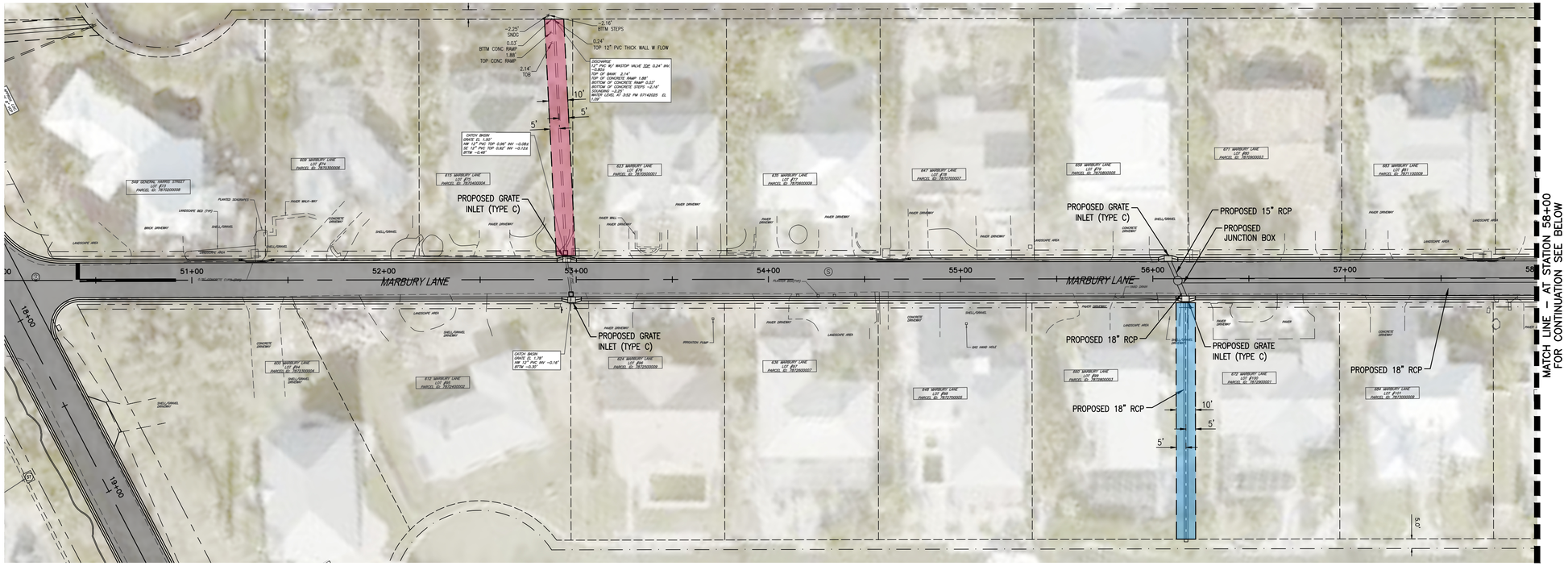

MARBURY LANE

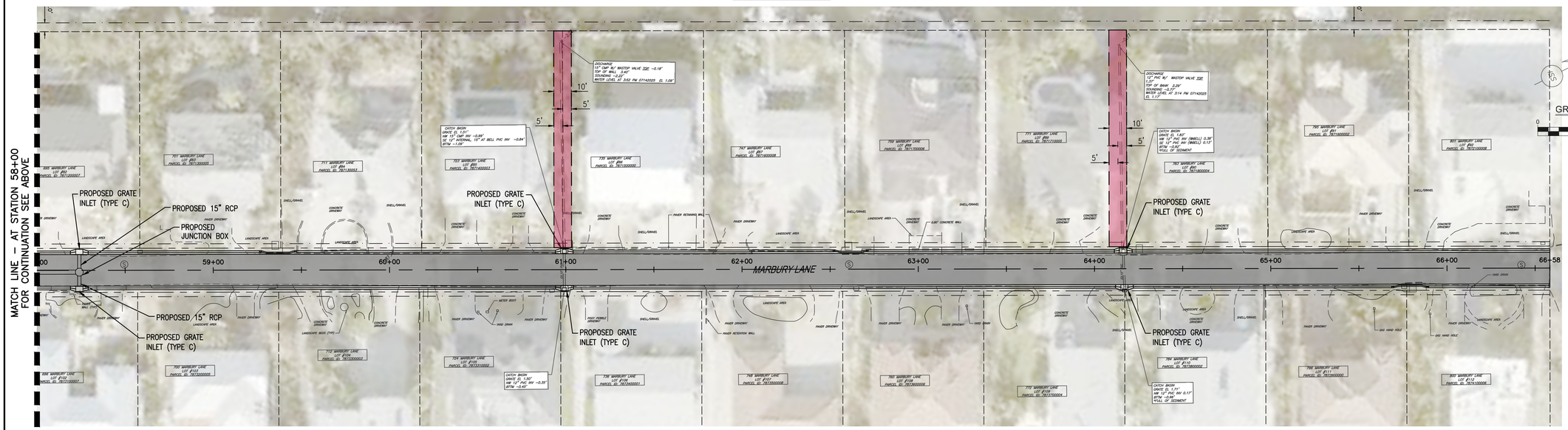

MARBURY LANE

GRAPHIC SCALE

0 30 40 60

1"=30'

LEGEND

- PROPOSED EASEMENT FOR EXISTING FACILITIES
- PROPOSED EASEMENT FOR PROPOSED FACILITIES
- EXISTING EASEMENT

NO.	DATE:	REVISION

10/8/2026 3:21:39 PM

INFRASTRUCTURE SOLUTION SERVICES

An HR Green Company

7319 Merchant Court
Sarasota, FL 34240
Phone: (941) 526-0813
FBPE CA# 29992

TOWN OF LONGBOAT KEY
PUBLIC WORKS DEPARTMENT
600 GENERAL HARRIS STREET
LONGBOAT KEY, FL 34228
PHONE (941) 316-1988

SLEEPY LAGOON
GENERAL HARRIS, PENFIELD, MARBURY

DRAWING TITLE: **EASEMENT PLAN**

PROJ. MGR.:	DRWN. BY:	CHKD. BY:	PROJECT NO.:
DMB	WSH	MWM	LBK003
SCALE: 1" = 30'	DATE: 05/15/2026		SHEET NO.: 56 OF 56

Z:\Projects\Sarasota Region\Longboat Key, Town of\LBK003 – 2504561 – Sleepy Lagoon Gen Harris, Penfield, Marbury\Drawings\ISS DWG\2 Eng\Final Dwg\LBK003 – 17 – ESMT_PLAN.dwg